This is a digital copy of a book that was preserved for generations on library shelves before it was carefully scanned by Google as part of a project to make the world's books discoverable online.

It has survived long enough for the copyright to expire and the book to enter the public domain. A public domain book is one that was never subject to copyright or whose legal copyright term has expired. Whether a book is in the public domain may vary country to country. Public domain books are our gateways to the past, representing a wealth of history, culture and knowledge that's often difficult to discover.

Marks, notations and other marginalia present in the original volume will appear in this file - a reminder of this book's long journey from the publisher to a library and finally to you.

Usage guidelines

Google is proud to partner with libraries to digitize public domain materials and make them widely accessible. Public domain books belong to the public and we are merely their custodians. Nevertheless, this work is expensive, so in order to keep providing this resource, we have taken steps to prevent abuse by commercial parties, including placing technical restrictions on automated querying.

We also ask that you:

+ *Make non-commercial use of the files* We designed Google Book Search for use by individuals, and we request that you use these files for personal, non-commercial purposes.

+ *Refrain from automated querying* Do not send automated queries of any sort to Google's system: If you are conducting research on machine translation, optical character recognition or other areas where access to a large amount of text is helpful, please contact us. We encourage the use of public domain materials for these purposes and may be able to help.

+ *Maintain attribution* The Google "watermark" you see on each file is essential for informing people about this project and helping them find additional materials through Google Book Search. Please do not remove it.

+ *Keep it legal* Whatever your use, remember that you are responsible for ensuring that what you are doing is legal. Do not assume that just because we believe a book is in the public domain for users in the United States, that the work is also in the public domain for users in other countries. Whether a book is still in copyright varies from country to country, and we can't offer guidance on whether any specific use of any specific book is allowed. Please do not assume that a book's appearance in Google Book Search means it can be used in any manner anywhere in the world. Copyright infringement liability can be quite severe.

About Google Book Search

Google's mission is to organize the world's information and to make it universally accessible and useful. Google Book Search helps readers discover the world's books while helping authors and publishers reach new audiences. You can search through the full text of this book on the web at `http://books.google.com/`

HARVARD LAW

REPORTS OF THE SUPREME COURT

OF THE

UNITED STATES.

United States Supreme Court

UNITED STATES REPORTS.

SUPREME COURT.

VOL. 97.

CASES

ARGUED AND ADJUDGED

IN

THE SUPREME COURT

OF

THE UNITED STATES.

OCTOBER TERM, 1877.
OCTOBER TERM, 1878.

REPORTED BY

WILLIAM T. OTTO.

VOL. VII.

BOSTON:
LITTLE, BROWN, AND COMPANY.
1879.

Entered according to Act of Congress, in the year 1879, by
LITTLE, BROWN, AND COMPANY,
In the Office of the Librarian of Congress, at Washington.

CAMBRIDGE:
UNIVERSITY PRESS: JOHN WILSON AND SON.

JUSTICES

OF THE

SUPREME COURT OF THE UNITED STATES

DURING THE TIME OF THESE REPORTS.

CHIEF JUSTICE.

HON. MORRISON R. WAITE.

ASSOCIATES.

Hon. Nathan Clifford.	Hon. Noah H. Swayne.
Hon. Samuel F. Miller.	Hon. Stephen J. Field.
Hon. William Strong.	Hon. Joseph P. Bradley.
Hon. Ward Hunt.	Hon. John M. Harlan.

ATTORNEY-GENERAL.

Hon. Charles Devens.

SOLICITOR-GENERAL.

Hon. Samuel Field Phillips.

CLERK.

Daniel Wesley Middleton, Esquire.

ALLOTMENT, ETC., OF THE JUSTICES

OF THE

SUPREME COURT OF THE UNITED STATES,

As made April 22, 1878, under the Acts of Congress of July 23, 1866, and March 2, 1867.

NAME OF THE JUSTICE, AND STATE FROM WHENCE APPOINTED.	NUMBER AND TERRITORY OF THE CIRCUIT.	DATE OF COMMISSION, AND BY WHOM APPOINTED.
CHIEF JUSTICE.		
Hon. M. R. WAITE, Ohio.	FOURTH. Maryland, West Virginia, Virginia, N. Carolina, and S. Carolina.	1874. Jan. 21. President Grant.
ASSOCIATES.		
Hon. N. CLIFFORD, Maine.	FIRST. Maine, New Hampshire, Massachusetts, and Rhode Island.	1858. Jan. 12. President Buchanan.
Hon. WARD HUNT, New York.	SECOND. New York, Vermont, and Connecticut.	1872. Dec. 11. President Grant.
Hon. WM. STRONG, Pennsylvania.	THIRD. Pennsylvania, New Jersey, and Delaware.	1870. Feb. 18. President Grant.
Hon. J. P. BRADLEY, New Jersey.	FIFTH. Georgia, Florida, Alabama, Mississippi, Louisiana, and Texas.	1870. March 21. President Grant.
Hon. N. H. SWAYNE, Ohio.	SIXTH. Ohio, Michigan, Kentucky, & Tennessee.	1862. Jan. 24. President Lincoln.
Hon. J. M. HARLAN, Kentucky.	SEVENTH. Indiana, Illinois, and Wisconsin.	1877. Nov. 29. President Hayes.
Hon. S. F. MILLER, Iowa.	EIGHTH. Minnesota, Iowa, Missouri, Kansas, Arkansas, & Nebraska.	1862. July 16. President Lincoln.
Hon. S. J. FIELD, California.	NINTH. California, Oregon, and Nevada.	1863. March 10. President Lincoln.

GENERAL RULES.

Rule 30.

"In cases where appeals of the character mentioned in Rule 93, regulating equity practice, have already been taken, this court will, after the cause has been docketed, entertain an application for a suspension or modification of the injunction, based upon a statement of the facts affecting the application by a justice or judge who took part in the decision. All such applications must be printed and submitted on briefs. No oral arguments will be heard, unless specially ordered."

[Promulgated Jan. 13, 1879.]

AMENDMENT TO GENERAL RULES.

Amendment to Rule 6.

"There may be united, with a motion to dismiss a writ of error or appeal, a motion to affirm, on the ground that, although the record may show that this court has jurisdiction, it is manifest the appeal or writ was taken for delay only, or that the question on which the jurisdiction depends is so frivolous as not to need further argument."

[Promulgated Nov. 4, 1878.]

RULES OF PRACTICE IN EQUITY.

Rule 93.

"When an appeal from a final decree in an equity suit, granting or dissolving an injunction, is allowed by a justice or judge who took part in the decision of the cause, he may, in his discretion, at the time of such allowance, make an order suspending or modifying the injunction during the pendency of the appeal, upon such terms as to bond or otherwise as he may consider proper for the security of the rights of the opposite party."

[Promulgated Jan. 13, 1879.]

AMENDMENTS TO RULES OF PRACTICE IN EQUITY.

Bills taken pro confesso.

18.

"It shall be the duty of the defendant, unless the time shall be otherwise enlarged, for cause shown, by a judge of the court, upon motion for that purpose, to file his plea, demurrer, or answer to the bill, in the clerk's office, on the rule-day next succeeding that of entering his appearance. In default thereof, the plaintiff may, at his election, enter an order (as of course) in the order-book that the bill be taken *pro confesso;* and thereupon the cause shall be proceeded in *ex parte*, and the matter of the bill may be decreed by the court at any time after the expiration of thirty days from and after the entry of said order, if the same can be done without an answer, and is proper to be decreed; or the plaintiff, if he requires any discovery or answer to enable him to obtain a proper decree, shall be entitled to process of attachment against the defendant to compel an answer, and the defendant shall not, when arrested upon such process, be discharged therefrom, unless upon filing his answer, or otherwise complying with such order as the court or a judge thereof may direct, as to pleading to or fully answering the bill, within a period to be fixed by the court or judge, and undertaking to speed the cause."

19.

"When the bill is taken *pro confesso*, the court may proceed to a decree at any time after the expiration of thirty days from and after the entry of the order to take the bill *pro confesso*, and such decree rendered shall be deemed absolute, unless the court shall, at the same term, set aside the same, or enlarge the time for filing the answer, upon cause shown, upon motion and affidavit of the defendant. And no such motion shall be granted, unless upon the payment of the costs of the plaintiff in the suit up to that time, or such part thereof as the court shall deem reasonable, and unless the defendant shall undertake to file his answer within such time as the court shall direct, and submit to such other terms as the court shall direct, for the purpose of speeding the cause."

[Promulgated Oct. 28, 1878.]

APPEALS FROM THE COURT OF CLAIMS.

Substitute for Rule 5.

"In every such case, each party, at such time before trial and in such form as the court may prescribe, shall submit to it a request to find all the facts which the party considers proven and deems material to the due presentation of the case in the finding of facts."

[Promulgated Jan. 29, 1879.]

TABLE OF CASES.

	Page
"Agnese," The, and the "Virginia Ehrman"	309
Allis *v.* Insurance Company	144
Arthur *v.* Moller	865
Ashcroft *v.* Railroad Company	189
Bank of Commerce, Commissioners *v.*	374
Barney *v.* Dolph	652
Bates, County of, *v.* Winters	83
Beer Company *v.* Massachusetts	25
Blake, Howland *v.*	624
Blanchard, Gray *v.*	564
Bonnafon, United States *v.*	170
Briggs, Davie *v.*	628
Bringier *v.* United States	219
Brown, Memphis *v.*	300
Burgess *v.* Salmon	381
Burkhardt, Powder Company *v.*	110
Butler, Herbert *v.*	319
Cease, Robertson *v.*	646
Ceif's Assignee, United States *v.*	170
Chaboya *v.* Umbarger	280
"City of Hartford," The, and the "Unit"	323
Claflin, United States *v.*	546
Claflin, United States *v.*	553
Clark, Keith *v.*	454
Coleman *v.* Tennessee	509
Columbia, District of, Mattingly *v.*	687
Commerce, Bank of, Commissioners *v.*	374
Commissioners *v.* Bank of Commerce	374
Cook *v.* Pennsylvania	566

Page
Cook, Welch *v.* 541
County Commissioners, Lamborn *v.* 181
County of Bates *v.* Winters 83
County of Macon *v.* Shores 272
County of Warren *v.* Marcy 96
County of Warren *v.* Portsmouth Savings Bank 110
County of Warren *v.* Post 110
County of Wright, Emigrant Company *v.* 339

Davenport, Telegraph Company *v.* 369
Davie *v.* Briggs 628
Dean, Kendig *v.* 423
District of Columbia, Mattingly *v.* 687
Dolph, Barney *v.* 652

Eldridge *v.* Hill 92
Elizabeth *v.* Pavement Company 126
Emery, Stacey *v.* 642
Emigrant Company *v.* County of Wright 339
Erwin *v.* United States 392
Ethel's Assignee, United States *v.* 170
Evans, Troy *v.* 1

Fertilizing Company *v.* Hyde Park 659
Ford *v.* Surget 594
Four Packages *v.* United States 404

Gaines, Railroad Companies *v.* 697
Gaussen *v.* United States 584
Glue Company *v.* Upton 3
Godfrey *v.* Terry 171
Grant *v.* National Bank 80
Gray *v.* Blanchard 564

Hall, Noyes *v.* 34
Harris, Insurance Company *v.* 331
Herbert *v.* Butler 319
Hill, Eldridge *v.* 92
Hill *v.* National Bank 450
Hosmer *v.* Wallace 575
Hotel Company *v.* Wade 13
Howland *v.* Blake 624

Page
Hurley v. Jones 318
Hyde Park, Fertilizing Company v. 659
Hyndman v. Roots 224

Insurance Company, Allis v. 144
v. Harris 331
v. Lewis 682

Jones, Hurley v. 318

Kansas Pacific Railway Company, Missouri, Kansas, and Texas Railway Company v. 491
Keith v. Clark 454
Kendig v. Dean 423
Kentucky, Patterson v. 501
Kihlberg v. United States 398
Kirk, Spofford v. 484

Lamborn v. County Commissioners 181
Leathers, Work v. 379
Levy, United States v. 170
Lewis, Insurance Company v. 682
Lilienthal's Tobacco v. United States 237
Loomis, Wallace v. 146

Machine Company v. Murphy 120
Macon, County of, v. Shores 272
Marcy, County of Warren v. 96
Marks, Martin v. 345
Marsh v. Seymour 348
Martin v. Marks 345
Massachusetts, Beer Company v. 25
Mattingly v. District of Columbia 687
McKee v. United States 233
McMicken v. United States 204
Memphis v. Brown 300
Memphis, United States v. 284
Memphis v. United States 293
Mimmack v. United States 426
Missouri, Kansas, and Texas Railway Company v. Kansas Pacific Railway Company 491

Page
Moller, Arthur *v.* 365
Mora, United States *v.* 413
Murphy, Machine Company *v.* 120

National Bank, Grant *v.* 80
Hill *v.* 450
v. Shoemaker 692
Nauvoo *v.* Ritter 389
Newcomb *v.* Wood 581
Norton, United States *v.* 164
Noyes *v.* Hall 34

Patterson *v.* Kentucky 501
Pavement Company, Elizabeth *v.* 126
Pennsylvania, Cook *v.* 566
Pepper, Stoll *v.* 438
Pettigrew *v.* United States 385
Portsmouth Savings Bank, County of Warren *v.* 110
Post, County of Warren *v.* 110
Powder Company *v.* Burkhardt 110

Railroad Companies *v.* Gaines 697
Railroad Company, Ashcroft *v.* 189
Railway Company *v.* Sayles 554
Ritter, Nauvoo *v.* 389
Robertson *v.* Cease 646
Robinson, Shillaber *v.* 68
Rock Island, Ruch *v.* 693
Roots, Hyndman *v.* 224
Rowan, United States *v.* 170
Rubber-Coated Harness-Trimming Company *v.* Welling . . 7
Ruch *v.* Rock Island 693

Salamon, Stewart *v.* 361
Salmon, Burgess *v.* 381
Sayles, Railway Company *v.* 554
Sedgwick, Trust Company *v.* 304
Settlemier *v.* Sullivan 444
Seymour, Marsh *v.* 348
Shillaber *v.* Robinson 68
Shoemaker, National Bank *v.* 692

Page
Shores, County of Macon *v.* 272
Spofford *v.* Kirk 484
Stacey *v.* Emery 642
Stewart *v.* Salamon 361
Stoll *v.* Pepper 438
Sullivan, Settlemier *v.* 444
Surget, Ford *v.* 594

Telegraph Company *v.* Davenport 369
Tennessee, Coleman *v.* 509
Terry, Godfrey *v.* 171
The "City of Hartford" and the "Unit" 323
The "Virginia Ehrman" and the "Agnese" 309
Troy *v.* Evans 1
Trust Company *v.* Sedgwick 304

Umbarger, Chaboya *v.* 280
"Unit," The, and the "City of Hartford" 323
United States *v.* Bonnafon 170
Bringier *v.* 219
v. Ceif's Assignee 170
v. Claflin 546
v. Claflin 558
Erwin *v.* 392
v. Ethel's Assignee 170
Four Packages *v.* 404
Gaussen *v.* 584
Kihlberg *v.* 398
v. Levy 170
Lilienthal's Tobacco *v.* 237
v. McKee 233
McMicken *v.* 204
Memphis *v.* 293
v. Memphis 284
Mimmack *v.* 426
v. Mora 418
v. Norton 164
Pettigrew *v.* 385
v. Rowan 170
v. Watkins 219
v. White 170

Page
United States *v.* Yorke 170
United States, Young *v.* 89
Upton, Glue Company *v.* 8

"Virginia Ehrman," The, and the "Agnese" 309

Wade, Hotel Company *v.* 13
Wallace, Hosmer *v.* 575
Wallace *v.* Loomis 146
Warren, County of, *v.* Marcy 96
v. Portsmouth Savings Bank 110
v. Post 110
Watkins, United States *v.* 219
Welch *v.* Cook 541
Welling, Rubber-Coated Harness-Trimming Company *v.* . . . 7
White, United States *v.* 170
Winters, County of Bates *v.* 83
Wood, Newcomb *v.* 581
Work *v.* Leathers 379
Wright, County of, Emigrant Company *v.* 339

Yorke, United States *v.* 170
Young *v.* United States 89

REPORTS OF THE DECISIONS

OF THE

SUPREME COURT OF THE UNITED STATES,

OCTOBER TERM, 1877.

TROY *v.* EVANS.

1. The amount of the judgment below against a defendant in an action for money is *prima facie* the measure of the jurisdiction of this court in his behalf.
2. This *prima facie* case continues until the contrary is shown; and, if jurisdiction is invoked because of the collateral effect a judgment may have in another action, it must appear that the judgment conclusively settles the rights of the parties in a matter actually in dispute, the sum or value of which exceeds $5,000, exclusive of interest and costs.

MOTION to dismiss a writ of error to the Circuit Court of the United States for the Middle District of Alabama.

This is an action commenced Oct. 31, 1872, by Evans, Gardner, & Co., against the Mayor and Councilmen of Troy, a municipal corporation in Alabama.

The declaration alleges that the defendant, on the 19th of February, 1869, pursuant to lawful authority, issued certain town bonds, each for $100, payable to bearer, with interest at eight per cent per annum from said date, in ten annual instalments, after the completion of the Mobile and Girard Railroad to said town, together with the accrued interest; that sixty-three of said bonds are the property of the plaintiffs; that said road was completed to the town of Troy June 9, 1870; and that three annual instalments of ten per cent each, amount-

ing to $30 of the principal, are due and unpaid on each of said bonds, besides interest. The plaintiffs therefore claim $1,890, the amount of the instalments due on said bonds, with interest on said bonds, at eight per cent per annum, from Feb. 19, 1869.

The defendant's plea sets forth that at the commencement of the suit the plaintiffs held the bonds as security for an existing liability or indebtedness of one Jones to them, which was much smaller in amount than the amount of said bonds, and which was neither paid nor extinguished by said bonds, nor by their delivery to the plaintiffs by said Jones; that the plaintiffs obtained said bonds from Jones, before the commencement of the suit, as security for his liability or indebtedness to them, and held the same as such security at the commencement of the suit, and not otherwise; and that, when they so obtained said bonds, they had notice that Jones was a citizen of the State of Alabama, as in fact he then was, and ever since has been.

There was a judgment for the plaintiffs, May 27, 1875, for $3,926.96. The defendant below then sued out this writ of error, which the defendants in error now move to dismiss, on the ground that the amount in controversy is not sufficient to give this court jurisdiction.

Mr. H. A. Herbert for the defendants in error, in support of the motion.

Mr. Samuel F. Rice and *Mr. Thomas G. Jones, contra.*

MR. CHIEF JUSTICE WAITE delivered the opinion of the court.

The writ of error in this case was sued out by the defendants below, upon a judgment rendered May 27, 1875, for $3,926.96. If there were nothing more, it would be clear that we have no jurisdiction. The bonds sued upon, however, were payable in instalments, and amounted in the aggregate to more than $5,000, while the instalments due when the judgment was rendered were less. The plea upon which the case was tried put in issue only the ownership of the bonds and the right of the plaintiffs to bring the suit, the claim being that one Jones, a citizen of Alabama, was the real owner, and that the plaintiffs

held them only as security for a debt which he owed, less in amount than the bonds. The amount of the debt nowhere appears in the pleadings, though it is admitted that the bonds were held as security only.

Conceding all that is claimed in the argument opposing this motion, to wit, that the judgment in this action will be conclusive in another by the present plaintiffs upon the same bonds as to the liability of the defendants upon the bonds to the extent of the debt of Jones, for which they are held, still our jurisdiction cannot be maintained, unless it also appears that this debt exceeds $5,000. *Prima facie*, the judgment against a defendant in an action for money is the measure of our jurisdiction in his behalf. This *prima facie* case continues until the contrary is shown; and, if jurisdiction is invoked because of the collateral effect a judgment may have in another action, it must appear that the judgment conclusively settles the rights of the parties in a matter actually in dispute, the sum or value of which exceeds the required amount. No issue was raised here as to how much was actually due the plaintiffs from Jones, and the testimony is by no means clear upon that subject. Certainly there is nothing in the record which concludes the parties upon that question; and, as it rests upon the plaintiff in error to establish our jurisdiction affirmatively before we can proceed, the writ is

Dismissed.

GLUE COMPANY *v.* UPTON.

1. The mere change in form of a soluble article of commerce, by reducing it to small particles so that its solution is accelerated and it is rendered more ready for immediate use, convenient for handling, and, by its improved appearance, more merchantable, does not make it a new article, within the sense of the patent law.
2. To render an article new within that law, it must be more or less efficacious, or possess new properties by a combination with other ingredients.
3. Reissued letters-patent No. 4072, granted July 12, 1870, to Thomas P. Milligan and Thomas Higgins, assignees of Emerson Goddard, for an improvement in the manufacture of glue, — the alleged improvement consisting "of glue comminuted to small particles of practically uniform size, as distinguished from the glue in angular flakes hitherto known," — are void for want of novelty.

APPEAL from the Circuit Court of the United States for the District of Massachusetts.

This is a suit in equity by the Milligan and Higgins Glue Company, against George Upton, for the alleged infringement of reissued letters-patent No. 4072, for an improvement in the manufacture of glue, granted July 12, 1870, to Thomas P. Milligan and Thomas Higgins, assignees of Emerson Goddard, upon the surrender and cancellation of original letters-patent No. 44,528, issued to the latter Oct. 4, 1864. The complainant is the assignee of Milligan and Higgins. The bill prays for an injunction, and for an account of the defendant's gains and profits arising from the manufacture and sale of the patented article. Upon hearing, the court below dismissed the bill, whereupon the complainant appealed here. The facts relating to the alleged invention are stated in the opinion of the court.

The case was argued by *Mr. Edmund Wetmore* for the appellant.

The court declined to hear *Mr. George L. Roberts* and *Mr. Chauncey Smith* for the appellee.

MR. JUSTICE FIELD delivered the opinion of the court.

In the court below, the defendant questioned the validity of the surrender of the original patent and of the reissue; but, from the view we take of the alleged invention or discovery, it is unnecessary to consider this point. We shall treat the reissue as for the same invention or discovery, differing in no substantial particular from that originally patented. In the specification accompanying the reissue, the patentee states that he has invented a new and useful article, which he denominates "instantaneous or comminuted glue;" and then proceeds to describe the glue of commerce previously found in the market, and to point out the inconveniences attending its use, and the manner in which they are obviated by his invention. He states that the ordinary glue of commerce was then sold in the form of hard, angular flakes, and that it required a good deal of time to prepare it for use,—first by soaking it in cold water, and afterwards by heating it in a hot-water bath until the flakes were dissolved. The time thus occupied, he says,

is saved by his invention, as his article does not require to be prepared for solution by soaking, is quickly permeated by water, so that it can be dissolved in large quantities ready for mechanical use in less than five minutes, and in smaller quantities for domestic use in less than one minute. Another objection stated to the glue of commerce as previously sold is, that great inconvenience was experienced in retailing it, from the difficulty of putting it up in small packages, by reason of the sharp, angular corners and edges of the broken flakes, which cut the wrappers, causing a waste of time and stock. The new article, he says, can be put up by machinery or by hand into packages of uniform size and of regular form and weight, similar to those in which ground spices are put up for domestic use, and sold by retail traders. He also states that the new article has a more pleasing appearance than the ordinary glue of commerce, in that it has a white color, and is consequently more merchantable, and brings a higher price.

The specification then proceeds to describe the best process which the inventor has devised for making such instantaneous glue, and the apparatus or machinery he has used. These consist of a breaking machine, for crushing the flakes into small pieces, and of a rasping or grating machine, for comminuting the broken pieces into uniform grains. But for these mechanical means or processes the patentee makes no claim, observing, that it is obvious that other means or processes of crushing or reduction may be used to manufacture his article out of dry flake glue or gelatine by a crushing or breaking operation, and that his claim is only to the comminuted glue as a new article of manufacture.

It thus appears that the invention claimed is not any new combination of ingredients, creating a different product, or any new mechanical means by which a desirable change in the form of a common article of commerce is obtained; but it consists only of the ordinary flake glue reduced to small particles by mechanical division. The advantages from such division consist in its more ready and rapid solution, its greater convenience for packing and retailing, and its whiter appearance and enhanced salableness. The whole claim is to an old article of commerce in a state of mechanical division greater than pre-

viously used, but unchanged in composition and properties; and the benefits arising from the increased division are such as appertain to every soluble substance when divided into minute particles.

This statement, which is substantially a repetition in a condensed form of that by counsel, is supported by reference to numerous instances where similar results have followed the mechanical division of soluble objects into small particles; but we do not deem it necessary to mention them, for the point involved presents no difficulty. There is nothing new in the fact that the solution of a soluble substance is accelerated by increasing its fragmentary division; nor is there any thing new in the fact that articles with rough angles and edges can be more readily put up into packages without injury to their wrappers when reduced by mechanical division into small particles; nor is there any thing new in the fact that such articles generally improve in appearance by granulation or powdering.

A distinction must be observed between a new article of commerce and a new article which, as such, is patentable. Any change in form from a previous condition may render the article new in commerce; as powdered sugar is a different article in commerce from loaf sugar, and ground coffee is a different article in commerce from coffee in the berry. But to render the article new in the sense of the patent law, it must be more or less efficacious, or possess new properties by a combination with other ingredients; not from a mere change of form produced by a mechanical division. It is only where one of these results follows that the product of the compound can be treated as the result of invention or discovery, and be regarded as a new and useful article. The three advantages attributed to comminuted glue over the flake glue were, previous to the alleged invention of Goddard, recognized as following from a division of soluble objects into small particles, in the treatment of a great variety of articles in constant use in the kitchens of families, and in pharmacy. Where certain properties are known to belong generally to classes of articles, there can be no invention in putting a new species of the class in a condition for the development of its properties similar to

that in which other species of the same class have been placed for similar development; nor can the changed form of the article from its condition in bulk to small particles, by breaking or bruising or slicing or rasping or filing or grinding or sifting, or other similar mechanical means, make it a new article, in the sense of the patent law.

This subject is elaborately considered by the presiding justice of the Circuit Court, in his opinion, with reference to numerous adjudications of the courts of England and the United States; and in his conclusion on this point we concur.

Decree affirmed.

RUBBER-COATED HARNESS-TRIMMING COMPANY v. WELLING.

Letters-patent No. 87,941, granted March 17, 1863, to William M. Welling, for an improvement in rings for martingales, are void for want of novelty, being merely for a product consisting of a metallic ring enveloped in a composition of ivory or similar material.

APPEAL from the Circuit Court of the United States for the District of New Jersey.

The facts are stated in the opinion of the court.

Mr. J. C. Clayton and *Mr. H. Q. Keasley* for the appellants.
Mr. Frederic H. Betts, contra.

MR. JUSTICE HUNT delivered the opinion of the court.

William M. Welling brought this suit in the Circuit Court against the Rubber-Coated Harness-Trimming Company and others, alleging an infringement of his letters-patent No. 87,941, bearing date March 17, 1868, for an improvement in rings for martingales, and recovered damages. The company thereupon appealed to this court.

Welling's patent bears date of March 17, 1863, and recites that a previous patent to him described a particular mode of making factitious ivory, out of which billiard-balls and rings of various kinds were manufactured, and states that his present invention does not relate to that particular composition, but that "the nature of my said invention consists in the employ-

ment of a metallic ring within a ring formed of artificial ivory or similar materials, for giving strength to the same, thereby producing a new article of manufacture."

His method of proceeding is as follows: —

"In order to make my improved rings, I take a ring of metal, such as shown at *a*, or said ring may be formed by punching out a washer from a sheet of metal, or in any other suitable way. I take the amount of artificial ivory composition, and by dies or by hand cause the said composition to completely envelop the said ring with as much uniformity as possible, as at *b*; and, to give the exterior finish to the same, press and solidify the mass of composition around the ring by means of dies, and in so doing any plain or more or less ornamental shape may be given to the said ring, or the surface thereof. My ring is thus made of the desired ornamental appearance, while great strength is attained at very little cost."

His claim is in these words: —

"What I claim and desire to secure by letters-patent is the ring for martingales, &c., manufactured as set forth, with a metal ring enveloped in composition, as and for the purposes specified."

In ascertaining the construction to be put upon this patent, the state of the art is a legitimate and necessary subject of consideration.

1. The fact that metallic rings covered with a composition such as lacquer or varnish, rubber, enamel, or glass, had been in use for many years before Welling's invention, is clearly proved, and is conceded in the briefs on both sides. In most instances, these coverings were applied and secured first by the hand of the operator, and then by machinery.

2. It is proved by witnesses, and shown by the patents hereafter referred to, that prior to his invention dies were also made use of in the manufacture of pipes or rings upon iron cores. Elliot, an expert witness, says, in reply to the question: "Is it a part of your knowledge of the state of the art of manufacturing articles of composition or plastic materials, that pipes of lead composition have been formed upon iron cores by pressure in dies?" "It is." Again: "Do you mean to say, in the manufacture of rings, that dies were well known prior to the invention in suit? *Ans.* I believe rings were formed in dies prior to that time, but without metal cores."

Hedrick says: "It was not new two years before the date of Welling's application to make a martingale-ring by covering a metallic ring with a shell of plastic material which could be moulded or pressed thereupon and afterwards hardened."

The English patent issued to Moses Poole, dated Oct. 1, 1852, and of which the specification is dated March 30, 1853, was referred to by a witness, but was not given in evidence. We therefore pass it without comment.

The English patent of 1851, to Newton, referred to in the testimony, recites: —

"When it is desired that the compound of caoutchouc or gutta-percha shall serve as a covering to the iron or other substance, a thin sheet of the compound, sometimes one thirty-second part of an inch in thickness, or less, is pressed with great care upon the iron or other substance, so as to expel all air from between the adjoining surface, and to cause the most perfect union and adhesion; the coated article is bound with strips or ribbons of cloth, or other suitable material, whereby the compound is kept in close contact with the article during the process of hardening. The combined materials thus treated will be found to possess the qualities desired, the iron or other substance giving strength, and the compound giving a hard and durable surface. In this way may be produced many articles used in and about harness or carriages, such as saddle-trees, buckles, terrets, bits, stirups, martingale-rings, dasher-irons, and articles intended to be used as furniture," &c.

"Another plan consists in so treating the compositions while in a plastic state that they will harden into any desired shape. . . . For this purpose, the compounds of caoutchouc or gutta-percha, before described, are taken in the plastic state, and cut or pressed or otherwise formed into the exact shapes which it is desired they shall retain after vulcanization."

In the English patent to Edward Benton, of 1843, the rings, terrets, and other parts are covered with an enamel or vitreous composition, of which the composition and the manner of applying it to the ring are described; and in speaking of these linings it is said, "The said linings are formed in moulds by processes well understood," &c.

Similar language is used in the English patent to Barnwell

& Rollauson, dated 1860: "We make toys, &c., by employing moulds or dies of any suitable material for which our composi tion has no affinity, or to which it will not adhere."

A die is a piece of metal on which is cut a device which by pressure is to be placed upon some softer body. A mould is a receptacle into which a softer material is injected, to take its shape when hardened. Both dies and moulds are there spoken of; and it thus appears that not only were there well known and in extensive use, before Welling's patent, iron rings, tubes, pipes, toys, and other articles of manufacture, enveloped in and surrounded by glass, enamel, rubber, and other like substances, but these coverings had been applied and ornamented by means of moulds or dies.

As we read Welling's patent of 1863, it is for a product, and not for a process.

In 1857, he obtained letters-patent No. 17,999, for the manufacture of artificial ivory. He gives the proportions of white shellac, of impalpable white, of ivory dust and camphor, which are to be heated, thoroughly incorporated, and brought into heated moulds for the manufacture of various articles. His claim in that patent is for forming artificial ivory, by thoroughly mixing the articles specified, or others having equivalent properties, while under the operation of heat, substantially as specified. The patent was for a product resulting from the materials and proportions described, to wit, factitious ivory.

Having the advantages of his manufactured ivory strongly impressed upon his mind, he makes, in 1863, a more specific application of this invention of ivory to the production of martingale-rings.

He says in his description, "I have invented and applied to use a certain new and useful improvement in rings for martingales." He does not here claim to have invented a substance or material or composition; he claims no benefit of any process to reach his result, but claims a ring only. He claims a product; and all else is a description of the mode of obtaining that product, which would enable a skilled mechanic to make the article, and which the law requires him to set forth in his specification. Of this character is the statement that the composition envelops the ring by means of dies or the hand, and

that an exterior finish and ornament is produced by solidifying by the means of dies.

Again, he says: "The nature of my invention consists in the employment of a metallic ring within a ring formed of artificial ivory, or similar materials for giving strength to the same, thereby producing a new article of manufacture," &c.

A metallic ring within a ring of factitious ivory is the article to be produced, and that is the nature of the invention.

Nothing can be more specific than the summing up as to the nature of his invention by the patentee, when he says, "What I claim and desire to secure by letters-patent is the ring for martingales, manufactured as set forth, with a metal ring enveloped in composition, as and for the purposes specified." A metal ring enveloped in composition would seem to be the plain subject of the monopoly, the other language being merely illustrative of or supplemental to the main idea.

What, then, is the product thus secured by his patent?

Welling gives this construction to his patent: "I claim (under my patent) all compositions for covering martingale-rings or rings for harness." "Do you claim that all metallic harness-rings covered with composition of any kind are subject to your patent? I do most certainly."

If this is the true construction of the patent, it cannot be sustained under the evidence showing the use of covering of harness-rings by various compositions, and patents providing for such use, prior to his patent.

Another construction claims that the patent covers a ring having an iron core covered with a plastic composition, if and provided the article is finished by dies. This is the view of the appellee's expert witness, Elliot, who states expressly that, if made without the use of dies, he does not consider the article within the patent.

Nearly allied to this idea, if not identical with it, is that of the judge who tried this case at the circuit. He says of Welling's patent: "His instrumentalities were all old, — an iron ring, a plastic composition, and a die; but, so far as appears in the case, they were new in combination. If his patent had been simply for a metallic ring, covered with any compound capable of being moulded, or with factitious ivory or similar

materials, it would have been void for want of novelty. If it had been for the use of the die in pressing and solidifying plastic substances generally, it would have been probably anticipated in this regard by the English letters-patent to Barnwell & Rollauson of 1860, in which such use of dies is plainly indicated. But the invention is for a combination; and the combination is a metal ring surrounded with some plastic composition, like artificial ivory, of such a nature that it is capable of being compressed, solidified, and polished by the action of the dies, and which is in fact subjected to such action, whereby a martingale-ring is produced with an exterior surface more durable and more highly polished than had before been obtained by different processes of manufacture, and at greater cost."

We think the evidence shows that this combination, if it is entitled to that rank in mechanics, as well as the ring and the compound, is old. There is, in truth, no combined action. The iron core is used as a basis, the covering is of a pliable composition, and it is pressed or stamped by dies or moulds. All this is done separately, by no combined action. This is just as much, and nothing more, than is described by the witnesses, and by the patents prior to Welling's. It is simply the application and the action of old and well-known modes and materials in an accustomed manner. It is a case of aggregation, not of combination.

Can the appellee recover in this action upon a patent for this product, to wit, a metal ring enveloped in a composition of artificial ivory or a similar material?

It is evident, from what has already been said, that a patent for the manufacture of a metal ring enveloped in a composition of ivory or similar material is void for the want of novelty.

Such is the testimony of the expert witnesses on both sides, as well as the inevitable result from an examination of the English patents heretofore referred to. Indeed, we do not understand the counsel as contending that the patent can be sustained if this is held to be its construction.

Upon the whole case, we are of the opinion that the decree must be reversed and the case remitted to the Circuit Court, with directions to enter a decree dismissing the bill of complaint, with costs; and it is

So ordered.

HOTEL COMPANY v. WADE.

1. Bonds issued by a corporation in Nebraska, secured by a mortgage on its lands there situate, were held by citizens of another State, who, on default of the corporation to pay the interest represented by the coupons, applied to the trustee named to take possession of the lands, pursuant to the mortgage, and bring a foreclosure suit. On his refusal, they filed their bill Sept. 24, 1873, in the Circuit Court, against him, the corporation, and the other bond and coupon holders, all citizens of Nebraska, who refused to join in bringing suit. *Held*, that the complainants had the right to file their bill, and that the court below had jurisdiction, although some of the respondents were joined as such solely on the ground that they had refused to unite with the complainants in the prosecution of a suit to compel the trustee to foreclose the mortgage.
2. Where stockholders sanctioned a contract, under which moneys were loaned to a corporation by its directors, and its bonds therefor, secured by mortgage, given, and the moneys have been properly applied, the corporation is estopped from setting up that the bonds and mortgage are void by reason of the trust relations which the directors sustained to it.
3. In order to sustain the defence of usury when a contract is, on its face, for legal interest only, there must be proof that there was some corrupt agreement, device, or shift to cover usury, and that it was in full contemplation of the parties.

APPEAL from the Circuit Court of the United States for the District of Nebraska.

This is a bill filed Sept. 24, 1873, by Jeptha H. Wade, a citizen of Ohio, and James W. Bosler, a citizen of Pennsylvania, against the Omaha Hotel Company, a corporation of Nebraska, Milton Rogers, Thomas Wardell, Edward Creighton, Augustus Kountze, Herman Kountze, Andrew J. Poppleton, Henry W. Yates, Edward D. Pratt, Charles W. Hamilton, and others, citizens of that State, to foreclose a mortgage of certain lands in Omaha, and the hotel and other buildings then or thereafter to be erected thereon, executed by that company Sept. 1, 1871, to said Rogers, as trustee, to secure one hundred coupon bonds for $1,000 each, issued by it, and payable in five years, with interest at twelve per cent per annum, payable September 1 and March 1 in each year. It was, among other things, covenanted that the company should keep the hotel insured for not less than $100,000, by good and responsible companies, and assign the policy for the benefit of the bond-

holders; that it should pay all taxes and assessments, general or special, on the premises; and that the sum raised by the mortgage should, under the management, direction, and control of the company, be faithfully and honestly applied to the completion of the hotel. The condition was, that if the company "shall well and truly pay the interest on said bonds, as it becomes due, and the principal at maturity, and perform each and every other covenant and agreement herein, then this conveyance shall be void; otherwise, to remain in full force and effect. And in case of a failure to pay the interest according to the tenor and effect of said bonds, or to perform any other covenant or agreement herein contained, then, in that case, not only the interest but the principal of said bonds shall become due and payable; and the said party of the second part or his successors shall have the right to take immediate possession of said property, foreclose this mortgage, and sell said mortgaged premises." . . .

The bill alleges that the bonds were, immediately upon their execution, delivered to Creighton and other parties, who advanced the $100,000, which was duly expended by the company as required by the mortgage; and that on July 25, 1873, Wade, in the usual course of business, and without knowledge of any defences thereto, purchased in good faith from Creighton thirty-five of the bonds, and that on the 23d of that month, Bosler, in like manner, purchased from Augustus Kountze forty of them, both purchases having been made without any knowledge, suspicion, or reason to suspect that any overdue coupons theretofore attached to said bonds had not been paid, and that Wardell holds the remaining twenty-five bonds. It also alleges that, save that due March 1, 1872, no interest has been paid on the bonds, but that the past-due coupons are held by Creighton, Augustus Kountze, Herman Kountze, and Yates, who claim to be interested in the security of the mortgage; that the coupons held by the complainants, and due Sept. 1, 1873, were duly presented by them for payment, and payment having been refused, they were protested, and notice thereof given to the company; that default was made in the payment of State and county taxes due on the property in December, 1872, on which account it was sold, Sept. 8, 1873, Augustus Kountze

becoming the purchaser, and that it was again, on the 18th of that month, sold for the non-payment of taxes to the city of Omaha; that since Sept. 5, 1873, the premises have been insured but for $40,000; and that the company has, by the foregoing and other breaches of its covenants, caused the principal as well as the interest of the bonds to become due and payable. It further alleges that the complainants applied to the said trustee to take possession of the premises, and bring an action to foreclose the mortgage, offering to indemnify and save him harmless from all costs and expenses, but that he refused so to do; and that they applied to Wardell, Creighton, Poppleton, Augustus Kountze, Herman Kountze, and Yates to join in such a suit, but that they and each of them declined. The bill prays for a receiver, an account, a sale of the mortgaged premises, and general relief.

Separate answers were filed by Pratt and Hamilton, by Caldwell and others, and by the Hotel Company. The answer of the latter, after insisting that the bill was defective for want of proper parties, and that therefore the court had no jurisdiction of the suit, sets up certain defences, which are stated in the opinion of the court.

There was a decree for the complainants; whereupon the Hotel Company, and certain other of the respondents, brought the case here.

Mr. Clinton Briggs for the appellants.

In order to sustain the jurisdiction of the court below, each and all of the bond and coupon holders were indispensable parties complainant. The practice of courts of general jurisdiction, where those who refuse to join as complainants may be impleaded as defendants, cannot obtain in the Circuit Court of the United States, where jurisdiction depends upon the citizenship of the parties. There the controversy must be between citizens of different States, not between those of the same State. The only difficulty is, to determine who are and who are not indispensable parties. *Russell* v. *Clark's Executors*, 7 Cranch, 69; *Shields et al.* v. *Barrow*, 17 How. 130; *Coal Company* v. *Blatchford*, 11 Wall. 172; *Knapp* v. *Railroad Company*, 20 id. 117; *Case of the Sewing-Machine Companies*,

18 id. 558; *Williams et al.* v. *Bankhead*, 19 id. 568; *Ober* v. *Gallagher*, 93 U. S. 199.

The act of March 3, 1875, enlarging the jurisdiction of the Circuit Court, does not change the rule that each plaintiff must be competent to sue, and each defendant liable to be sued.

In a matter so vital as that of jurisdiction, the court will consider who are the real actors. *McNutt* v. *Bland et al.*, 2 How. 9; *Huff et al.* v. *Hutchinson*, 14 id. 586.

The bonds and mortgage are invalid, by reason of the trust relation which the lenders of the money, who were a majority of the board of directors of the company, sustained to the stockholders. *Michoud et al.* v. *Girod et al.*, 4 How. 503; *Koehler* v. *Black River Falls Iron Co.*, 2 Black, 715; *Drury* v. *Cross*, 7 Wall. 299; *Jackson* v. *Ludeling*, 21 id. 616; *Stephen* v. *Beall*, 22 id. 329; *Twin-Lick Oil Co.* v. *Marbury*, 91 U. S. 587; *Luxemburg Railroad Co.* v. *Macquay*, 25 Beav. 586; *Cumberland Coal Co.* v. *Sherman*, 30 Barb. (N. Y.) 553; *Railroad Company* v. *Poor*, 59 Me. 277; *San Diego* v. *Railroad Company*, 44 Cal. 106; *Goodwin* v. *Railroad & Canal Company*, 18 Ohio St. 182.

The interest contracted for and received by the lenders of the money was usurious. *Bank of the United States* v. *Owens et al.*, 2 Pet. 527; *Brown* v. *Vanderburgh*, 43 N. Y. 195; *Creig* v. *Bliss*, 26 Pa. 271; *Feidler* v. *Darrin*, 50 N. Y. 437.

Mr. J. M. Woolworth, contra.

MR. JUSTICE CLIFFORD delivered the opinion of the court.

Jurisdiction of the circuit courts, concurrent with the courts of the several States, under the existing act of Congress, is extended, where the matter in dispute exceeds the sum or value of $500, to all suits at common law or in equity in which there shall be a controversy between citizens of different States, without any exception or qualification, employing the very words contained in the Constitution. 18 Stat. 470; Const., art. 3, sect. 2.

Motives of a public character induced certain residents of the city of Omaha to become organized as a corporation, to facilitate their efforts to erect a hotel at that place. Expendi-

tures to a large amount were incurred by the Hotel Company in purchasing the lot and in erecting and enclosing the building; and, being unable to complete the same without pecuniary aid from others, they decided to mortgage the premises to raise the necessary funds for the purpose.

Arrangements were first attempted, and partly perfected, to make a loan of $75,000; but it was soon after determined that it would require $25,000 more to accomplish the object. Negotiations of various kinds ensued, which resulted in a vote of the stockholders in favor of the proposition ultimately carried into effect, to borrow $100,000 to complete the hotel.

Action of a corresponding character was had by the board of directors; and they voted to accept the proposition made to the stockholders, and directed the president and secretary of the company to execute, acknowledge, and deliver to Milton Rogers, trustee, a mortgage or trust deed of the hotel lot and building, as more fully set forth in the record.

Bonds of the company executed to bearer, with interest coupons attached, to the number of one hundred, each for the sum of $1,000, with interest at the rate of twelve per cent, payable semi-annually, were issued, the principal payable in five years, with the privilege to the company of paying the same two years earlier. Payment of the bonds, principal and interest, was secured by the mortgage or trust deed executed by the president and secretary of the company, in pursuance of the aforesaid vote of the board of directors to carry into effect the proposition previously adopted by the stockholders at their meeting duly notified and held for the purpose.

Covenants alleged to have been broken are the following: 1. That the company shall keep the hotel building insured in good and responsible companies, to be agreed between the parties, in the sum of not less than $100,000, and that the company shall assign the policies to the trustee, for the benefit of the holders of the bonds. 2. That the company shall pay all taxes and assessments upon the mortgaged premises. 3. That the sum raised by the mortgage shall be applied to the construction and completion of the hotel building. 4. That the company shall well and truly pay the interest as it becomes due, and the principal at maturity; and the instrument provides that in case

of failure to pay the interest or to perform any other of the covenants or agreements therein contained, then in that case not only the interest but the principal shall become due and payable, and the trustee shall have the right to take immediate possession of the property, foreclose the mortgage, and sell the mortgaged premises.

Specific breaches of the covenants of the instrument are alleged, and failures, neglects, and refusals of the company to perform the same, in consequence of which the complainants aver and charge that the principal as well as the interest of the mortgage debt has become due, and that they are entitled to a decree foreclosing the mortgage.

Service was made, when most of the respondents entered an appearance, and two of the respondents, to wit, E. D. Pratt and Charles W. Hamilton, filed an answer. Certain interlocutory proceedings followed, which it is not material to notice in this investigation. Six other respondents subsequently appeared and filed an answer, and at a still later period the Hotel Company appeared and filed their answer. Special reference need only be made to the answer of the Hotel Company, as the other two answers relate chiefly to the application for a receiver.

Four principal defences were set up by the company: 1. That the Circuit Court had no jurisdiction of the case. 2. That the bonds and mortgage were void because of the trust relation which the lenders of the money sustained to the stockholders. 3. Because the lenders of the money contracted for and received usurious interest. 4. That the complainants were not *bona fide* holders of the bonds, and that the bonds do not equitably bind the Hotel Company.

Due process was served, and it is conceded that the respondents who did not answer suffered the bill of complaint to be taken as confessed. Without unnecessary delay, the complainants filed the general replication, and proofs were taken on both sides. Hearing was had upon bill, answer, replication, and proofs; and the Circuit Court entered a decree in favor of the complainants, as fully set forth in the record, the details of which are not material to the questions to be decided in this court.

Prompt appeal was taken by the respondents; and since the cause was entered here they have filed as an assignment of errors the rulings of the Circuit Court in overruling the four defences set up in the answer of the Hotel Company, the first being that the Circuit Court had not jurisdiction of the case, by which is meant that proper parties are not made in the bill of complaint to enable the Circuit Court to decree the relief for which the complainants pray.

Want of proper parties is the true nature of the alleged error, the principal defects specified being the following: 1. That the suit is in the name of certain bondholders, and not in the name of the trustee designated in the mortgage. 2. That the other bondholders are not joined as complainants in the suit.

Application was made to the trustee by the complainants to take possession of the mortgaged premises, and to bring an action in proper form for the foreclosure of the deed of trust and for the sale of the premises; and they allege that he refused to comply with their request, notwithstanding that they offered to indemnify him and save him harmless.

Sufficient appears to show, beyond controversy, that the complainants had a right to have suit for a foreclosure in the name of the trustee; and having applied to him for that purpose, and he having refused to perform his duty, the complainants, with the other parties interested in the security, might properly become the actors in such a suit against the mortgagor, impleading the trustee also as a respondent. Resident parties interested to foreclose the mortgage or trust deed also refused to join in the suit with the complainants, and they were joined as respondents with the Hotel Company and the recusant trustee.

Circuit courts, it is admitted, have jurisdiction, under the judiciary act, of all suits of a civil nature, at common law or in equity, where the amount in dispute is sufficient, and the suit is between a citizen of the State where the suit is brought and a citizen of another State. 1 Stat. 78. Words and phrases of a much wider signification are used in the recent act of Congress defining the jurisdiction of the circuit courts, which provides that those courts shall have original cognizance, concurrent

with the courts of the several States, of all suits of a civil nature, at common law or in equity, where the matter in dispute exceeds the sum or value of $500, and in which there shall be a controversy between citizens of different States. When the decree in this case was entered, the latter provision was in operation, but the suit was commenced before the act which contains it was passed. 18 id. 470.

Tested by either provision, the court is of the opinion that the objections to the jurisdiction of the Circuit Court cannot be sustained, as the respondents are citizens of the State where the suit is brought, and the complainants are citizens of other States; nor does it make any difference that some of the respondents were joined as such because they refused to unite with the complainants in the prosecution of the suit. Equity practice in such cases is more flexible than the rules of pleading at common law, and often enables a complainant in equity to maintain the jurisdiction of the court in a case where a plaintiff in an action at law would find it to be difficult to do so, and perhaps impossible.

Argument to show that the case made in the record shows that the holders of the overdue and unpaid securities were entitled to sue for the foreclosure of the mortgage or trust deed is unnecessary, as the pleadings and proofs are full and decisive to that effect; and if so, then it is clear that the complainants, under the circumstances of this case, might select the Circuit Court as the forum for the adjudication of their rights.

Holders of such securities otherwise entitled to sue in the Circuit Court to foreclose the mortgage or trust deed are not compelled to join as respondents other holders of similar securities, if resident in other States, even if they refuse to unite as complainants, as the effect would be to oust the jurisdiction of the court. Cases of the kind frequently arise; and the rule is that such a party, if he refuses to unite with the complainant, may be omitted as a respondent, unless it appears that his rights would be prejudicially affected by the decree. But it is suggested that the proper parties for a decree are not before the court, as the bill of complaint shows that there are other holders of the securities besides the complainants.

It is true, beyond doubt, that all persons materially interested in the fund to be distributed should be made parties to the litigation; but this rule, like all general rules, will yield whenever it becomes necessary that it should be modified in order to accomplish the ends of justice. Authorities everywhere agree that exceptions exist to the general rule; and this court decided that the general rule will yield if the court is able to proceed to a decree and do justice to the parties before the court, without injury to others not made parties, who are equally interested in the litigation. *Payne* v. *Hook*, 7 Wall. 425.

Examples of the kind are put by Judge Story, in his work on Equity Pleading. Speaking of a bill brought by one of several residuary legatees for a final settlement and distribution of the estate of a testator or intestate, he says, all the residuary legatees or distributees ought in general to be made parties; but he admits that, if some are out of the jurisdiction of the court and cannot conveniently be joined, the court will dispense with them, and proceed to decree the shares of those before the court, the rule being that the decree is conclusive only as to those who are parties to the litigation. Story, Eq. Pl., sect. 89; *West* v. *Randall*, 2 Mas. 193; *Wood* v. *Dummer*, 3 id. 308.

Parties who are not named may intervene and make themselves actual parties, so long as the proceedings are *in fieri* and are not definitely closed by the course and practice of the court. *Campbell and Others* v. *The Railroad Company*, 1 Woods, 369.

Suppose that is so, then it is insisted that the bonds and mortgage are invalid because the lenders of the money sustained a trust relation to the stockholders.

Voluminous as the proofs are, it is scarcely possible to enter into the details of the evidence without extending the opinion to an unreasonable length, nor is it necessary, as we are all of the opinion that the finding of the circuit judge in respect to the theory of fact involved in the present proposition is correct. His finding is that the bonds and mortgage are not void upon the ground that the lenders of the money were also the directors of the company; that the terms of the contract were sanc-

tioned by the stockholders; and that the money loaned was needed to complete the building, and that it was applied to effect the purpose for which it was borrowed.

Preliminary to any action in the matter, the proposition for the loan was submitted to the stockholders, and the record shows that it was adopted by a stock vote. Stockholders and directors knew what amount was to be borrowed, and all the terms and conditions of the contract, and that bonds payable to bearer were to be issued for the loan, and that the bonds were to be secured by a mortgage or trust deed of the hotel property. All knew that a loan was indispensable to the completion of the building, and all were anxious that it should be effected without further delay.

Differences of opinion existed among the stockholders as to the best way of raising the money, and prior discussions had not tended to quiet the dissensions, but the stockholders at the meeting referred to decided to adopt the proposition which was carried into effect. Beyond doubt, some of the conditions of the proposition were somewhat peculiar, but the proofs show that it was openly submitted to the stockholders, and that they adopted it by a majority of their votes; that the bonds were subsequently issued, and that they were voluntarily secured by the mortgage or trust deed set forth in the record.

Taken as a whole, the proofs satisfy the court that the money was advanced in good faith, and that the bonds were duly executed and delivered; nor is the legality of the transaction affected by the fact that others of the directors besides the party who submitted the proposition took certain proportions of the bonds and furnished corresponding proportions of the money. It was the company or their agents that prescribed the form of the bonds, and, having issued the same in the form of negotiable securities, it must have been expected that they would be negotiated in the market. Enough appears, also, to warrant the conclusion that the stockholders were more interested to raise the money than to ascertain who would become the holders of the bonds.

Examined in the light of the circumstances attending the transaction, as the case should be, the court is of the opinion that the evidence fails to support the proposition that the bonds

and mortgage are invalid because the directors became the holders of the bonds and advanced the money. Transactions of the kind have often occurred; and it has never been held that the arrangement was invalid, where it appeared that the stockholders were properly consulted, and sanctioned what was done, either by their votes or silence. *Stark & Wales* v. *Coffin*, 105 Mass. 328; *Credit Association* v. *Coleman*, Law Rep. 5 Ch. 568; *Troup's Case*, 29 Beav. 353; *Hoare's Case*, 30 id. 225; *Smith* v. *Lansing*, 22 N. Y. 520; *Busby* v. *Finn*, 1 Ohio St. 409.

Most of the directors who took the bonds and advanced the money were owners of stock in the bank where the money when paid to the use of the company was deposited. Interest not having been paid on the deposits, it is insisted by the respondent company that the transaction was usurious; but the court is not able to sustain the proposition, as there is no evidence that any agreement was ever made that the money should be deposited in that bank. Usury, certainly, is not to be favored; but the rule is well settled, that, when the contract on its face is for legal interest only, then it must be proved that there was some corrupt agreement, device, or shift to cover usury, and that it was in full contemplation of the parties. *Bank of the United States* v. *Waggener*, 9 Pet. 378.

Nor is that rule at all inconsistent with what was previously decided by the court. Profit made or loss imposed on the necessities of the borrower, whatever form, shape, or disguise it may assume, where the treaty is for a loan and the capital is to be returned at all events, has always been adjudged to be so much profit taken upon the loan, and to be a violation of those laws which limit the lender to a specified rate of interest. *Bank of the United States* v. *Owens*, 2 Pet. 527; *Dowdall* v. *Lenox*, 2 Edw. (N. Y.) Ch. 267.

Much depends upon the intent of the parties in the transaction. Consequently, where a certificate of deposit was given, payable at a future day, it was held not to be usury, it appearing that it was given at the request of the depositor, and for his accommodation, without any intent to secure usury. *Knox* v. *Goodwin*, 25 Wend. (N. Y.) 643.

Decided cases also establish the rule that the withholding a

part of a loan for a time in violation of the agreement of the parties does not constitute usury, as the retention of the money was no part of the contract or loan. *Adm'r of Auble* v. *Trimmer*, 17 N. J. Eq. 242; *Executors of Howell* v. *Auten et al.*, 1 Green (N. J.) Eq. 44.

So where checks were drawn before the discount was made and deposited, and the bank treated the note as discounted at the date of the checks, the court held that it was not usury, as the circumstances negatived any unlawful intent. *Walker* v. *Bank of Washington*, 3 How. 62.

When the bonds were converted into money, the proceeds were deposited in the aforesaid bank, which, no doubt, resulted in an incidental advantage to the directors owning portions of the capital stock; but that matter was adjusted in the decree to the satisfaction of the court, and may be dismissed without further comment. Some delay ensued after the bonds were issued before the money was deposited; but nothing of the kind was contemplated when the agreement was made, nor did it take place as a means of increasing the rate of interest.

Other defences failing, the suggestion is that the complainants are not *bona fide* holders of the securities for value; but the suggestion is unsupported by proof, and, of course, cannot prevail, the burden of proof being upon the respondent company. *Goodman* v. *Simonds*, 20 How. 343; *Collins* v. *Gilbert*, 94 U. S. 753.

Suffice it to say, there is no error in the record.

Decree affirmed.

BEER COMPANY v. MASSACHUSETTS.

1. An act of the legislature of Massachusetts, passed Feb. 1, 1828, to incorporate the Boston Beer Company, "for the purpose of manufacturing malt liquors in all their varieties," declared that the company should have all the powers and privileges, and be subject to all the duties and requirements, contained in an act passed March 3, 1809, entitled "An Act defining the general powers and duties of manufacturing corporations," and the several acts in addition thereto. Said act of 1809 had this clause: "*Provided always*, that the legislature may from time to time, upon due notice to any corporation, make further provisions and regulations for the management of the business of the corporation and for the government thereof, or wholly to repeal any act or part thereof, establishing any corporation, as shall be deemed expedient." In 1829, an act repealing that of 1809, and all acts in addition thereto, and reserving similar power, was passed. Under the prohibitory liquor law of 1869, certain malt liquors belonging to the company were seized as it was transporting them to its place of business in said State, with intent there to sell them, and they were declared forfeited. *Held*, 1. That the provisions of the act of 1809, touching the power reserved by the legislature, having been adopted in the charter, were a part of the contract between the State and the company, rendering the latter subject to the exercise of that power. 2. That the contract so contained in the charter was not affected by the repeal of that act, nor was its obligation impaired by the prohibitory liquor law of 1869.
2. The company, under its charter, has no greater right to manufacture or sell malt liquors than individuals possess, nor is it exempt from any legislative control therein to which they are subject.
3. All rights are held subject to the police power of a State; and, if the public safety or the public morals require the discontinuance of any manufacture or traffic, the legislature may provide for its discontinuance, notwithstanding individuals or corporations may thereby suffer inconvenience.
4. As the police power of a State extends to the protection of the lives, health, and property of her citizens, the maintenance of good order, and the preservation of the public morals, the legislature cannot, by any contract, devest itself of the power to provide for these objects.
5. While the court does not assert that property actually in existence, and in which the right of the owner has become vested when a law was passed, may, under its provisions, be taken for the public good without due compensation, nor lay down any rule at variance with its decisions in regard to the paramount authority of the Constitution and laws of the United States, relating to the regulation of commerce with foreign nations and among the several States, or otherwise, it reaffirms its decision in *Bartemeyer* v. *Iowa* (18 Wall. 129), that, as a measure of police regulation, a State law prohibiting the manufacture and sale of intoxicating liquors is not repugnant to any clause of that Constitution.

6. It appearing from the record that the point, that the prohibitory liquor law of 1869 impaired the obligation of the contract contained in the charter of the company, was made on the trial of the case, and decided adversely to the company, and was afterwards carried, by bill of exceptions, to the Supreme Court of Massachusetts, where the rulings of the lower court were affirmed, this court has jurisdiction.

ERROR to the Superior Court of the Commonwealth of Massachusetts.

This was a proceeding in the Superior Court of Suffolk County, Massachusetts, for the forfeiture of certain malt liquors, belonging to the Boston Beer Company, and which had been seized as it was transporting them to its place of business in said county, with intent there to sell them in violation of an act of the legislature of Massachusetts, passed June 19, 1869, c. 415, commonly known as the Prohibitory Liquor Law. The company claimed that, under its charter, granted in 1828, it had the right to manufacture and sell said liquors; and that said law impaired the obligation of the contract contained in that charter, and was void, so far as the liquors in question were concerned. The court refused to charge the jury to that effect, and a verdict was found against the claimant. The rulings of the Superior Court having been affirmed by the Supreme Judicial Court of the Commonwealth, the company brought the case here. The statutes of Massachusetts bearing on the case are referred to in the opinion of the court.

Mr. H. W. Paine and *Mr. F. O. Prince* for the plaintiff in error.

Although the franchise of the company, when granted, was subject to the provisions of the act of 1809, and might, while they continued in force, have been modified or revoked, after due notice, the legislature, by repealing that act, relinquished the power thereby reserved, and rendered the grant absolute and unqualified.

The franchise was that of "manufacturing malt liquors in all their varieties in the city of Boston." The power to sell, although not expressly given, was clearly implied, as otherwise the charter would have been utterly worthless. Co. Litt. 56; Shep. Touch. 49; *Thayer* v. *Payne*, 2 Cush. (Mass.) 827;

Pomfret v. *Ricroft*, 1 Saund. 321; *Darcy* v. *Askwith*, Hob. 234; *Planters' Bank* v. *Grant*, 6 How. 318; *United States* v. *Babbitt*, 1 Black, 55; *Huidekooper's Lessee* v. *Douglass*, 8 Cranch, 1; *Charles River Bridge* v. *Warren Bridge et al.*, 11 Pet. 420; *People* v. *Platt*, 17 Johns. (N. Y.) 215.

The Commonwealth having made a contract with the company, that its chartered rights and immunities should not be revoked, or its franchise essentially impaired, subsequent legislation cannot, directly or indirectly, impair the obligation of that contract, and destroy vested rights under it. Cooley, Const. Lim. 278, and cases cited; *Terrett* v. *Taylor*, 9 Cranch, 43; *Trustees of Dartmouth College* v. *Woodward*, 4 Wheat. 518; *The Binghampton Bridge*, 3 Wall. 51; *Wales* v. *Sutton*, 2 Mass. 143; *Boston & Lowell Railroad* v. *Salem & Lowell Railroad*, 2 Gray (Mass.), 1; *Piscataqua Bridge* v. *New Hampshire Bridge*, 7 N. H. 35; *Thorpe* v. *Burlington & Rutland Railroad*, 27 Vt. 140; *Farrington* v. *Tennessee*, 95 U. S. 679.

If the police power of a State, as defined in *Commonwealth* v. *Alger* (7 Cush. (Mass.) 53), be "the power vested in the legislature by the Constitution to make, ordain, and establish all manner of wholesome and reasonable laws, statutes, and ordinances, either with penalties or without, not repugnant to the Constitution, as they shall judge to be for the good and welfare of the Commonwealth and the subjects of the same," the taxing power is clearly of that character. If the legislature may, as the adjudged cases affirm, grant an immunity from taxation, and thus part with that power, why may it not with any other? It cannot, in the pretended exercise of the police power, violate, without a breach of the Constitution, the provisions of an existing charter, nor, under the guise of regulating, take from a corporation any of its essential chartered rights and privileges. Cooley, Const. Lim. 576, and cases cited.

The company does not invoke the aid of the Fourteenth Amendment to the Constitution, but submits that the statute of 1869, under which the liquor was seized and condemned, impairs the obligation of the contract contained in its charter, and is therefore unconstitutional and void. The court below having expressly decided otherwise, there can be no doubt as to the jurisdiction of this court.

Mr. Charles R. Train for the defendant in error.

The case was tried on the general issue, and the record does not present any matter of law. The opinion of the court below showing that a Federal question was considered is not decisive that it was actually raised or necessarily involved. *Moore* v. *Mississippi*, 21 Wall. 636.

The act of 1869 does not impair the obligation of a contract, inasmuch as the charter of the company, being subject to the reservation of the act of 1869, is amendable and repealable. The State may, therefore, in the exercise of her police power, subject the company to the same restraints in the use of its property as may be imposed upon natural persons. *Bartemeyer* v. *Iowa*, 18 Wall. 129; *Peik* v. *Chicago & North-Western Railway Co.*, 94 U. S. 164.

Conceding that the charter is not repealable, it is not fairly susceptible of the interpretation that it confers the absolute right to manufacture malt liquor, free from all legislative control. *Ohio Life Insurance & Trust Co.* v. *Debolt*, 16 How. 416; *Providence Bank* v. *Billings*, 4 Pet. 514; *West Wisconsin Railway Co.* v. *Board of Supervisors of Trempealeau County*, 93 U. S. 595; *Farrington* v. *Tennessee*, 95 id. 679; *Thorpe* v. *Rutland & Burlington Railroad*, 27 Vt. 142; *Commonwealth* v. *Hamilton Manufacturing Co.*, 120 Mass. 383.

The legislature could not, under the State Constitution, make a binding contract, that the police power should not be thereafter exercised so as to limit this company in the matter of manufacturing malt liquors. *Commonwealth* v. *Bird*, 12 Mass. 443; *Boston & Lowell Railroad* v. *Salem & Lowell Railroad*, 2 Gray (Mass.), 1; *Eastern Railroad* v. *Maine Railroad*, 111 Mass. 125.

The distinction between the power of the legislature in regard to the law-making and other sovereign powers on the one hand, and in regard to the property of the public on the other, is a sound one. *Boston & Lowell Railroad* v. *Salem & Lowell Railroad*, *supra*; *Piscataqua Bridge* v. *New Hampshire Bridge*, 7 N. H. 35; *Brewster* v. *Hough*, 10 id. 138; *Brick Presbyterian Church* v. *New York*, 5 Cow. (N. Y.) 538; *The Binghampton Bridge*, 3 Wall. 51; *State* v. *Noyes*, 47 Me. 189.

The abstract proposition that a person has not the constitu-

tional right to apply, in violation of a statute, his property to those uses which are injurious to the common welfare, though not forbidden by the common law, is, as matter of authority, established law. *Fisher* v. *McGirr*, 1 Gray (Mass.), 1; *Blair* v. *Forehand*, 100 Mass. 136; *Lowell* v. *Boston*, 111 id. 454; *Oviatt* v. *Pond*, 29 Conn. 479; *State* v. *Keeran*, 5 R. I. 497; *State* v. *Allmond*, 2 Houst. (Del.) 612; *Commonwealth* v. *Alger*, 7 Cush. (Mass.) 53; *Coates* v. *New York*, 7 Cow. (N. Y.) 585; *State* v. *Noyes*, 30 N. H. 279; *People* v. *Hawley*, 3 Mich. 330; *Commonwealth* v. *Tewksbury*, 11 Metc. (Mass.) 55; *New Orleans* v. *Stafford*, 27 La. Ann. 417; *State* v. *Noyes*, 47 Me. 189; *Commonwealth* v. *Blackington*, 24 Pick. (Mass.) 352; *The License Cases*, 5 How. 504; *Bartemeyer* v. *Iowa*, 18 Wall. 129; *Munn* v. *Illinois*, 94 U. S. 113.

It is clear, therefore, that the act of 1869 neither violates any provision of the Constitution of the United States, nor impairs any vested rights of the company.

The following cases hold that a prohibitory law, to the same effect as that here in question, does not interfere with the vested rights of a person who owned intoxicating liquors at the time of its enactment: *State* v. *Allmond*, 2 Houst. (Del.) 612; *State* v. *Paul*, 5 R. I. 185; *State* v. *Keeran*, id. 498; *Lincoln* v. *Smith*, 27 Vt. 328; *Gill* v. *Parker*, 31 id. 610; *State* v. *Court of Common Pleas, &c.*, 7 Vroom (N. J.), 72; *Fisher* v. *McGirr*, 1 Gray (Mass.), 1; *Commonwealth* v. *Huber*, 12 id. 29; *Commonwealth* v. *Logan*, id. 136; *People* v. *Hawley*, 3 Mich. 330; *People* v. *Gallagher*, 4 id. 244; *Our House No. 2* v. *State*, 4 Green, 172; *Sauto* v. *State*, 2 Iowa, 165; *State* v. *Bartemeyer*, 31 id. 601; *State* v. *Wheeler*, 25 Conn. 290.

MR. JUSTICE BRADLEY delivered the opinion of the court.

The question raised in this case is, whether the charter of the plaintiff, which was granted in 1828, contains any contract the obligation of which was impaired by the prohibitory liquor law of Massachusetts, passed in 1869, as applied to the liquor in question in this suit.

Some question is made by the defendant in error whether the point was properly raised in the State courts, so as to be

the subject of decision by the highest court of the State. It is contended that, although it was raised by plea, in the municipal court, yet, that plea being demurred to, and the demurrer being sustained, the defence was abandoned, and the only issue on which the parties went to trial was the general denial of the truth of the complaint. But whatever may be the correct course of proceeding in the practice of courts of Massachusetts, — a matter which it is not our province to investigate, — it is apparent from the record that the very point now sought to be argued was made on the trial of the cause in the Superior Court, and was passed upon, and made decisive of the controversy, and was afterwards carried by bill of exceptions to the Supreme Judicial Court, and was decided there adverse to the plaintiff in error on the very ground on which it seeks a reversal.

The Supreme Court, in its rescript, expressly decides as follows: —

"Exceptions overruled for the reasons following: —

"The act of 1869, c. 415, does not impair the obligations of the contract contained in the charter of the claimant, so far as it relates to the sale of malt liquors, but is binding on the claimant to the same extent as on individuals.

"The act is in the nature of a police regulation in regard to the sale of a certain article of property, and is applicable to the sale of such property by individuals and corporations, even where the charter of the corporation cannot be altered or repealed by the legislature."

The judgment of the Superior Criminal Court was entered in conformity to this rescript, declaring the liquors forfeited to the Commonwealth, and that a warrant issue for the disposal of the same.

This is sufficient for our jurisdiction, and we are bound to consider the question which is thus raised.

As before stated, the charter of the plaintiff in error was granted in 1828, by an act of the legislature passed on the 1st of February in that year, entitled "An Act to incorporate the Boston Beer Company." This act consisted of two sections. By the first, it was enacted that certain persons (named), their successors and assigns, "be, and they hereby are, made a corporation, by the name of The Boston Beer Company, for the

purpose of manufacturing malt liquors in all their varieties, in the city of Boston, and for that purpose shall have all the powers and privileges, and be subject to all the duties and requirements, contained in an act passed on the third day of March, A.D. 1809, entitled 'An Act defining the general powers and duties of manufacturing corporations,' and the several acts in addition thereto." The second section gave the company power to hold such real and personal property to certain amounts, as might be found necessary and convenient for carrying on the manufacture of malt liquors in the city of Boston.

The general manufacturing act of 1809, referred to in the charter, had this clause, as a proviso of the seventh section thereof: "*Provided always*, that the legislature may from time to time, upon due notice to any corporation, make further provisions and regulations for the management of the business of the corporation and for the government thereof, or wholly to repeal any act or part thereof, establishing any corporation, as shall be deemed expedient."

A substitute for this act was passed in 1829, which repealed the act of 1809 and all acts in addition thereto, with this qualification: "But this repeal shall not affect the existing rights of any person, or the existing or future liabilities of any corporation, or any members of any corporation now established, until such corporation shall have adopted this act, and complied with the provisions herein contained."

It thus appears that the charter of the company, by adopting the provisions of the act of 1809, became subject to a reserved power of the legislature to make further provisions and regulations for the management of the business of the corporation and for the government thereof, or wholly to repeal the act, or any part thereof, establishing the corporation. This reservation of the power was a part of the contract.

But it is contended by the company that the repeal of the act of 1809 by the act of 1829 was a revocation or surrender of this reserved power.

We cannot so regard it. The charter of the company adopted the provisions of the act of 1809, as a portion of itself; and those provisions remained a part of the charter, notwith-

standing the subsequent repeal of the act. The act of 1829 reserved a similar power to amend or repeal that act, at the pleasure of the legislature, and declared that all corporations established under it should cease and expire at the same time when the act should be repealed. It can hardly be supposed that the legislature, when it reserved such plenary powers over the corporations to be organized under the new act, intended to relinquish all its powers over the corporations organized under or subject to the provisions of the former act. The qualification of the repeal of the act of 1809, before referred to, seems to be intended not only to continue the existence of the corporations subject to it in the enjoyment of all their privileges, but subject to all their liabilities, of which the reserved legislative control was one.

If this view is correct, the legislature of Massachusetts had reserved complete power to pass any law it saw fit, which might affect the powers of the plaintiff in error.

But there is another question in the case, which, as it seems to us, is equally decisive.

The plaintiff in error was incorporated "for the purpose of manufacturing malt liquors in all their varieties," it is true; and the right to manufacture, undoubtedly, as the plaintiff's counsel contends, included the incidental right to dispose of the liquors manufactured. But although this right or capacity was thus granted in the most unqualified form, it cannot be construed as conferring any greater or more sacred right than any citizen had to manufacture malt liquor; nor as exempting the corporation from any control therein to which a citizen would be subject, if the interests of the community should require it. If the public safety or the public morals require the discontinuance of any manufacture or traffic, the hand of the legislature cannot be stayed from providing for its discontinuance, by any incidental inconvenience which individuals or corporations may suffer. All rights are held subject to the police power of the State.

We do not mean to say that property actually in existence, and in which the right of the owner has become vested, may be taken for the public good without due compensation. But we infer that the liquor in this case, as in the case of *Barte-*

meyer v. *Iowa* (18 Wall. 129), was not in existence when the liquor law of Massachusetts was passed. Had the plaintiff in error relied on the existence of the property prior to the law, it behooved it to show that fact. But no such fact is shown, and no such point is taken. The plaintiff in error boldly takes the ground that, being a corporation, it has a right, by contract, to manufacture and sell beer for ever, notwithstanding and in spite of any exigencies which may occur in the morals or the health of the community, requiring such manufacture to cease. We do not so understand the rights of the plaintiff. The legislature had no power to confer any such rights.

Whatever differences of opinion may exist as to the extent and boundaries of the police power, and however difficult it may be to render a satisfactory definition of it, there seems to be no doubt that it does extend to the protection of the lives, health, and property of the citizens, and to the preservation of good order and the public morals. The legislature cannot, by any contract, divest itself of the power to provide for these objects. They belong emphatically to that class of objects which demand the application of the maxim, *salus populi suprema lex;* and they are to be attained and provided for by such appropriate means as the legislative discretion may devise. That discretion can no more be bargained away than the power itself. *Boyd* v. *Alabama*, 94 U. S. 645.

Since we have already held, in the case of *Bartemeyer* v. *Iowa*, that as a measure of police regulation, looking to the preservation of public morals, a State law prohibiting the manufacture and sale of intoxicating liquors is not repugnant to any clause of the Constitution of the United States, we see nothing in the present case that can afford any sufficient ground for disturbing the decision of the Supreme Court of Massachusetts.

Of course, we do not mean to lay down any rule at variance with what this court has decided with regard to the paramount authority of the Constitution and laws of the United States, relating to the regulation of commerce with foreign nations and among the several States, or otherwise. *Brown* v. *Maryland*, 12 Wheat. 419; *License Cases*, 5 How. 504; *Passenger*

Cases, 7 id. 283; *Henderson* v. *Mayor of New York*, 92 U. S. 259; *Chy Lung* v. *Freeman*, id. 275; *Railroad Company* v. *Husen*, 95 id. 465. That question does not arise in this case.

Judgment affirmed.

NOYES v. HALL

1. In Illinois, open, visible, and exclusive possession of lands by a person, under a contract for a conveyance of them to him, is constructive notice of his title to creditors and subsequent purchasers.
2. A., the owner in fee of certain lands, having mortgaged them to B., to secure a debt, contracted in writing to sell and convey them to C., who thereupon, pursuant to the contract, entered on them, and thereafter remained in the open and visible possession of them. The assignee of B. subsequently brought suit to foreclose the mortgage, but failed to make C. a party. A decree by default was rendered, under which the lands were sold to D., who conveyed them to B., after C. had paid to A. all that was due upon the contract, and received from him a deed, which was in due time recorded. B. brought ejectment, and C. filed his bill to redeem. *Held*, that C., not having been served with process, was not bound by the foreclosure proceedings, and that the title which passed by the sale under them was subject to his right of redemption.

APPEAL from the Circuit Court of the United States for the Northern District of Illinois.

In April, 1858, Luther Hall, tenant in fee of certain lands in Illinois, mortgaged them to Lauren A. Noyes, to secure the payment of $1,075, and on June 4, 1859, made a contract, in writing, to sell them to Hollis S. Hall, for $3,000, payable in instalments. In February, 1860, the latter sold his interest in the lands to Wright C. Hall, who paid him $300, and assumed the conditions of his contract by making a new one with said Luther, of the same date and tenor. In March, 1860, said Wright enclosed the lands, and from that date has had open, continuous, and visible possession of them. His contract with said Luther was never recorded. Feb. 10, 1864, by deed recorded on the 19th of that month, Luther, having received all the instalments of the purchase-money for the lands, conveyed them to said Wright.

In May, 1861, Woodward, assignee of said Noyes, brought

suit in the Circuit Court of the United States for the Northern District of Illinois, to foreclose the mortgage, but failed to make said Wright a party. A decree by default was entered, under which the lands were sold in October, 1861, by a master of the court, and purchased for $400, by one Pickering. The balance of the mortgage debt was satisfied by sales of other property. Sept. 1, 1871, Pickering duly conveyed the lands to said Noyes, who, in October, 1872, brought ejectment against said Wright. The latter, on December 14, following, filed this bill, praying that the further prosecution of that action be restrained, and that he be allowed to redeem the lands.

The court decreed that said Wright was the owner in fee of the premises, and was entitled to redeem by paying $400, the amount bid at the master's sale, with interest thereon from the date of said sale, at the rate prescribed by the mortgage, amounting in all to the sum of $933.33. From that decree Noyes appealed to this court.

Mr. Elliott Anthony for the appellant.
Mr. H. D. Beam, contra.

MR. JUSTICE CLIFFORD delivered the opinion of the court.

Antecedent to the claim of the respondent, the unincumbered fee-simple title of the premises was in the father of the complainant. On the 26th of April, 1858, the owner of the tract, consisting of a farm of eighty acres, being indebted to the respondent in the sum of $1,075, mortgaged the farm to him to secure the payment of that sum.

Sufficient also appears to show that the fee-simple owner of the premises, on the 4th of June, 1859, contracted in writing with the brother of the complainant to convey the same to the other contracting party for the sum of $3,000, payments to be made as therein specified; and that the brother, eight months later, sold out his interest thus acquired to the complainant, the new contract being made by consent to bear the same date as that previously given to the brother, the complainant giving his notes in the place of those given by the brother, except for $300, which he paid in cash. Payments, except for that amount, were to be made as in the previous arrangement; and the complainant alleges that prior to the commencement of the next

year he entered into the possession of the premises, and that he has continued in the possession of the same from that time to the present.

By the terms of the agreement, the premises were to be conveyed to the complainant by a good and sufficient deed; and he alleges that the covenantor and his wife, on the 10th of February, 1864, by deed duly executed and acknowledged, conveyed the same to him; and it appears that the deed, on the 19th of the same month, was duly recorded.

Process was served; and the respondent appeared and filed an answer, in which he sets up the mortgage given by the original owner, the foreclosure of the same, the sale of the premises by the master, and his title to the same by virtue of the master's deed to the purchaser from whom he acquired the title to the premises. Proofs were taken, the parties heard, and the court entered a decree in favor of the complainant.

Due appeal was taken by the respondent to this court; and he assigns, among others, the following errors: 1. That the complainant has not made such a case as to warrant a court of equity in granting him relief. 2. That the bill of complaint does not allege any sufficient reason why it was not commenced at an earlier date. 3. That the bill of complaint does not allege that any tender of the amount required to redeem the mortgage was ever made before the commencement of the present suit. 4. That the contract to convey the land to the complainant was subsequent to the execution of the mortgage.

Both of the notes secured by the mortgage were transferred, and it appears that the assignee instituted the suit for foreclosure. When the foreclosure suit was commenced, the present complainant was in possession of the premises, having previously paid $1,000 towards the purchase of the same under his contract; and the record shows that he was not notified of the commencement or pendency of the suit.

Though in the sole possession of the premises, the complainant alleges that he was not served with process; and that no answer having been filed in the case, the bill of complaint was taken as confessed, and that a decree of foreclosure was entered, under which the premises were sold by the master for the sum of $400.

None of these matters are controverted; and it is also alleged that conveyance of the premises in due form was made by the master to the bidder, and that he conveyed the same to the respondent. Since that time, as the complainant alleges, the respondent has commenced a suit against him to recover the possession of the premises.

All of these matters are formally set forth in the bill of complaint; and the complainant alleges that the respondent neither claims nor has any other or further interest or title to the premises than that derived by purchase under the decree of foreclosure, and he avers that such title is subject to his right to redeem the premises described in the bill of complaint. Appropriate allegations are also made to show that he is entitled to such relief, upon the ground that he has been at all times since the sale of the premises ready and anxious to redeem the same from the sale and purchase; that he has offered to redeem the premises of the respondent by the payment of the said sum of $400, with interest at the rate of ten per cent from the date of the sale to the time of such tender of redemption, and that the respondent refused and still refuses to accept such payment and to release the claim and title to the premises by him so acquired; wherefore he prays that he may be declared entitled to redeem the premises by the payment of the amount of the purchase-money, with interest to the date of the decree, and that the respondent, upon the payment of such amount, may be decreed to convey to the complainant all the title and interest in the premises which he acquired by such purchase.

Deeds, mortgages, and other instruments of writing which are authorized to be recorded, take effect, by the law of that State, from and after the time of filing the same for record, and operate as notice to creditors and subsequent purchasers. Rev. Stat. of Illinois, 1874, 278, sect. 30.

Argument to show that the respondent had due notice of the claim of the complainant is quite unnecessary; as the case shows, beyond controversy, that the deed under which he acquired the title to the premises was duly recorded, and that he was, before that time, in the open, visible, and exclusive possession of the same, which, by the settled law of that State, is

constructive notice to creditors and subsequent purchasers. *Truesdale* v. *Ford*, 87 Ill. 210.

Record evidence of a conveyance operates as notice, and so may open possession: the rule being that actual, visible, and open possession is equivalent to registry. *Ccbeen* v. *Breckenridge*, 48 id. 91; *Dunlap* v. *Wilson*, 82 id. 517; *Bradley* v. *Snyder*, 14 id. 263.

Viewed in the light of these authorities and the allegations in the bill of complaint, it is clear that the first assignment of error must be overruled.

Nor is it necessary to enter into any discussion of the second error assigned, as it appears that the complainant filed the bill of complaint to redeem the premises as soon as it became necessary to vindicate his title and possession against the ejectment suit instituted by the respondent.

Beyond all doubt, the contract under which the complainant claims the right to purchase the premises is subject to the mortgage held by the respondent; but it is a sufficient answer to the third and fourth assignments of error to say that the decree sustains the validity of the mortgage, and makes ample provision to secure to the respondent all the rights which he acquired by virtue of the sale and purchase under the foreclosure. Parties interested in the premises who were not served with process are not bound by that decree, and it follows that the respondent took his title subject to the rights of the complainant acquired under the deed, just the same as if no such decree had ever been made.

Suppose that is so, then it only remains to examine the decree, and ascertain whether it makes due provision to preserve all the rights of the respondent.

Coming to the proofs, it will be sufficient to say that the finding of the court below shows that all the material allegations of the bill of complaint are fully sustained, which is all that need be said in support of the theory of fact embodied in the decree. Such being the fact, the court decreed that the complainant was entitled to relief, he paying to the respondent, within one hundred days from the date of the decree, the sum of $913.33, with costs of suit; and that in default of such payment the bill of complaint shall stand dismissed; and that the

respondent, if the payment be made, shall, within thirty days thereafter, execute to the complainant a good and sufficient deed, as prayed in the bill of complaint.

Examined in the light of these suggestions, as the case should be, it is clear that the decree is correct, and we are all of the opinion that there is no error in the record.

Decree affirmed.

YOUNG v. UNITED STATES.

1. Cotton owned by a British subject, although he never came to this country, was, if found during the rebellion within the Confederate territory, a legitimate subject of capture by the forces of the United States, and the title thereto was transferred to the government as soon as the property was reduced to firm possession.
2. Within two years after the rebellion closed, if he had given no aid or comfort thereto, he could, under the act of March 12, 1863 (12 Stat. 820), have maintained a suit in the Court of Claims, to recover the proceeds of his cotton so captured which were paid into the treasury.
3. If he furnished munitions of war and supplies to the Confederate government, or did any acts which would have rendered him liable to punishment for treason had he owed allegiance to the United States, he gave aid and comfort to the rebellion, within the meaning of that act, and was thereby excluded from the privileges which it confers.
4. By giving such aid and comfort, he committed, in a criminal sense, no offence against the United States, and he was therefore not included in the pardon and amnesty granted by the proclamation of the President of Dec. 25, 1868 (15 Stat. 711).

APPEAL from the Court of Claims.

This suit arises under the Abandoned and Captured Property Act (12 Stat. 820), and comes into this court by appeal from the judgment of the Court of Claims against John Young, trustee in bankruptcy of Alexander Collie, upon the following finding of facts: —

"I. Said Collie was a subject of the Queen of Great Britain and Ireland, at one time residing in Manchester, England, as a member of the firm of Alexander Collie & Co., but in the years 1862, 1863, and 1864, residing and doing business, in his own name, in London, England, and he has at no time been in the United States.

"II. In the year 1862, the said Collie engaged in fitting out, lading, and sending steamships to run the blockade of the ports in

States which were then in rebellion against the United States; and for about two years he continued engaged in that business, sending a large number of such vessels for that purpose, which succeeded many times in running the blockade, in and out, and carried into some of those ports general merchandise, which was there sold, and also munitions of war, to wit, arms, gunpowder, armor-plates for war-vessels, army-clothing, cannon, shot, ammunition, and quarter-master and medical stores, which were purchased in England by said Collie, or by agents of the so-called Confederate States of America, to whom, in aid of such purchases, the said Collie made large advances of money; and when said munitions of war were run into said ports, they were delivered to the government of said Confederate States. The vessels so engaged in running the blockade took back from said ports, to said Collie, large quantities of cotton, partly received from said government in payment for the munitions of war, and other things received from him, and partly bought for him by his agents in those States, with moneys derived from the sales there of the cargoes of merchandise taken into said ports by the ships of said Collie. The cotton, for the recovery of the proceeds of which this suit was brought, was purchased by said Collie's agent in the said Confederate States, with moneys so derived.

"The said Collie, on the 1st of October, 1863, addressed the following letter to John White, special commissioner for the State of North Carolina, then in England:—

"'No. 1.] 22A AUSTIN FRIARS, LONDON,

"'1st October, 1863.

"'JOHN WHITE, Esq.,

"'*Special Com'r for North Carolina:*

"'DEAR SIR, — Being desirous of aiding in any way in my power the government of your State in its present struggle, it seems to me that the time has come when this can be done very efficiently, and, with this view, I now ask your careful consideration of the following propositions:—

"'From all I can learn, the chief requirement of your country at the present moment, as far as concerns business here, is to receive supplies of railway iron, rolling-stock, and a few other articles, with regularity, expedition, and economy. To effect this I propose—

"'*First*, To furnish, with as little delay as possible, four steamers, of the most suitable description for blockade-running, of which your State will own one-fourth interest, the other three-fourths being held by myself and friends.

"'*Second*, To give up to the government of your State, when required, the entire inward carrying-power of said steamers from the island to the Confederacy, at a moderate rate, to be fixed hereafter.

"'*Third*, That the government of your State be entitled to one-fourth space of the outward carrying-power of each steamer, for cotton or other produce; and this arrangement will, I estimate, yield to your State funds sufficient to pay cost and all charges on inward cargo, cash of its share of outward cargo, and (if cotton of good quality be sent out) a very large surplus will be left at the credit of your State on each trip. If at any time there should be a deficiency of cargo for government or other account, freight will be taken, if procurable, from other parties, and a due share of any freight so carried will be credited to the State. In a business such as that now sought to be inaugurated, it is manifestly impossible to provide for all contingencies which may arise: all I can at present do is to indicate the chief aims, objects, and conditions. The rest must be left to the good faith and honorable dealing of the government of your State on the one part, and of myself on the other. I need hardly add, that any proposition from your government for altering or amending any of the conditions you and I may agree to will be met by me in the most liberal spirit, and that I place the same implicit confidence in the good faith of the governor and government of your State I ask them to place in me.

"'I remain, dear sir, yours faithfully,

(Signed) "'ALEX. COLLIE.

"On the 27th of October, 1863, the said Collie and the said White entered into the following agreement:—

"'With the view of carrying out efficiently the business indicated in the preceding letter of 1st instant, it is hereby agreed by Alexander Collie, for himself and friends, on one part, and John White, of North Carolina, for the governor of that State, on the other part, that Alexander Collie will furnish four steamers of suitable construction and speed, as soon as practicable; that one-fourth interest in each of these steamers will belong to the government of North Carolina, three-fourths owned by Alexander Collie and friends. The government will pay their share of the costs and outfit of such steamers by cotton-warrants (Manchester issue), at par, and the working expenses of such steamers will be paid by the respective owners, in their due proportion; that is, one-fourth of the working expenses will be paid by the government of North Carolina, and

three-fourths by the other owners; and if from any sufficient cause it should be deemed prudent to sell any of the steamers, the net proceeds of such sale, or any money earned, in the shape of freight, will be duly credited in like proportion. Under this contract the "Hansa" and the "Don," both most excellent boats, now running between Wilmington and the islands, will, on next arriving at the islands, be made over to the State, in the proportion of one-fourth interest in each; and these steamers will be charged, £20,000 sterling for the "Hansa," and £20,000 sterling for the "Don," this being the estimated total cost price of each at the islands, and considerably under the estimated value. Another screw-steamer, similar to the "Ceres," will be ready for sea in about four weeks, and in about two months the fourth will be despatched. By this arrangement, the chief objects sought to be obtained are,—

"'*First*, To supply railway iron and rolling-stock, and such other articles as may be needed by the State, at a moderate rate of freight, and in regular quantities.

"'*Second*, To run out regularly a quantity of cotton for the State, to enable it to benefit from the very high prices ruling here.

"'*Third*, To reduce the risk of capture as much as possible by dividing the interest of the government over four or more steamers. In order to secure the greater economy, and the more efficient working facilities, the working management of the steamers will rest in the hands of Alexander Collie & Co., who, as representing the larger proportion, will appoint the captains and officers; but no important steps, such as disposing of any of the steamers, or replacing any of them, or adding to their number, will be undertaken without the full knowledge and consent of Mr. White, the special commissioner here. Under this arrangement, the parties interested will have the benefit of a well-trained and experienced staff of men, at all points, and the government of the State, on its part, will give all the aid in its power to the efficient working of the business now inaugurated. It will give all the aid it can do to get transportation of cotton from the interior when required, and it will guarantee the undertaking from any restrictions or impediments being thrown in the way of full cargoes being obtained for each steamer of cotton or other produce with the least possible delay. The inward carrying-power of the steamer from the islands will be at the service of the State, at the rate of £5 per ton, payable at the islands, for railway iron and rolling-stock (one-fourth of which will be duly credited to the State as its interest), and arrangements will be made immediately to lay down one thousand tons of railway iron at the

islands for this purpose. For fine goods, the rate will be £30 per ton.

"'The government of the State will be the owners of outward cargo to the extent of one-fourth. Their cargoes will be purchased by the agents of Alexander Collie & Co., subject to the inspection of the government of the State, who will be debited for one-fourth of the amount, and on safe arrival in England one-fourth of the proceeds will be duly credited to the State. The commission chargeable on this business will be the usual one of two and a half per cent on purchases and realizing, and five per cent on ships' disbursements, in addition to the usual brokerage, and such charges as incurred at the islands for transshipment and storing. The government will of course have the option of putting on board their own shares of the cotton; but for many reasons this is hardly desirable. If they do so, however, the buying commission of two and a half per cent will be avoided. In cases when Alexander Collie & Co. come under cash advances for account of the State (in place of putting the cotton-warrants in the market), Alexander Collie & Co. will be entitled to a further commission of two and a half per cent for the amount of such advance, — interest at the rate of five per cent to be charged, and the same rate to be allowed when there is cash in hand. This agreement to be in force till the steamers are sold, captured, or destroyed.

(Signed) "'ALEX. COLLIE.
(Signed) "'JOHN WHITE,
"'*Commissioner for the State of North Carolina.*

"'MANCHESTER, Oct. 27, 1863.'

"In pursuance of this agreement, the said Collie sent out to Wilmington, N. C., four steamers loaded with shoes, army clothing, and other supplies, which he bought for account of the State of North Carolina; and he received back cotton from said State, in payment as well for the goods so sent as for the share of said State in said steamers.

"In the year 1863, the said Collie sold in London, for the State of North Carolina, obligations of that State, delivered to him for that purpose by the said John White, known as North Carolina cotton-warrants; which were obligations for the delivery of cotton at the port of Wilmington, or at other ports then in possession of the Confederate States; and the said Collie disposed in England of large amounts of said obligations, giving with them his agreement to hold himself personally responsible to the parties to whom he sold them for their payment by the State of North Carolina; and

he also took some of said obligations in payment for the goods which he shipped to that State.

"On the 13th of June, 1864, the said Collie entered into the following written contract with Colin J. McRae, agent of the government of said Confederate States: —

"'*Memorandum of agreement between Alexander Collie, of London, on the one part, and Colin J. McRae, as representing the government of the Confederate States of America, on the other part.*

"'1. Alexander Collie agrees to provide four large and powerful new steamers, to carry out the following arrangements, with the least possible delay.

"'2. Alexander Collie will at once cause to be purchased, under Colin J. McRae's directions, quartermaster's stores to the value of £150,000 sterling, and ordnance or medical stores to the value of £50,000 sterling, — the one subject to the inspection of Major J. B. Ferguson, the other to that of Major C. Huse.

"'3. The delivery of such purchases to extend over a period of about six months, in proportionate quantities, and shipment to be made to the Confederate States with as little delay thereafter as practicable.

"'4. Inland carriage and packing expenses to be charged in the invoice, and two and a half per cent commission to be chargeable also.

"'5. Colin J. McRae, on behalf of his government, agrees that, on arrival in the Confederacy of any goods purchased and shipped by Alexander Collie, under this agreement, such goods will be immediately claimed and taken over by the government. Fifty per cent advance will be added to the English invoice, and Alexander Collie, through his agent, will immediately receive in exchange cotton at the rate of 6*d.* (sixpence) sterling per pound.

"'6. Such cotton to class "middling," and to be delivered alongside the steamers as required, compressed, packed, and in good merchantable condition.

"'7. Full cargoes of cotton, received in exchange for goods delivered under this agreement, may be shipped by Alexander Collie, through his agent, free from any other charge or restriction whatever beyond the now existing export tax of one-eighth of a cent per pound.

"'8. No steamers to have priority in any way over those employed by Alexander Collie, in this service; and more than the four

above mentioned may be used, if Alexander Collie can arrange to put them on.

"'9. Colin J. McRae further agrees, that, to cover the expense of Alexander Collie's agencies abroad, he (Alexander Collie) is to have the privilege of providing and bringing out other cotton than that received under this agreement, to the extent of one-tenth part of the cargo-space of the respective steamers, and such cotton (or tobacco) may be shipped on same terms as indicated for government cotton; viz., free from all other charges or restrictions whatsoever, excepting the before-named export duty now existing.

"'10. This agreement is to be construed by both parties in a spirit of confidence and liberality. The one will purchase and send forward the supplies indicated, with the least possible delay; the other will deliver cotton as required, in the same way; and neither party will withhold necessary supplies, on account of any temporary shortcomings on the part of the other.

"'11. Alexander Collie's agents, with the necessary staff for attending to this business, are to be allowed the privilege of residing in the Confederacy, free from liability to conscription, and every reasonable facility is to be allowed them for effectually carrying out the terms of this agreement.

(Signed) "'ALEX. COLLIE.
"'C. J. McRAE,
"'*Agent C. S. A.*

"'LONDON, June 13, 1864.'

"Under this contract, in the winter of 1863–64, and the spring and summer of 1864, divers steamers were supplied, and importations of supplies and munitions of war for the Confederate government were run by them into Wilmington, and return-cargoes of cotton, on account of that government and of said Collie, were run by them out of that port to England.

"In March, 1864, the said Collie sent, as a present to the Confederate authorities at Wilmington, on one of his steamers engaged in running the blockade into that port, a Whitworth gun for field service, with carriage, caisson, limbers, and all other customary appendages, together with a large quantity of shot of the proper calibre for the gun, in regard to which he wrote to the Governor of North Carolina as follows:—

"'I have shipped on board the "Edith" a new kind of gun, which is reported to be particularly destructive; and I have to ask the authorities at Wilmington to accept it as a "substitute" for

some of our people, who, but for our business, would have been doing business in another capacity.'

"This gun was received by the Confederate authorities in Wilmington, and used in defence of that port and in aiding the entry into it of blockade-running steamers, by repelling the vessels of the United States engaged in pursuing those steamers.

"In the year 1864, the said Collie sent on one of his blockade-running vessels, to the government of said Confederate States, as a gift from himself, two Whitworth guns, which were received by that government and used in its service.

"In the same year, the said Collie made a donation to that government of $30,000, to aid the needy and the suffering in the insurgent States, and more particularly those who had been made so through the war.

"III. In the years 1862, 1863, and 1864, the said Collie, through an agent in the insurgent States, sent out by him in 1862, purchased, with money derived from sales of cargoes run through the blockade into ports in those States in said Collie's steamers, 3,096 bales of upland cotton, and 1,757 bales of sea-island cotton: all of which was stored in Savannah at the time of the capture of that city by the military forces of the United States in December, 1864, and was there seized and taken by those forces, and thence shipped to New York, where it was sold by an agent of the United States, and the proceeds thereof, amounting to $950,076.71, were paid into the treasury of the United States."

The case was argued by *Mr. J. Hubley Ashton* and *Mr. W. W. MacFarland* for the appellant.

I.

1. The legal character of the late rebellion as a geographical or territorial civil war, as distinguished from an insurrection or unorganized war, is a political and judicial fact, established by the doctrines of public law, recognized, formally or otherwise, by all the Great Powers of the world, and adjudged by every department of the government of the United States. Vattel, bk. iii. sect. 292; Bello, Principios de Decrecho Internacional, c. 10, p. 267; Hautefeuille, Droits et Devoirs de Nations Neutres, vol. i. p. 378; Bluntschli, Revue de Droit International, 1870, p. 455; Opinion Impartiale sur la Question de l'Alabama; Twiss, Law of Nations, War, 72; Letters

of Historicus, 132; Woolsey, Int. Law, 459; *The Prize Cases*, 2 Black, 670, 695; *Mauran* v. *Insurance Company*, 6 Wall. 1; *Thorington* v. *Smith*, 8 id. 1; *Hanger* v. *Abbott*, 6 id. 532; *Matthews* v. *McStea*, 91 U. S. 7; *New York Life Insurance Co.* v. *Statham et al.*, 93 id. 24; *United States* v. *McRae*, L. R. 8 Eq. 69; *United States* v. *Prioleau*, 2 Hem. & M. 559; Treaty of Washington; The Three Rules.

2. The relative rights and duties of foreign nations, as neutrals, and of the United States and the Confederate States, as belligerents, in the civil war, were governed by the rules of public law which define the reciprocal rights and duties of neutral and belligerent States in an international war. Grotius, de Jure Bel. ac Pac., lib. 1, c. 4, sect. 15; Hall, Rights and Duties of Neutrals, 15; Bernard, British Neutrality, 107; Wheat. Int. Law, sect. 23; Twiss, Law of Nations, War, sect. 239; Letters of Historicus, 13; Lawrence's Wheaton, p. 846, note 241; Dana's Wheaton, pp. 37, 41; *The Santissima Trinidad*, 7 Wheat. 283.

3. Commerce, on the part of neutrals, with the Confederate States was subject to be affected by the United States only in the exercise, and within the limits, of the rights which, under the public law, pertain to a belligerent in respect to neutral commerce in an international war. The law of blockade and of contraband is the same in a civil as in an international war. Grotius, de Jure Bel. ac Pac., lib. 11, c. 8, sect. 4; Lawrence's Wheaton, p. 846, note 241; *The Lisette*, 6 Rob Adm. 374; *The Treude Soetre*, id. 390; *Thirty Hogsheads of Sugar* v. *Boyle*, 9 Cranch, 191; *United States* v. *Rice*, 4 Wheat. 246; *Fleming* v. *Page*, 9 How. 608.

4. The maritime and infra-territorial commerce of neutrals with and in the territory and ports of the Confederate States was unaffected by any municipal jurisdiction, sovereignty, or legislation of the United States. Dana's Wheaton, p. 687, note 239; Correspondence between Mr. Monroe and Señor Otis, 1816, 4 Am. State Papers, 156–158; Mr. Adams to Mr. Nelson, 1823, President's Mess. and Docs., Dec. 1824, pp. 269–285; *The Georgiana and Lizzie Thompson*, 9 Op. Att'y-Gen. 140; Earl Russell to Lord Lyons, July 19, 1861, Parl. Papers, 1862, N. A. No. 1, p. 49; New Granada Civil War, Mr. Seward to

Mr. Adams, July 21, 1861 (quoting Speech of Lord Russell, June 27, 1861), Mess. and Docs., 1861–62, p. 117; Lord Russell to Mr. Stuart, Sept. 22, 1862, Papers relating to Foreign Affairs, 1862, pp. 350, 371.

5. The citizens of neutral States have the right to sell and deliver to a belligerent purchaser articles contraband of war, within neutral territory, and to export and transport such articles from the neutral to the belligerent territory (whether under maritime blockade or not) for sale to, or for the use of, the belligerent; subject only to the coexisting and conflicting right of maritime capture and prize confiscation of the peccant property, on the part of the opposing belligerent power. Vattel, bk. iii. c. 7, sect. 110; Twiss, Law of Nations, War, Pref. xvii. sect. 209; Arnould, Marine Ins. (4th ed.) 649; 3 Phill. Int. Law (ed. 1870), p. 410; 1 Kent, Com. 142; Dana's Wheaton, p. 563; Wheaton, History of Law of Nations, 312; *The Santissima Trinidad*, 7 Wheat. 283; *Seton* v. *Low*, 1 Johns. (N. Y.) Cas. 1; *Richardson* v. *Marine Insurance Co.*, 6 Mass. 113; *Ex parte Chavasse*, 11 Jur. N. S. pt. 1, 400; *The Helen*, Law Rep. 1 Ad. & Ec. 6; 3 Jefferson's Writings, 557; Mr. Hamilton's Instructions to Collectors, 1 Am. State Papers, F. R. 100; 6 Webster's Works, 452; Mr. Webster to Mr. Thompson, Ex. Doc. 27th Cong. 1841–42, vol. v., doc. 266; Message of President Pierce, Dec. 1854; Mr. Marcy to Count Sartiges, July 14, 1856, Mess. and Docs. 1856–57, p. 43; Mr. Cass to Mr. Mason, June 27, 1859, Mess. and Docs. 1859, p. 31; Mr. Seward to Mr. Romero, Dec. 15, 1862; Lord Granville's Corresp. with Count Bernstorff, For. Rels. of U. S. 1870, p. 177; Sir Edward Thornton to Lord Granville, Parl. Papers, Franco-German War, 1871, pp. 182, 204; Westlake, Commercial Blockades; Hall, Rights and Duties of Neutrals, 19, 50; De Burgh, Elements of Maritime International Law, 116; Pomeroy, Law of Maritime Warfare, N. A. Rev., April, 1872, p. 377; Contraband of War, Am. Law Rev., Jan. 1871; Kluber, Droit des Gens Modernes de l'Europe, vol. ii. sect. 239, p. 96; Reddie, Mar. Int. Law, vol. ii. p. 185; Montague Bernard, Lecture on Alleged Violations of Neutrality by England, p. 29; Letters of Historicus, p. 144.

6. Citizens of a neutral State, who violate the international

law of neutrality, unless they are found actually engaged as combatants in the war, are amenable for such offence to the sovereignty of the neutral country alone. The right of the offended belligerent, as against them, is limited to self-defence by the capture and confiscation of the peccant property involved in the particular hostile transaction. Hall, Rights and Duties of Neutrals, 26; Twiss, Law of Nations, War, sect. 214; Hautefeuille, Droits des Nations Neutres, vol. iii. pp. 224, 234; *Case of Analogues to Contraband*, *The Friendship*, *The Orozembo*, *The Atlanta*, 6 Rob. Adm. 420, 430, 440; Dana's Wheaton, p. 637, note 228; *Case of The Cagliari*, State Papers, 1857–58, p. 326; *Queen* v. *Keyn*, *Case of The Franconia*, Law Rep. 2 Ex. 63–252.

II.

The cotton in question is found to have been purchased with the proceeds of sales of general merchandise, not contraband, exported by Collie from England, in the course of his maritime commerce with the Confederate States; and he acquired, by such purchase, a valid and indefeasible title to the property. *The Sir William Peel*, 5 Wall. 517; 3 Phill. Int. Law, 742; *United States* v. *Rice*, 4 Wheat. 246. The case is free from all such doctrine as was applied in *Sprott* v. *United States*, 20 Wall. 459, and *Whitfield* v. *United States*, 92 U. S. 165.

III.

The proceeds are recoverable under the third section of the Captured and Abandoned Property Act of March 12, 1863.

The great proposition is, that Collie's acts, during the period of hostilities, were not acts of "aid or comfort to the rebellion," within the just meaning of the statute. Those only who unlawfully gave "aid or comfort to the rebellion" were intended to be affected with a disability to recover the proceeds of their captured property. The only question here is as to the legal character and quality of the claimant's acts. This court cannot attribute criminality or illegality to an act where the law imputes none (*The Louis*, 2 Dod. 249; *The Antelope*, 10 Wheat.

66); and it would be a monstrous conclusion, that he is to suffer the loss of his property for acts which, in judgment of law, are neither criminal nor illegal. The acts of Collie were not offences against the law of nations, nor crimes or offences under the municipal law of the United States. The United States had no international right to punish him, or affect him with the actual or potential forfeiture, or appropriation, of this property, on account of any thing he did during the hostilities. His acts involved, under the public law, only a certain fixed penalty; and the United States, without transcending their power under the law of nations, and an infraction of their international obligations to him and his sovereign, could not, directly or indirectly, annex to them any other penal consequences whatever.

IV.

In development of the foregoing propositions, we submit the following: —

1. Collie is a native-born British subject. Throughout the hostilities, he was domiciled in his own country. His international *status* was that of a neutral. His cotton, warehoused on land, in Savannah, in December, 1864, was *de jure* and *de facto* neutral property. In respect to this cotton, he was not an enemy, *de jure* or *de facto*, in any sense known to publicists. If captured at sea, independently of breach of blockade, it could not have been confiscated, in a prize court, as actually or constructively the property of an enemy of the United States. *The Venus*, 8 Cranch, 253; Twiss, Law of Nations, War, 300.

2. The act of March 12, 1863, is to be so interpreted and applied, as far as its language admits, as not to be inconsistent with the comity of nations, or the established rules of international law, as understood in this country. All general terms must be narrowed in construction so as to harmonize the statute with the public law. *The Charming Betsy*, 2 Cranch, 64; *United States* v. *Fisher*, id. 358; *Talbot* v. *Seeman*, 1 id. 1; Maxwell on Statutes, 122; *Queen* v. *Keyn*, Law Rep. 2 Ex. D. 63, 85, 210.

3. The subjects of neutral States were entitled, under the

public law, to stand, with respect to their captured property, upon the same footing, at least, with the inhabitants of the hostile territory, who, in judgment of law, were public enemies of the United States. *The Prize Cases*, 2 Black, 687; *Mrs. Alexander's Cotton*, 2 Wall. 419. It was not competent, therefore, for the United States, while providing for the restoration of the captured property of the latter, to appropriate like property of the former. Such discrimination would be a breach of the comity of nations, and a violation of the established principles of international law. The act of March 12, 1863, must be so construed, if possible, as to avoid such a result.

4. By the operation of that statute, and the proclamations of pardon and amnesty, as they have been given effect by this court, the United States have restored, or provided for the restoration of, the proceeds of the captured property of their enemies, rebel-enemies, and traitors in the late civil war. If, therefore, this court should finally declare that the United States have, in effect, discriminated, by this legislation, against the subjects or citizens of friendly foreign States, whose property fell under the operation of the Captured Property Act, it would be for their governments to enforce their rights by international reclamation against the United States. Rutherford's Institutes, vol. ii. bk. 2, c. 9, sect. 19; Wheaton's Life of Pinkney, pp. 193, 372; 2 Phill. Int. Law, 4 *et seq.*; *Lamar* v. *Browne*, 92 U. S. 187.

5. The modern public law discountenances and condemns as barbarous the capture and appropriation, as booty of war, of private commercial property, warehoused on land, in territory, like the city of Savannah in December, 1864, in the firm and safe occupation, control, and government of the invading belligerent. 1 Kent, Com. 92; Twiss, Law of Nations, War, sects. 64, 65; Mr. Dana's note on Distinction between Enemy's Property at Sea and on Land, Wheaton, p. 451, also p. 439; Bluntschli, Le Droit International Codif., sect. 656; Ortolan, Diplomatie de la Mer, liv. iii. c. 2.

6. This court has said that Congress recognized in this statute the enlightened maxims of the modern public law in regard to the immunity of private property on land from capture as booty of war, and that these captures were made, not for

booty, but to cripple the enemy. *United States* v. *Padelford*, 9 Wall. 531; *United States* v. *Klein*, 13 id. 128; *Haycraft* v. *United States*, 22 id. 81. The statute, in this view, has been expressly held to be a remedial statute, "requiring such a liberal construction as will give effect to the beneficent intention of Congress." *United States* v. *Padelford*, *supra*. It must receive, therefore, in every case, such an equitable interpretation as will prevent a failure of the remedy. 1 Kent, Com. 465.

7. This court cannot now decide that the capture worked a confiscation of this property, and divested absolutely the title and interest of the owner, without overruling all it has ever said in regard to this species of property. The solemn and explicit language of the court is, "that the title to the proceeds of property which came to the possession of the government by capture, with the exceptions already noticed, was in no case divested out of the original owner." *United States* v. *Klein*, *supra*.

8. The *status* of this species of property was absolutely determined by the will of Congress, as expressed in the act of March 12, 1863. *Brown* v. *United States*, 8 Cranch, 110. And the adjudicated law of this court is, that the proceeds of property taken into the custody of public officers, under that act, were impressed with a trust in favor of the former owners, and that the remedy provided for their recovery was granted, therefore, not as a matter of favor, but in performance of a duty devolving upon the government. Upon all sound principles of interpretation, therefore, the most liberal construction must be placed upon the grant of the remedy of which the words of the statute are susceptible. Vattel, bk. 2, c. 17, sect. 307.

9. The manifest policy and purpose of the statute were to impose a disability to reclaim and recover the proceeds of this species of property upon those only who committed the municipal offence of treason, or of giving aid or comfort to the rebellion, as defined by the statutes of the United States. The distinction meant to be made was between those whom the rules of international law classed as enemies; and those only who violate their allegiance were intended to be affected

with the statutory disability. *Mrs. Alexander's Cotton*, 2 Wall. 404.

10. The words of the third section of the act of 1863, under consideration, are words of technical signification in the jurisprudence of the United States, and import the political crime of treason as known to the criminal law of the country. 2 Burr's Trial, 401; *United States* v. *Greathouse et al.*, 4 Sawyer, 472; *United States* v. *Wiltberger*, 5 Wheat. 76; *United States* v. *Palmer*, 8 id. 610; *Carlisle* v. *United States*, 16 Wall. 147. The claimant never committed this or any other criminal offence against the United States. He never, therefore, gave "aid or comfort to the rebellion," within the meaning of the statute.

11. This court, in a long line of solemn adjudications, has, in effect, declared that the interpretation we place upon these words is the true one, and that those only who were amenable to the laws of the United States prescribing punishment for treason and for giving aid and comfort to the rebellion, and violated those laws, are to be deemed affected by this statutory penal disability. The court has construed the statute as a penal fulmination against those who were guilty of participation in the treason of the rebellion. The disability has been adjudged to be directly annexed to the offence of giving aid and comfort to the rebellion, and as a penalty for that offence; otherwise it could never have been held removable by pardon, so as to give the pardoned claimant a standing in the Court of Claims. *Mrs. Alexander's Cotton*, *United States* v. *Padelford*, *United States* v. *Klein*, *Carlisle* v. *United States*, *supra*; *Armstrong* v. *United States*, 13 Wall. 154; *Pargoud* v. *United States*, id. 156.

12. Upon no other view, as applied to the subjects of foreign States, is the statute conformable to the principles of international law, the rules of natural justice, or the general doctrines of the municipal jurisprudence of the United States and other civilized nations. The United States had no international right to subject citizens of foreign States, not amenable to their jurisdiction, to the treatment received by their domestic criminals.

V.

If it shall be held that the claimant has been excluded from the benefits of the act of March 12, 1863, by reason or on account of his acts during the war, such exclusion can be regarded in no other light than as a punishment for such acts, and thus constitutes them, however wrongfully, offences against the United States. It was competent for the President to relieve him from such punishment, and he did so by his proclamation of general amnesty of Dec. 25, 1868. 15 Stat. 712.

The power of the President to pardon is coextensive with that of Congress to punish, and includes as well the remission of penalties and forfeitures, as the removal of disabilities annexed to the commission of offences against the United States. *United States* v. *Wilson*, 7 Pet. 150; *Ex parte Wells*, 18 How. 307.

Mr. Attorney-General Devens and *Mr. Assistant-Attorney-General Smith, contra.*

I.

While conceding the recognition of belligerent rights as belonging to both parties during the late civil war, we do not overlook the important qualification that the United States did not, by recognition of the insurgents as belligerents, abridge any of its sovereign powers, but merely waived their assertion as to persons engaged in rebellion.

Because of this state of belligerency, the United States possessed the right of capture. The seizure of this cotton was an exercise of it. *Haycraft* v. *United States*, 22 Wall. 81.

Legislation did not confer, but only modified, this right. *Smith* v. *Brazleton*, 1 Heisk. (Tenn.) 59–61; *Price* v. *Poynter*, 1 Bush, 388–395; *Mrs. Alexander's Cotton*, 2 Wall. 419, 420; *The Prize Cases*, 2 Black, 671; *Brown* v. *United States*, 8 Cranch, 122, 123, 149–151, 154; Upton, Mar. Warf. (1861), 87; No. Am. Rev. for April, 1872, 399; *Planters' Bank* v. *Union Bank*, 16 Wall. 483; *Coolidge* v. *Guthrie*, 8 Am. Law

Reg. N. S. 24; *The Emulous*, 1 Gall. 582, 583; *Gray Jacket*, 5 Wall. 369; *United States* v. *Padelford*, 9 id. 531; *Miller* v. *United States*, 11 id. 268; *Sprott* v. *United States*, 20 id. 459; *Lamar* v. *Browne*, 92 U. S. 187.

II.

The property being captured, the title thereto vested wholly in the United States, qualified only by legislation, and to the extent that the statutes expressly declare. No man could thereafter deraign title thereto, nor claim its avails, except through the United States, and by showing the chain of circumstances which the statutes prescribed to constitute a valid claim to the net proceeds. *Lamar* v. *Browne*, *supra*; *Brown* v. *United States*, 8 Cranch, 131, per Story, J.; *The Elsebe*, 5 C. Rob. 173, 181 *et seq.*; *The Melomane*, id. 41, 48; *The Mary Francoise*, 6 id. 282; *The French Guiana*, 2 Dod. 151; *The Thetis*, 3 Hag. Adm. 231; *The Joseph*, 1 Gall. 558; *The Liverpool Hero*, 2 id. 188, 189; *Alexander* v. *Duke of Wellington*, 2 Russ. & M. 54; *Taylor* v. *Nashville & Chattanooga Railroad Co.*, 6 Coldw. (Tenn.) 649; Vattel, bk. 3, c. 11, sect. 229; 3 Phil. Int. Law, 209–212, sect. 180; *Haycraft* v. *United States*, 22 Wall. 81.

III.

The right of capture applied to the property of a non-resident alien, bought by him *flagrante bello*, and paid for by goods and munitions run through the blockade. It applied to such property as this was, from its very nature and situation, irrespective of ownership. Had its nature been different, the United States possessed the right to treat it as enemy property, if it belonged to an alien who, by the gift of money and guns to its foes, and by entering into partnership with them, had constituted himself, in fact, an enemy also; so that he could no longer rightfully claim to be considered as a neutral, even though his country were so.

The capture and retention of the property by the United States was justified on the triple ground of its ownership, its nature, and the character of the transactions in it. *Miller* v.

United States, 11 Wall. 311, 312; *The Prize Cases*, 2 Black, 674; *Kennett* v. *Chambers*, 14 How. 48, 49; *Price* v. *Paynter*, 1 Bush (Ky.), 392; 2 Twiss, Law of Nations, 485, sect. 215; 1 Levi, Int. Law, Introd. xlv., xlvi.; 1 Chitty, Comm'l Law, 395; Chitty's Vattel, 328, bk. 3, c. 6, pp. 96, 333, sect. 102; 3 Phillimore, Int. Law, 728; 1 Kent, Com. *80; Halleck, Int. Law, 715, sect. 25, and 720, sect. 34; *Bentzon* v. *Boyle*, 7 Cranch, 199; *The William Bagaley*, 5 Wall. 405, and citations; *Cummings* v. *Diggs*, 1 Heisk. (Tenn.) 72, 73; *The Mary Clinton*, Blatchf. Prize Cases, 560; *The Phenix*, 5 C. Rob. 21; *The Vrow Anna*, id. 161; 4 id. 119; *The Ann Green*, 1 Gall. 286, and citations; Levi, Int. Law, Introd. xliv.; Upton, Mar. Warf. c. 3, pp. 44 *et seq.*, 64, 69 *et seq.*; 1 Chitty Comm'l Law, c. 8, pp. 395 *et seq.*, 404, 406, 408 *et seq.*, and citations; Thompson, Laws of War, c. 1, sect. 2, pp. 21, 27, 28; *Miller* v. *United States*, 11 Wall. 268; 3 Phillimore, Int. Law, sect. 484, citing *The Susa*, 2 C. Rob. 255; *The Rendsborg*, 4 id. 121.

The government does not claim to punish Collie, nor to affect him with any forfeiture for an offence; but insists that the property was rightfully captured, and that a complete title thereby vested in the United States, which could do therewith as it pleased, and direct what should constitute a claim under its grant to the proceeds.

IV.

The right to capture, absolutely and irrevocably, was at least as extensive within hostile territory as upon the high seas. The ground of seizure on the ocean is, that "it is a part of the theatre of war." De Burgh, Mar. Int. Law, 1, 2; 2 Twiss, Law of Nations, 440; 2 Wildman, Inst. of Int. Law, 1, 9; Dana's Wheaton, sect. 355, note 171; Halleck, Laws of War, 446, c. 19, sect. 1, 714, c. 29, sect. 25, 721, sect. 35; Levi, Com. Law, Introd. xliv.

The right of seizure is universal "wherever the property is found. The protection of neutral territory is an exception to the general rule only." *The Vrow Anna*, 5 C. Rob. 17.

V.

The United States was always rightfully sovereign at Savannah, even while there as a belligerent. It acted in the war in both capacities. *Rose* v. *Himely*, 4 Cranch, 272; *Gelston* v. *Hoyt*, 3 Wheat. 824; *Prize Cases*, 2 Black, 673; *Miller* v. *United States*, 11 Wall. 306, and citations; *Lamar* v. *Browne*, 92 U. S. 187; *United States* v. *Diekelman*, id. 520; *Hammond* v. *State*, 3 Coldw. (Tenn.) 138; *Billgerry* v. *Branch*, 19 Gratt. (Va.) 401–408, per Rives, J.; Savigny, Int. Law, 138, c. 1, sect. 24; Westlake, Int. Law, 243, c. 8, sect. 260.

Collie's title was acquired subject to the liability of its being then and there defeated by a capture *jure belli*. *The Santissima Trinidad*, 7 Wheat. 283.

Its acquisition by him violated the rights and public policy of the United States as a sovereign, as well as its belligerent rights. *Kennett* v. *Chambers*, 14 How. 38, 50–52; *Totten* v. *United States*, 92 U. S. 105; *Whitfield* v. *United States*, id. 165; *Desmare* v. *United States*, 93 id. 605; *Sprott* v. *United States*, 20 Wall. 459; *The Ann Green*, 1 Gall. 287.

VI.

The only question really at issue is, has Collie brought his case within the strict terms of the statute under which alone the Court of Claims has jurisdiction to give him judgment for the proceeds of this cotton? Rev. Stat., sect. 1074; *Haycraft* v. *United States*, 22 Wall. 92.

Is he "a qualified proprietor," entitled to receive restitution? *The Vrow Anna*, 5 C. Rob. 168; *Lopez* v. *Burslem*, 4 Moo. P. C. C. 305; Creasy, Int. Law, 517, sect. 488.

No such proof has been or can in fact be made. The appellant claims that the proclamation of general amnesty is the substitute for and equivalent of such proof. About the effect of a pardon "in cases where it applies," there is no difference of opinion. *Carlisle* v. *United States*, 16 Wall. 151.

It does not apply to Collie.

1. It is offered only by the sovereignty to those owing it allegiance. *Lamar* v. *Browne*, 92 U. S. 187.

2. A pardon is personal. Collie was not a criminal, liable to

indictment under the laws of the United States, when the proclamation of Dec. 25, 1868, was issued. His property was not seized for forfeiture as that of an offender; therefore, it is not to be restored after the proclamation. *Miller* v. *United States*, 11 Wall. 305. It was seized on account of belligerency, not of crime. Belligerency, as a *status* of individuals or of property, ceased when the war did; but the doctrine of *uti possidetis* applied to property already acquired by the government by capture, unless, and then only, so far as it chose otherwise to provide by statute.

It is only offences against the United States that the President can pardon, *i.e.* crimes. Const., art. 2, sect. 11, c. 1; *Ex parte Bollman*, 4 Cranch, 75; *United States* v. *Hudson*, 7 id. 32; *United States* v. *Coolidge*, 1 Wheat. 415; *United States* v. *Bevans*, 3 id. 336.

Of every pardon there must be an acceptance or performance of its condition where conditional. *United States* v. *Wilson*, 7 Pet. 161; *Armstrong* v. *United States*, 13 Wall. 155; *Ex parte Wells*, 18 How. 307; *Semmes* v. *United States*, 91 U. S. 27; *Knote* v. *United States*, 95 id. 149; *Cook* v. *Freeholders of Middlesex*, 26 N. J. L. 329–331, 334, 339, 341–343, 345, 346; S. C. 27 id. 637; *Deming's Case*, 10 Johns. (N. Y.) 232, 233.

MR. CHIEF JUSTICE WAITE delivered the opinion of the court.

Beyond all doubt, the late rebellion against the government of the United States was a sectional civil war; and all persons interested in or affected by its operations are entitled to have their rights determined by the laws applicable to such a condition of affairs. It is equally beyond doubt that, during the war, cotton, found within the Confederate territory, though the private property of non-combatants, was a legitimate subject of capture by the national forces. We have many times so decided, and always without dissent. *Mrs. Alexander's Cotton*, 2 Wall. 404; *United States* v. *Padelford*, 9 id. 531; *Sprott* v. *United States*, 20 id. 459; *Haycraft* v. *United States*, 22 id. 81; *Lamar* v. *Browne*, 92 U. S. 187.

The authority for the capture was not derived from any particular act of Congress, but from the character of the prop-

erty, — it being "potentially an auxiliary" of the enemy, and constituting a means by which they hoped and expected to perpetuate their power. As was well said by the late Chief Justice in Mrs. Alexander's case (*supra*), where this question first arose: "Being enemies' property, the cotton was liable to capture and confiscation by the adverse party. It is true that this rule, as to property on land, has received very important qualifications from usage, from reasonings of enlightened publicists, and from judicial decisions. It may now be regarded as substantially restricted 'to special cases, dictated by the necessary operation of the war,' and as excluding, in general, 'the seizure of the private property of pacific persons for the sake of gain.' The commanding general may determine in what special cases its more stringent application is required by military emergencies; while considerations of public policy and positive provisions of law, and the general spirit of legislation, must indicate the cases in which its application may be properly denied to the property of non-combatant enemies. In the case before us, the capture seems to have been justified by the peculiar character of the property, and by legislation. It is well known that cotton has constituted the chief reliance of the rebels for means to purchase the munitions of war in Europe. It is a matter of history that, rather than permit it to come into the possession of the national troops, the rebel government has everywhere devoted it, however owned, to destruction. The value of that destroyed at New Orleans, just before its capture, has been estimated at $80,000,000. . . . The rebels regard it as one of their main sinews of war; and no principle of equity or just policy required, when the national occupation was itself precarious, that it should be spared from capture, and allowed to remain, in case of the withdrawal of the Union troops, an element of strength to the rebellion."

No better evidence can be found of the value of cotton as an element of strength to the insurgents than is contained in this record. It there appears that the "chief requirement" of the Confederate government from abroad was warlike supplies, and that an outward cargo of cotton of one-fourth the carrying capacity of a vessel would pay for a full inward cargo of muni-

tions of war, and leave a "very large surplus" to the credit of that government.

As war is necessarily a trial of strength between the belligerents, the ultimate object of each, in every movement, must be to lessen the strength of his adversary, or add to his own. As a rule, whatever is necessary to accomplish this end is lawful; and, as between the belligerents, each determines for himself what is necessary. If, in so doing, he offends against the accepted laws of nations, he must answer in his political capacity to other nations for the wrong he does. If he oversteps the bounds which limit the power of belligerents in legitimate warfare, as understood by civilized nations, other nations may join his enemy, and enter the conflict against him. If, in the course of his operations, he improperly interferes with the person or property of a non-combatant subject of a neutral power, that power may redress the wrongs of its subject. But an aggrieved enemy must look alone for his indemnity to the terms upon which he agrees to close the conflict.

All property within enemy territory is in law enemy property, just as all persons in the same territory are enemies. A neutral, owning property within the enemy's lines, holds it as enemy property, subject to the laws of war; and, if it is hostile property, subject to capture. It has never been doubted that arms and munitions of war, however owned, may be seized by the conquering belligerent upon conquered territory. The reason is that, if left, they may, upon a reverse of the fortunes of war, help to strengthen the adversary. To cripple him, therefore, they may be captured, if necessary; and whether necessary or not, must be determined by the commanding general, unless restrained by the orders of his government, which alone is his superior. The same rule applies to all hostile property.

The rightful capture of movable property on land transfers the title to the government of the captor as soon as the capture is complete, and it is complete when reduced to "firm possession." There is no necessity for judicial condemnation. In this respect, captures on land differ from those at sea.

The government of the United States, in passing the Abandoned and Captured Property Act, availed itself of its just

rights as a belligerent, and at the same time recognized to the fullest extent its duties under the enlightened principles of modern warfare. The capture of cotton, and certain other products peculiar to the soil of the Confederacy, had become one of the actual necessities of the war. In no other way could the resources of the enemy be so effectually crippled. In fact, as was said in *Lamar* v. *Browne* (*supra*), "It is not too much to say that the life of the Confederacy depended as much upon its cotton as it did upon its men." "It [cotton] was the foundation upon which the hopes of the rebellion were built."

Under such circumstances, it might have been destroyed, if necessary, as it often was by the insurgents; but as the destruction of property should always be avoided, if possible, Congress provided for its capture, preservation, and sale. In this way, while kept out of the Confederate treasury, it was saved for the purposes of trade and commerce. By this means, the national government acted with double power upon the strength of the enemy: first, by depriving them of the means of supplying the demand for their products; and, second, by lessening the demand. It was to avoid this last effect of the capture that the insurgents preferred to destroy property rather than permit it to fall into the hands of the national forces.

While all residents within the Confederate territory were in law enemies, some were in fact friends. In the indiscriminate seizure of private property, it seemed to Congress that friends might sometimes suffer. Therefore, to save them, it was provided that property, when captured, should be sold, and the proceeds paid into the treasury of the United States. That being done, any person claiming to have been the owner might, at any time within two years after the close of the rebellion, bring suit in the Court of Claims for the proceeds; and on proof "of his ownership of said property, of his right to the proceeds thereof, and that he has (had) never given aid or comfort to the present rebellion," "receive the residue of such proceeds, after the deduction of any purchase-money which may have been paid, together with the expense of transportation and sale of said property, and any other lawful expenses attending the disposition thereof." 12 Stat. 820. As to all persons within the privileges of the act, the proceeds were held in trust, but

as to all others the title of the United States as captor was absolute. Whoever could bring himself within the terms of the trust might sue the United States and recover, but no one else.

It has been decided that this right of suit was given to the subjects of Great Britain, whose property had been taken, as well as to citizens of the United States. *United States* v. *O'Keefe*, 11 Wall. 178; *Carlisle* v. *United States*, 16 id. 147. The present claimant was a British subject.

There can be no doubt that the words "aid or comfort" are used in this statute in the same sense they are in the clause of the Constitution defining treason (art. 3, sect. 3), that is to say, in their hostile sense. The acts of aid and comfort which will defeat a suit must be of the same general character with those necessary to convict of treason, where the offence consists in giving aid and comfort to the enemies of the United States. But there may be aid and comfort without treason; for "treason is a breach of allegiance, and can be committed by him only who owes allegiance, either perpetual or temporary." *United States* v. *Wiltberger*, 5 Wheat. 96. The benefits of the statute are withheld not for treason only, but for giving aid and comfort as well. A claimant to be excluded need not have been a traitor: it is sufficient if he has done that which would have made him a traitor if he had owed allegiance to the United States.

This, we think, was the manifest intention of Congress. It must be remembered that the statute was passed March 12, 1863, in the dark hours of the national cause. The "Florida" and the "Alabama," built in Great Britain, were then in the midst of their successful cruises against the commerce of the United States. Nassau, in the island of New Providence, was the principal port of entry of the insurgents for blockade-running purposes, and aid and comfort from those who could not be guilty of treason were being sent in every conceivable form into the Confederacy through every port not sealed against approach by an absolutely effective blockade. The great object of all was to secure the enormous profits to be realized by an exchange of the "chief requirement" of the enemy for their great staple, cotton. For this, all risks of capture and confisca-

tion were assumed, and the arm of the rebellion upheld. That it was the intention of Congress to permit foreign owners of cotton thus acquired to sue the United States for its proceeds, when captured, cannot for a moment be believed.

A non-resident alien need not expose himself or his property to the dangers of a foreign war. He may trade with both belligerents or with either. By so doing he commits no crime. His acts are lawful in the sense that they are not prohibited. So long as he confines his trade to property not hostile or contraband, and violates no blockade, he is secure both in his person and his property. If he is neutral in fact as well as in name, he runs no risk. But so soon as he steps outside of actual neutrality, and adds materially to the warlike strength of one belligerent, he makes himself correspondingly the enemy of the other. To the extent of his acts of hostility and their legitimate consequences, he submits himself to the risk of the war into whose presence he voluntarily comes. If he breaks a blockade or engages in contraband trade, he subjects himself to the chances of the capture and confiscation of his offending property. If he thrusts himself inside the enemies' lines, and for the sake of gain acquires title to hostile property, he must take care that it is not lost to him by the fortune of war. While he may not have committed a crime for which he can be personally punished, his offending property may be treated by the adverse belligerent as enemy property. He has the legal right to carry, to sell, and to buy; but the conquering belligerent has a corresponding right to capture and condemn. He enters into a race of diligence with his adversary, and takes the chances of success. The rights of the two are in law equal. The one may hold if he can, and the other seize.

Collie, having been a non-resident alien, was not a traitor; but in his foreign home he seems to have done as much as any one private person could do to aid and assist the insurgents in their struggle for supremacy. The case shows that, as early as October, 1863, he entered into a contract of copartnership with the government of the State of North Carolina, the sole object of which was to provide the "country" with its "chief requirement" from abroad of warlike supplies, "with regularity, expedition, and economy," and to assist in running out regularly

through the blockade "a quantity of cotton for the State, to enable it to benefit from the very high prices ruling" in Great Britain. During the previous year, he was largely engaged in running the blockade, and supplying the government of the Confederacy with all kinds of munitions of war. He also acted as the agent of the State of North Carolina for the sale in England of its "obligations for the delivery of cotton at the port of Wilmington, or other ports in possession of the Confederate States," sometimes guaranteeing payment. In the following year, he entered into a contract with the government of the Confederate States, to cause to be purchased, and delivered through the blockade, quartermaster's stores and ordnance and medical stores of the value of £200,000, for which he was to be paid, on arrival "in the Confederacy," in cotton at sixpence sterling per pound, adding fifty per cent to the English invoice. For this he was granted special privileges. His cotton was to be shipped "free from any charge or restrictions whatever beyond the . . . existing export tax of one-eighth of a cent per pound," and no steamers were to have priority over his in that service. His "agents, with the necessary staff for attending to his business, are (were) to be allowed the privilege of residing in the Confederacy free from liability to conscription, and every facility is (was) to be allowed them for effectually carrying out the terms of this (the) agreement." During the same year, he sent through the blockade and presented to the government of North Carolina "a new kind of gun, reported to be peculiarly destructive," which he asked the authorities at Wilmington to accept (using his language) "as a 'substitute' for some of our people, who but for our business would have been doing business in another capacity." This gun was afterwards used by the Confederate authorities, as it was clearly intended by him to be, to aid the entry of blockade-runners into the port of Wilmington by repelling the pursuing vessels of the United States. At another time he sent two Whitworth guns through the blockade, as a gift from himself, which were accepted by the government and used in its service.

Had these things been done by a citizen of the United States, he would have been guilty of treason; and, had they

been done by the government of which Collie was a subject, it could justly be charged with having been an ally of the enemy. Clearly, Collie was in league with the Confederate government; and, as was said by Mr. Chief Justice Marshall, in *Ex parte Bollman* and *Ex parte Swartwout* (4 Cranch, 75), "All those who perform any part, however minute, or however remote from the scene of action, and who are actually leagued in general conspiracy, are to be considered as traitors." In East's Pleas of the Crown, the same principle is thus stated: "Every species of aid or comfort, in the words of the act, which, when given to a rebel within the realm, would make the subject guilty of levying war, if given to an enemy, whether within or without the realm, would make the party guilty of adhering to the king's enemies." 1 East, P. C. 78. And Mr. Justice Foster, in his Discourse on Treason, says: "Furnishing rebels or enemies with money, arms, or ammunition, or other necessaries, will *prima facie* make a man a traitor." Foster's Crown Law, 217. Mr. Justice Field, in *United States* v. *Greathouse* (4 Sawyer, 472), states the same doctrine in this language: "Wherever overt acts are committed, which in their natural consequence, if successful, would encourage and advance the interests of the rebellion, in judgment of law aid and comfort are given."

If, then, Collie had owed allegiance to the United States, it is clear that, aside from all questions of pardon and amnesty, he would have been excluded from the privileges of the statute under which he claims. His acts were hostile acts, and, as has already been seen, the same rule of exclusion applies to him as an alien, that would if he had been a citizen.

This brings us to inquire as to the effect of the proclamation of pardon and amnesty issued by the President Dec. 25, 1868. 15 Stat. 711. By that proclamation, there was granted to every person, within the scope of the pardoning power of the President, who directly or indirectly participated in the rebellion, "full pardon and amnesty for the offence of treason against the United States, or of adhering to their enemies dur ing the late civil war, with restoration of all rights, privileges, and immunities, under the Constitution and the laws . . . made in pursuance thereof." This was done to "secure per-

manent peace, order, and prosperity throughout the land, and to renew and fully restore confidence and fraternal feeling among the whole people, and their respect for and attachment to the national government, designed by its patriotic founders for the general good."

The President has the constitutional "power to grant reprieves and pardons for offences against the United States, except in cases of impeachment." Art. 2, sect. 2. The pardon is of the offence, and, as between the offender and the offended government, shuts out from sight the offending act. But if there is no offence against the laws of the United States, there can be no pardon by the President.

This court has decided, in reference to the Abandoned and Captured Property Act, that a pardon relieves the owner of captured property from the necessity of proving he did not give aid and comfort to the rebellion, because the pardon is equivalent to actual proof of his unbroken loyalty. The language of the late Chief Justice, speaking for the court, in *United States* v. *Padelford* (*supra*), is, "The law makes the proof of pardon a complete substitute for proof that he gave no aid or comfort to the rebellion." This is now the settled rule of decision here, and is not to be disturbed. As the United States were, during the war, both belligerent and sovereign, they could act in either capacity, and with all the powers of both. A part of their citizens, assuming that their allegiance to their States was superior to that which they owed the United States, rebelled. The nation, as a nation, protested against this assumption, and the two contending parties appealed to arms. The result was in favor of the United States. In a spirit of conciliation, the nation has pardoned those who, owing it allegiance, have made war upon it, and closed the eyes of the government to their offending acts. It was a bounty extended to them for their return to allegiance. Collie, though by reason of his hostile acts an enemy, was not a traitor. He was no offender, in a criminal sense. He had committed no crime against the laws of the United States or the laws of nations, and consequently he was not, and could not be, included in the pardon granted by the President in his proclamation. His offending acts, therefore, have not been shut out, and he and his representa-

tives remain subject to all his original disabilities under the statute.

Property captured during the war was not taken by way of punishment for the treason of the owner, any more than the life of a soldier slain in battle was taken to punish him. He was killed because engaged in war, and exposed to its dangers. So property was captured because it had become involved in the war, and its removal from the enemy was necessary in order to lessen their warlike power. It was not taken because of its ownership, but because of its character. But for the provisions of the Abandoned and Captured Property Act, the title to and the proceeds of all captured property would have passed absolutely to the United States. By that act, however, the privilege of suing for the proceeds in the treasury was granted to such owners as could show they had not given aid or comfort to the rebellion. This was a reward for loyalty, not a punishment for disloyalty. Collie has been deprived of no right he ever had. Neither he nor any one similarly situated has ever been permitted to sue the United States in their own courts upon such a claim. What he asks is not a restoration to a right which he once had, and by his misconduct has lost, but the grant of a privilege which those who have never given aid or comfort to the rebellion, or who, owing allegiance to the United States, have been pardoned for their offence of disloyalty, now possess. He labors under no disability in respect to any right he ever had. What he wants is the grant of a new right.

If his property was captured by the United States, under circumstances which entitled him to require its restoration, the law of nations gave him the right to prosecute his claim through his own government for the loss he sustained. That right was not taken from him by the Abandoned and Captured Property Act. It was open to him from the first moment of the capture. All he had to do was to induce his government to assume the responsibility of making his claim, and then the matter would be "prosecuted as one nation proceeds against another, not by suit in the courts as matter of right, but by diplomatic representations, or, if need be, by war." In such cases, "it rests with the sovereign against whom the demand is

made, to determine for himself what he will do with it. He may pay or reject it; he may submit to arbitration, open his own courts to suit, or consent to be tried in the courts of another nation. All depends upon himself." *United States* v. *Diekelman*, 92 U. S. 520. This was the only right Collie had when his cotton was taken, and the United States have never consented to grant him any other. While the President, by his pardon, may restore lost rights, it has never been supposed that in such a way he can grant new ones.

It may be that foreigners who have given aid and comfort to the enemies of the United States are in equity as much entitled to the privileges of the act as the pardoned enemies themselves; but that is for Congress to determine, and not for us. We have decided that the pardon closes the eyes of the courts to the offending acts, or, perhaps more properly, furnishes conclusive evidence that they never existed as against the government. It is with the legislative department of the government, not the judicial, to say whether the same rule shall be applied in cases where there can be no pardon by the President. A pardon of an offence removes the offending act out of sight; but, if there is no offence in the eye of the law, there can be no pardon. Consequently, the acts which are not extinguished by a pardon remain to confront the actor.

Judgment affirmed.

MR. JUSTICE FIELD dissented.

SHILLABER v. ROBINSON.

1. A deed of land, with a power of sale, to secure the payment of a debt, whether made to the creditor or a third person, is, in equity, a mortgage, if there is left a right to redeem on payment of such debt.
2. Sales under such a power have no validity unless made in strict conformity to the prescribed directions. Therefore, a sale made on a notice of six weeks, instead of twelve, as required by the mortgage and the statute of the State where the lands are situate, is absolutely void, and does not divest the right of redemption.
3. A person holding the strict legal title, with no other right than a lien for a given sum, who sells the land to innocent purchasers, must account to the owners of the equity of redemption for all he receives beyond that sum.

APPEAL from the Circuit Court of the United States for the Eastern District of New York.

The original transaction, which gave rise to the present suit, was a sale by John Shillaber of about three thousand acres of land, in the State of Illinois, to John Robinson, the appellee. The contract was evidenced by a written agreement, by which it appears that Robinson, in part payment of the Illinois land, was to convey to Shillaber three different parcels of land, lying in the State of New York, — one in Kings, one in Sullivan, and one in Essex, County.

On this contract, a suit, in the nature of a bill for specific performance, was brought, in the Circuit Court of Ogle County, Illinois, by Robinson against Shillaber. The latter having subsequently died, his sole heir, Theodore Shillaber, was sub stituted as defendant. The suit resulted in a decree which, among other things, established an indebtedness of Shillaber to Robinson, on final accounting, of $4,249.58; and ordered that, on the payment of this sum, Robinson should convey to Shillaber the lands in New York, already mentioned. In order that the whole matter should be finally disposed of, the decree then ordered that Robinson and wife should make and deposit with the clerk of the court a good and sufficient conveyance for said lands, as an escrow, to be delivered to Shillaber on his payment of the sum aforesaid within ninety days. It further provided that, if the money was not paid by Shillaber within that time, Robinson should convey the lands, in trust, to Silas Noble, who "should proceed to sell the same, in such manner, and after giving such reasonable notice of the time and place of such sale, as might be usual or provided by law in the State of New York;" and out of the proceeds pay the expenses of the trust and the money due Robinson, with interest, and hold the remainder, if any, subject to the order of the court.

Shillaber did not pay the money as ordered by the decree. Robinson then made the deed of trust to Noble, in strict accordance with the terms of the decree; and Noble, after giving notice of sale, by publication once a week for six weeks successively in the "Brooklyn Standard," sold, at public auction, on the sixteenth day of March, 1861, the lands to John A. Robinson, for the sum of $1,950, and made to him a conveyance of

the same. Said John A. Robinson purchased the lands for the benefit of John Robinson. Neither the deed from John Robinson to Noble, nor that from the latter to John A. Robinson, was placed upon record.

Since that time, and before the commencement of the present suit, John Robinson sold all these lands to divers and sundry individuals, for sums amounting in the aggregate to $9,628.

The present suit was commenced in November, 1870, in the Circuit Court for the Eastern District of New York, by Theodore Shillaber against John Robinson, requiring him to account for the value of the New York lands, on the ground that he had never acquired any other title to them than that which he held when the decree of the Illinois court was made, and that, since the purchasers from him were innocent purchasers, without notice of Shillaber's rights, their title was perfect, and Robinson was liable to him on a final settlement for the value of the lands, less the sum which Shillaber owed him, as ascertained by the decree in the Illinois court.

The court, on hearing, dismissed the bill; whereupon Shillaber appealed here,

The provisions of the New York Revised Statutes, regarding notice, are as follows: —

"SECT. 3. Notice that such mortgage will be foreclosed by a sale of the mortgaged premises, or some part of them, shall be given as follows: —

"(1.) By publishing the same for twelve weeks successively, at least once in each week, in a newspaper printed in the county where the premises intended to be sold shall be situated, or, if such premises shall be situated in two or more counties, in a newspaper printed in either of them.

"(2.) By affixing a copy of such notice, at least twelve weeks prior to the time therein specified for the sale, on the outward door of the building where the county courts are directed to be held, in the county where the premises are situated; or, if there be two or more such buildings, then on the outward door of that which shall be nearest the premises. And by delivering a copy of such notice, at least twelve weeks prior to the time therein specified for the sale, to the clerk of the county in which the mortgaged premises are situated, who shall immediately affix the same in a book prepared and kept by him for that purpose; and who shall also enter in said

book, at the bottom of such notice, the time of receiving and affixing the same, duly subscribed by said clerk, and shall index such notice to the name of the mortgagor; for which service the clerk shall be entitled to a fee of twenty-five cents.

"(3.) By serving a copy of such notice, at least fourteen days prior to the time therein specified for the sale, upon the mortgagor or his personal representatives, and upon the subsequent grantees and mortgagees of the premises, whose conveyance and mortgage shall be upon record at the time of the first publication of the notice, and upon all persons having a lien by or under a judgment or decree upon the mortgaged premises, subsequent to such mortgage, personally, or by leaving the same at their dwelling-house in charge of some person of suitable age, or by serving a copy of such notice upon said persons at least twenty-eight days prior to the time therein specified for the sale, by depositing the same in the post-office, properly folded, and directed to the said persons at their respective places of residence."

Mr. Michael H. Cardozo for the appellant.

Robinson must account, as trustee, for all the money which he received on the sales of the New York land, together with interest thereon, from the respective times at which they were made.

The decree of the Illinois court stated an account between the parties then before it, and charged Shillaber with the full contract price of the New York lands. This constituted a payment, and passed the equitable title to him, leaving the bare legal title in Robinson, he holding the lands in trust for the complainant. Hill, Trustees, p. 171; Bispham, Principles of Equity, sects. 95, 364.

That decree changed the *status* of each of the several parties, and from it all their rights and liabilities arise. By it, specific performance was enforced; the Illinois lands were transferred directly to Robinson, and the New York lands to Shillaber; and this, though the court had no jurisdiction over the subject-matter, provided it had jurisdiction of the person. *Massey* v. *Watts*, 6 Cranch, 148; *Northern Indiana Railroad Co.* v. *Michigan Central Railroad Co.*, 15 How. 233; *Brown* v. *Desmond*, 100 Mass. 267; *Penn* v. *Lord Baltimore*, 1 Ves. 444; Fry, Specific Performance, sect. 63; *Pennoyer* v. *Neff*, 95 U. S. 353.

A court of equity of competent jurisdiction can adjust the

equities of the parties before it, and, in accordance with a familiar principle, it regards that which is agreed to be done as already performed. Story, Eq. Jur., sect. 64; Hill, Trustees, *supra;* Francis's Maxims, 13; 1 Fonb. Eq., bk. 1, c. 6, sect. 9.

The court, in so adjusting the equities, adjudged that Robinson should not be required to convey the New York lands to Shillaber, without some security or lien thereon for the payment to him of the balance found due by the decree.

The general intention was to constitute Robinson a mortgagee, and Shillaber a mortgagor, of the lands in question; and it is a leading maxim of construction, that the intention of the parties is the controlling element. *Mitchell* v. *Tilghman*, 19 Wall. 387, 395; *Shays* v. *Norton*, 48 Ill. 100.

The terms "trust-deed" and "mortgage" are used in Illinois and other Western States, if not synonymously, at least interchangeably. *Hoffman* v. *Mackall*, 5 Ohio St. 124; *Ingle* v. *Culbertson*, 43 Iowa, 265; *McQuie* v. *Peay*, 58 Mo. 56; Adams & Durham's Real Estate Statutes and Decisions of Illinois, 202, 1702; *Pardee* v. *Lindley*, 31 Ill. 174; *Wilson* v. *McDowall*, 78 id. 514.

The distinction is, at most, a technicality. *Wilkins* v. *Wright*, 6 McLean, 340. It is laid down by more than one authority of weight that a "deed of trust in the nature of a mortgage" is, in legal effect, the same as a "mortgage." Jones, Mortgages, sects. 60, 62, 1769; Southern Law Review, N. S. vol. iii. p. 712; *Hoffman* v. *Mackall*, *supra;* *Woodruff* v. *Robb*, 19 Ohio, 212; *Coe* v. *Johnson*, 18 Ind. 218; *Coe* v. *McBrown*, 22 id. 252; *Newman* v. *Samuels*, 17 Iowa, 528; *Ingle* v. *Cuthbertson*, 43 id. 265; *Sargent* v. *Howe*, 21 Ill. 148; *Eaton* v. *Whiting*, 3 Pick. (Mass.) 484; *Lenox* v. *Reed*, 12 Kans. 223; *Turner* v. *Watkins*, 31 Ark. 429; *In re Bondholders of York & Cumberland Railway*, 50 Me. 552; *Palmer* v. *Gurnsey*, 7 Wend. (N. Y.) 248; *Lawrence* v. *Farmers' Loan & Trust Co.*, 13 N. Y. 200; *Corpman* v. *Baccastow*, Sup. Ct. of Penn. 1877, 5 N. Y. Weekly Digest, 204; Dillon, J., in 2 Am. Law Reg. N. S. 648.

In equity, any deed, although an absolute conveyance in terms, if it be devised for the purpose of securing the payment of money, is a mortgage. *Hughes* v. *Edwards*, 9 Wheat. 489;

Conway's Ex'rs v. *Alexander*, 7 Cranch, 218; *Villa* v. *Rodriguez*, 12 Wall. 323; *Flagg* v. *Mann*, 2 Sumn. 486; Coote, Law of Mortgages, p. 11; Story, Eq. Jur., sect. 1018. Doubtful instruments are so construed. *Bright* v. *Wagle*, 3 Dana (Ky.), 252; *Edrington* v. *Harper*, 3 J. J. Marsh. (Ky.) 354; *Conway's Ex'rs* v. *Alexander*, *supra*; *Holmes* v. *Grant*, 8 Paige (N. Y.), Ch. 243; *Horn* v. *Keteltas*, 46 N. Y. 605.

There are, under the laws of New York, three methods of foreclosing a mortgage. Since the judicial proceedings in Illinois demand that the "trust-deed" be construed as such an instrument, either one of these methods must be adopted for that purpose, or the equity of redemption remains. They are: by the decree of a competent court; or by the proceedings prescribed in pt. iii. c. 8, tit. 15, of the New York Revised Statutes, commonly called foreclosure by advertisement; or by lapse of time, as by the failure of the mortgagor to enforce his remedy against a mortgagee in possession for more than twenty years, by analogy to the Statute of Limitations. *Hughes* v. *Edwards*, 9 Wheat. 489; *Demarest* v. *Wynkoop*, 3 Johns. (N. Y.) Ch. 129; *Lawrence* v. *Farmers' Loan & Trust Co.*, 18 N. Y. 200.

It is not pretended by Robinson that proceedings in conformity with any of these requirements were taken to foreclose Shillaber's equity of redemption.

Noble was, by the provisions of the decree and deed, directed to give such reasonable notice as is usual or provided by law in New York. "Usual" must be regarded as identical with "provided by law."

"Or" has the same meaning as "and," when such a construction is necessary to effectuate the intention of the parties. Maxwell on the Interpretation of Statutes, 216; Potter's Dwarris on Statutes and Constructions, 286, 292; *Fowler* v. *Padget*, 7 T. R. 509; *Roome* v. *Phillips*, 24 N. Y. 463, *Arnold* v. *Buffum*, 2 Mas. 208.

Trustees are bound to comply strictly with the requirements of the instrument originating and defining their power and authority. 1 Hilliard, Mortgages, 143; Hill, Trustees, 474; *Thornton* v. *Boynton*, 81 Ill. 200; *Hull* v. *Towne*, 45 id. 493; *Griffin* v. *Marine Co.*, 52 id. 130; *Strother* v. *Law*, 54 id. 413; *Jencks* v. *Alexander*, 11 Paige (N. Y.), Ch. 619; *Tarascon*

v. *Ormsby*, 3 Litt. (Ky.) 404; *Wallis* v. *Thornton*, 2 Brock. 422; *Gray* v. *Shaw*, 14 Mo. 341; *Smith* v. *Proven*, 4 Allen (Mass.), 516; *Roche* v. *Farnsworth*, 106 Mass. 509.

Courts of equity are adverse to, and have ever been suspicious of, sales under a power in mortgages or trust-deeds, without notice to the mortgagor; and special requirements of notice in the deed itself, or the instrument originating the trust, have been enforced with the utmost rigor. *Anonymous*, 6 Madd. Ch. 10; *Gill* v. *Newton*, 12 Jur. N. S. 220; *Major* v. *Ward*, 5 Hare, 598; *Longwith* v. *Butler*, 3 Gilm. (Ill.) 32; *Tarascon* v. *Ormsby*, 3 Litt. (Ky.) 404; *Flower* v. *Elwood*, 66 Ill. 438; *Bigler* v. *Waller*, 14 Wall. 297; Jones, Mortgages, sect. 1822.

It is not necessary to make out a case of fraudulent connivance between Noble and the defendant, in order to entitle the appellant to the account which he desires. The appellee is a mortgagee in possession of the lands, and, as a trustee for the complainant, is bound to take the greatest care of the interests of the latter. When called on for an accounting, he must show that he has faithfully performed the duties of a trustee, in relation to the property. Story, Eq. Jur., sect. 1016; *Bigler* v. *Waller*, 14 Wall. 297; *Russell* v. *Southard*, 12 How. 139.

Had Robinson not sold and conveyed the property to innocent purchasers, Shillaber, on paying Robinson the amount due under the decree of the Illinois court, would have an unquestionable right to the lands.

Even if the deed made by Robinson to Noble be regarded as creating an express trust, under the New York Statutes, for the sale of land, Robinson, in the absence of an express permission by the instrument originating the alleged trust, could not, under the circumstances of this case, acquire title by such a sale, directly or indirectly. *Fulton* v. *Whitney*, 66 N. Y. 548; *Blake* v. *Buffalo Creek Railroad Co.*, 56 N. Y. 485; *Case* v. *Carroll*, 35 N. Y. 385; *Gardner* v. *Ogden*, 22 id. 327; *Colburn* v. *Morton*, 3 Keyes, 296; *Conger* v. *Ring*, 11 Barb. (N. Y.) 356; *Van Epps* v. *Van Epps*, 9 Paige (N. Y.), Ch. 237; *Davoue* v. *Fanning*, 2 Johns. (N. Y.) Ch. 252; *Bergen* v. *Bennett*, 1 Cai. (N. Y.) Cas. 11, 13, 20; *Michoud* v. *Girod*, 4 How. 508; *Ringo* v. *Binns*, 10 Pet. 269; *Lockett* v. *Hill*, 1 Wood, 552; *Dexter* v.

Shepard, 117 Mass. 480; *Dyer* v. *Shurtleff*, 112 id. 165; *Montague* v. *Dawes*, 12 Allen (Mass.), 397; s. c. 14 id. 369; *Benham* v. *Rowe*, 2 Cal. 386; *Parmenter* v. *Walker*, 9 R. I. 225; *Ex parte Bennett*, 10 Ves. 381; *Coles* v. *Trecothick*, 9 id. 234; *Ex parte Hughes*, 6 id. 617; 2 Washburn, Real Prop. 79; Sugden, Vendors and Purchasers, c. 20, sect. 2, par. 1.

This rule embraces trustees, mortgagees, and all other persons sustaining a fiduciary relation, their agents or assignees. Hill, Trustees, 159, 160; *Mapps* v. *Sharp*, 32 Ill. 18; *Waite* v. *Dennison*, 51 id. 319.

Although the courts have, in a few cases (*Coles* v. *Trecothick*, 9 Ves. 234; *Howard* v. *Davis*, 6 Tex. 174), held that sales so made were valid, it was only when a marked spirit of fairness pervaded the entire transaction, and due care was taken to preserve the rights of all interested; and so careful are they to guard safely the interest of beneficiaries, that wherever any attempt to act unfairly, to stifle competition, or in any manner to take undue advantage of the fiduciary has been made, such sales have been set aside, provided innocent third parties would not suffer thereby. *Longwith* v. *Butler*, 3 Gilm. (Va.) 32; *Griffin* v. *Marine Company*, 52 Ill. 130; *Flower* v. *Elwood*, 66 id. 436; Sugden, Vendors and Purchasers, c. 20, sect. 2, par. 1.

Mr. Philip S. Crooke and *Mr. John H. Bergen*, *contra*.

The trust-deed to Noble of the property created a valid trust, under the statutes of New York (*Corse* v. *Leggett*, 25 Barb. 389; *Sedgwick* v. *Stanton*, 20 id. 473; 2 Rev. Stat. N. Y. 355, sub. 1 & 2, vol. i., Edmund's ed. p. 677), which allow an express trust, 1, to sell lands for the benefit of creditors; and, 2, to sell, mortgage, or lease lands, for the benefit of legatees, or for the purpose of satisfying any charge thereon.

Robinson was a creditor of Shillaber under the decree of the Illinois court; and the amount due was made a charge and lien on the property, which was sold by Noble to John A. Robinson for the appellee, and not to the appellee; although the latter, not occupying any fiduciary relation either to Noble or Shillaber, had a perfect right to purchase. The authorities cited by the appellant in support of his position, that the appellee could not acquire a title at Noble's sale, are all instances

where a trustee was the purchaser of the trust property, and have, therefore, no bearing upon this case.

Reference to the statutes of Illinois is not necessary, although this was a valid trust in that State (Stats. of Illinois, Cross, 3d ed., 1869, vol. i. p. 84, sect. 3); for it is a well-settled principle that the law of the State where the land lies determines the construction of instruments affecting it. As the trust-deed covered lands in New York, and was by its terms to be there performed, the law of that State must govern it. *Smith* v. *Smith*, 2 Johns. (N. Y.) 235; *Thompson* v. *Ketcham*, 4 id. 285; *Hyde* v. *Goodnow*, 3 N. Y. 266; *Bowen* v. *Newell*, 13 id. 290; 10 id. 486; 33 id. 615. It vested the fee of the land in the trustee, subject to the trust (*Noyes* v. *Blakeman*, 6 N. Y. 578); and where the trust was executed by his sale of the land, either with or without notice, a valid and unincumbered title passed to the purchaser. *Belmont* v. *O'Brien*, 12 N. Y. 405.

MR. JUSTICE MILLER, after stating the case, delivered the opinion of the court.

The principal, in fact the only, defence which merits any consideration in this case, is that by the trust-deed which Robinson made to Noble under the decree of the court, and by the sale which Noble made in conformity to the terms of the decree, and of that deed, Shillaber's rights were completely divested in the land; and since it did not bring, at that sale, as much money as was due to Robinson, which, by the terms of both the decree and the deed of trust, was to be paid to him out of the proceeds of that sale, nothing was left for Shillaber in the matter.

The decree in the Illinois suit, in which Theodore Shillaber had appeared after his father's death, is binding and conclusive on both parties. The deed of trust made by Robinson to Noble is in accordance with the decree, and conferred an authority on him to sell the land. The purpose of this sale, as expressed in the deed of trust and the decree, was to pay to Robinson the $4,249.58, which was a first lien on the land, and the balance into the court, for the use of Shillaber.

Much discussion has been had in the case as to the nature of the conveyance to Noble, one party insisting that it is a simple

mortgage with power of sale, and the other that it is, under the statutes of New York, the creation of a valid trust in lands. The point of this discussion is found in the question, whether the sale by Noble, under that instrument, was valid or was void. The counsel of defendant insists that Noble became vested with a perfect title to the land by the deed of Robinson, and that his sale and conveyance are valid whether he pursued the direction of the deed in regard to advertising or not; and that, if any such advertising were necessary, there was no usual notice, nor any provided by law, for such sales in the State of New York.

It is shown by the evidence that Noble did publish a notice that the three pieces of land in the three different counties would be sold on a day mentioned, at Montague Hall, in the city of Brooklyn. This notice was published, for six weeks preceding the day appointed for the sale, in the "Brooklyn Standard," a weekly paper printed in Kings County. But the statutes of New York, then in force, prescribed publication of such notice for twelve weeks successively before the sale.

If the instrument under which Noble acted is a mortgage with power of sale, it is beyond dispute that the sale is void, because it was not made in conformity with the terms on which alone he was authorized to sell. That the sale, under such circumstances, is void, is too well established to admit of controversy. We refer specially to the recent case in this court of *Bigler* v. *Waller*, 14 Wall. 302. The list of authorities cited by the appellant are to the same effect.

Without entering into the argument of the question whether the instrument under which Noble acted is in all respects a mortgage, the case of *Lawrence* v. *The Farmers' Loan & Trust Co.* (13 N. Y. 200), shows that it is an instrument which, for the purposes of the sale under the power which it contains, comes under the provisions of the statute we have cited as regards publication of notice. It also decides that a sale made without such notice is void. It is the well-settled doctrine of courts of equity, that a conveyance of land, for the purpose of securing payment of a sum of money, is a mortgage, if it leaves a right to redeem upon payment of the debt. If there is no power of sale, the equity of redemption remains until it is foreclosed by

a suit in chancery, or by some other mode recognized by law. If there is a power of sale, whether in the creditor or in some third person to whom the conveyance is made for that purpose, it is still in effect a mortgage, though in form a deed of trust, and may be foreclosed by sale in pursuance of the terms in which the power is conferred, or by suit in chancery. These instruments generally give specific directions regarding the notice to be given, and of the time, place, and terms of the sale. In some States, the statute prescribes the manner of giving this notice, and in such case it must be complied with. In either case, the validity of the sale being wholly dependent on the power conferred by the instrument, a strict compliance with its terms is essential.

If this is not a mortgage to which the notice of the New York statute is applicable, we do not see that the defendant's position is improved by that circumstance; for there is, then, no provision for a sale or foreclosure of the equity of Shillaber, but by a decree of an equity court. This has never been had, and it still remains that there has been no valid execution of the trust reposed in Noble by the deed. If the matter had remained in this condition, Shillaber would, on payment to Robinson of the $4,249.58, with interest, have had a right, enforceable in this suit, to have a conveyance of the New York land by Noble to him. But neither the conveyance by Robinson, which remained an escrow, nor that to Noble, was ever placed on record; and Robinson, in whom, according to the records of the proper counties in New York, the title still remained, sold all these lands to persons who, as innocent purchasers for a valuable consideration, now hold them by a good title. This title is equally beyond the reach of Robinson, of Shillaber, and of the court. Indeed, although Robinson alleges in his answer that the purchase of John A. Robinson was made for his benefit, he seems to have attached no importance to it; for he does not aver that John A. Robinson ever conveyed to him, nor does he, while giving copies of all the deeds on which he relies, including the deed to John A. Robinson, show any evidence of a conveyance from John A. Robinson to him.

The defendant, therefore, when he sold and conveyed this land to the parties who now hold it under him, did it in viola-

tion of the rights of Shillaber, as settled by the Illinois decree. By that decree, Robinson had no right to sell. By the conveyance made to Noble under that decree, he had nothing left in the New York lands but a lien for his $4,249.58. The sale by Noble was void, and conferred no rights on Robinson whatever. His belief in its validity did not change the matter. By availing himself of the title which was in him originally, and which appeared by the records to be there yet, he sold the lands for twice as much as his lien, and received the money. That he must account to Shillaber in some way is too plain for argument. If Shillaber could, by paying his debt to Robinson, redeem the lands from their present holders, it is the relief which he would prefer, and to which as against Robinson he would be entitled. But Robinson has put this out of his power, by a wrongful sale and conveyance to innocent purchasers.

There is no evidence to show that the lands are now worth any more than Robinson sold them for; no evidence that they were worth more when he sold them. His answer gives the precise sum received by him for each parcel of land, and the date when he received it. He probably believed the land was his own when he sold it; but, as we have seen, he must be considered as holding such title as he had in trust, first for his own debt due from Shillaber, and the remainder for the use of Shillaber. Treating him, then, as trustee, he must account for the money received for the lands, according to the trusts on which he held them. The decree of the Circuit Court dismissing Shillaber's bill must be reversed, and the case remanded to that court, with instructions to render a decree on the basis of charging Robinson with the sums received by him for the lands, and interest thereon until the day of the decree, deducting therefrom the sum found due him from Shillaber by the Illinois decree, with interest to the same time, and rendering a decree for the difference in favor of Shillaber against Robinson, with costs; and it is

So ordered.

GRANT v. NATIONAL BANK.

In order to invalidate, as a fraudulent preference within the meaning of the Bankrupt Act, a security taken for a debt, the creditor must have had such a knowledge of facts as to induce a reasonable belief of his debtor's insolvency. It is not sufficient that he had some cause to suspect such insolvency.

APPEAL from the Circuit Court of the United States for the Northern District of Illinois.

This case arises upon a bill in equity, filed by Charles E. Grant, assignee in bankruptcy of John S. Miller, to set aside a mortgage, or deed of trust, executed by him about two months prior to his bankruptcy. Miller was indebted to the First National Bank of Monmouth, Illinois, in about $6,200, of which $4,000 consisted of a note which had been twice renewed, and the balance was the amount which he had overdrawn his account in the bank. Wanting some cash for immediate purposes, the bank advanced him $300 more, on his giving them the deed of trust in question, which was made for $6,500, and was given to secure the indebtedness referred to. The question below was, whether, at the time of taking this security, the officers of the bank had reasonable cause to believe that Miller was insolvent. The Circuit Court came to the conclusion that they had not, and dismissed the bill. From that decree the assignee appealed.

Mr. Thomas G. Frost and *Mr. H. G. Miller* for the appellant.

Where a creditor, who accepts a conveyance to secure a precedent debt, has reason to believe that his debtor is at the time unable to pay his debts as they become due, the conveyance is void as a fraudulent preference within the meaning of the Bankrupt Act. *Toof et al.* v. *Martin, Assignee, &c.*, 13 Wall. 40; *Buchanan* v. *Smith*, 16 id. 308; *Wilson* v. *City Bank*, 17 id. 487; *Dutcher* v. *Wright*, 94 U. S. 553; *Forbes* v. *Howe*, 102 Mass. 437.

Mr. C. B. Lawrence, contra.

If Miller was in fact insolvent when he executed the deed of trust, the officers of the bank had no knowledge of the fact, nor any reasonable cause for believing it.

The deed of trust was given to secure $6,500, of which only

the sum of $4,000 was a precedent debt, the remaining $2,500 being for money advanced under the provision of the deed. Even if it could be held that the deed was constructively fraudulent as to the $4,000, it must be sustained as to the $2,500.

MR. JUSTICE BRADLEY, after stating the case, delivered the opinion of the court.

Some confusion exists in the cases as to the meaning of the phrase, "having reasonable cause to believe such a person is insolvent." *Dicta* are not wanting which assume that it has the same meaning as if it had read, "having reasonable cause to suspect such a person is insolvent." But the two phrases are distinct in meaning and effect. It is not enough that a creditor has some cause to suspect the insolvency of his debtor; but he must have such a knowledge of facts as to induce a reasonable belief of his debtor's insolvency, in order to invalidate a security taken for his debt. To make mere suspicion a ground of nullity in such a case would render the business transactions of the community altogether too insecure. It was never the intention of the framers of the act to establish any such rule. A man may have many grounds of suspicion that his debtor is in failing circumstances, and yet have no cause for a well-grounded belief of the fact. He may be unwilling to trust him further; he may feel anxious about his claim, and have a strong desire to secure it, — and yet such belief as the act requires may be wanting. Obtaining additional security, or receiving payment of a debt, under such circumstances is not prohibited by the law. Receiving payment is put in the same category, in the section referred to, as receiving security. Hundreds of men constantly continue to make payments up to the very eve of their failure, which it would be very unjust and disastrous to set aside. And yet this could be done in a large proportion of cases if mere grounds of suspicion of their solvency were sufficient for the purpose.

The debtor is often buoyed up by the hope of being able to get through with his difficulties long after his case is in fact desperate; and his creditors, if they know any thing of his embarrassments, either participate in the same feeling, or at least are willing to think that there is a possibility of his suc-

ceeding. To overhaul and set aside all his transactions with his creditors, made under such circumstances, because there may exist some grounds of suspicion of his inability to carry himself through, would make the bankrupt law an engine of oppression and injustice. It would, in fact, have the effect of producing bankruptcy in many cases where it might otherwise be avoided.

Hence the act, very wisely, as we think, instead of making a payment or a security void for a mere suspicion of the debtor's insolvency, requires, for that purpose, that his creditor should have some reasonable cause to believe him insolvent. He must have a knowledge of some fact or facts calculated to produce such a belief in the mind of an ordinarily intelligent man.

It is on this distinction that the present case turns. It cannot be denied that the officers of the bank had become distrustful of Miller's ability to bring his affairs to a successful termination; and yet it is equally apparent, independent of their sworn statements on the subject, that they supposed there was a possibility of his doing so. After obtaining the security in question, they still allowed him to check upon them for considerable amounts in advance of his deposits. They were alarmed; but they were not without hope. They felt it necessary to exact security for what he owed them; but they still granted him temporary accommodations. Had they actually supposed him to be insolvent, would they have done this?

The circumstances calculated to excite their suspicions are very ably and ingeniously summed up in the brief of the appellant's counsel; but we see nothing adduced therein which is sufficient to establish any thing more than cause for suspicion. That Miller borrowed money; that he had to renew his note; that he overdrew his account; that he was addicted to some incorrect habits; that he was somewhat reckless in his manner of doing business; that he seemed to be pressed for money,—were all facts well enough calculated to make the officers of the bank cautious and distrustful; but it is not shown that any facts had come to their knowledge which were sufficient to lay any other ground than that of mere suspicion. Miller had for years been largely engaged in purchasing, fattening, and selling cattle. He had always borrowed money largely to enable him

to make his purchases; for this purpose he had long been in the habit of temporarily overdrawing his account: the note which he renewed was not a regular business note, given in ordinary course, but was made to effect a loan from the bank apparently of a more permanent character than an ordinary discount; and his manner of doing business was the same as it had always been. That he was actually insolvent when the trust-deed was executed, there is little doubt; but he was largely indebted in Galesburg, in a different county from that in which Monmouth is situated; and there is no evidence that the officers of the bank had any knowledge of this indebtedness.

Without going into the evidence in detail, it seems to us that it only establishes the fact that the officers of the bank had reason to be suspicious of the bankrupt's insolvency, when their security was obtained; but that it falls short of establishing that they had reasonable cause to believe that he was insolvent.

Decree affirmed.

COUNTY OF BATES v. WINTERS.

On April 5, 1870, the county court of Bates County, Missouri, having received the requisite petition, ordered that an election be held May 8 in Mount Pleasant township, for the purpose of determining whether a subscription of $90,000 should be made on behalf of the township to the capital stock of the Lexington, Chillicothe, and Gulf Railroad Company, to be paid for in the bonds of the county, upon certain conditions and qualifications set forth in the order. The election resulted in favor of the subscription; whereupon the court, June 14, 1870, made an order that said sum "be, and is hereby, subscribed . . . subject to and in pursuance of all the terms, restrictions, and limitations" of the order of April 5, and that the agent of the court be authorized and directed to make said subscription, on behalf of the township, on the stock-books of said company, and, in making it, to have copied in full the order of the court as the conditions on which it was made, and that he report his acts to the court. The agent, Dec. 19, 1870, reported that the company had no stock-books, for which, and other reasons, he did not make the subscription, concluding his report with the words, "the bonds of said township are, therefore, not subscribed," which report was formally adopted by the court. Jan. 18, 1871, the county court made another order, reciting that the subscription had been made to said Lexington, Chillicothe, and Gulf Railroad Company; that a consolidation had been made between that and another company, resulting in the Lexington, Lake, and Gulf Railroad Company, and directing that

$90,000 of bonds be issued to the latter company in payment and satisfaction of said original subscription. The order concluded by authorizing the agent of the court "to subscribe said stock" to said Lexington, Lake, and Gulf Railroad Company. The agent made the subscription on the books of that company, which was accepted by it, and a certificate of stock issued to the county. The bonds recite on their face that they are issued to the Lexington, Lake, and Gulf Railroad Company, in payment of the subscription to the Lexington, Chillicothe, and Gulf Railroad Company, authorized by the vote of the people held May 8, 1870, and that the two companies were consolidated, as required by law. *Held*, 1. That the action of the county court on June 14, 1870, was not final and self-executing, and did not constitute a subscription to the Lexington, Chillicothe, and Gulf Railroad Company. 2. That the issue of the bonds to the Lexington, Lake, and Gulf Railroad Company was not authorized by the election held May 8, 1870. 3. That there can be no recovery on said bonds, as their invalidity is shown by their recitals.

ERROR to the Circuit Court of the United States for the Western District of Missouri.

The county of Bates, in the State of Missouri, brought this writ of error to reverse a judgment rendered against it in favor of Jonathan Winters and Valentine Winters, for the sum of $6,251.14, the amount of certain bonds and coupons issued by said county in behalf of Mount Pleasant township. The bonds were a part of a series amounting to $90,000, purporting to be issued upon an election authorizing a subscription to the capital stock of the Lexington, Chillicothe, and Gulf Railroad Company. They, and the coupons attached to them, are in the following form: —

"No. 56.] UNITED STATES OF AMERICA. [$1,000.

"*State of Missouri, County of Bates.*

"Issued pursuant to articles of consolidation in payment of stock due the Lexington, Lake, and Gulf Railroad Company, consolidated Oct. 4, A.D. 1870.

"Know all men by these presents, that the county of Bates, in the State of Missouri, acknowledges itself indebted and firmly bound to the Lexington, Lake, and Gulf Railroad Company, in the sum of $1,000, which sum the said county of Bates, for and in behalf of Mount Pleasant township therein, promises to pay the said Lexington, Lake, and Gulf Railroad Company, or bearer, at the Bank of America, in the city and State of New York, on the eighteenth day of January, A.D. 1886, together with interest thereon, from the eighteenth day of January, A.D. 1871, at the rate of ten per cent

per annum, which interest shall be payable annually on the presentation and delivery at said Bank of America of the coupons hereto attached.

"This bond being issued under and pursuant to an order of the county court of Bates County, by virtue of an act of the General Assembly of the State of Missouri, approved March 23, 1868, entitled 'An Act to facilitate the construction of railroads in the State of Missouri,' and authorized by a vote of the people, taken May 3, 1870, as required by law, upon the proposition to subscribe $90,000 to the capital stock of the Lexington, Chillicothe, and Gulf Railroad Company, and which said railroad company last aforesaid and the former, Pleasant Hill Division of the Lexington, Chillicothe, and Gulf Railroad Company, were, on the fourth day of October, 1870, consolidated, as required by law, into one company, under the name of the Lexington, Lake, and Gulf Railroad Company; and which said last-named railroad company, as provided by law and under the terms of said consolidation thereof, possesses all the powers, rights, and privileges, and owns and controls all the assets, subscription bonds, moneys, and properties whatever, of the two said several companies forming said consolidation, or either one of them.

"In testimony whereof, the said county of Bates has executed this bond by the presiding justice of the county court of said county under the order thereof, signing his name hereto, and by the clerk of said court under the order thereof, attesting the same and affixing the seal of said court.

"This done at the city of Butler, county of Bates, this eighteenth day of January, A.D. 1871.

{ COUNTY COURT, BATES COUNTY, MO., SEAL. }

"B. H. THORNTON,
"*Presiding Justice of the County Court of Bates County, Mo.*

"Attest:

"W. J. SMITH,
"*Clerk of the County Court of Bates County, Mo.*"

"$100.] BUTLER, BATES COUNTY, Mo. [$100.

"Jan. 18, A.D. 1871.

"The county of Bates acknowledges to owe the sum of $100, payable to bearer, on the eighteenth day of January, 1872, at the Bank of America, in the city and State of New York, for one year's interest on bond No. 56.

"W. J. SMITH,
"*Clerk of the County Court, Bates County, Mo.*"

The Constitution of Missouri, sect. 14, art. 11, prescribes, —

"The General Assembly shall not authorize any county, city, or town to become a stockholder in, or to loan its credit to, any company, association, or corporation, unless two-thirds of the qualified voters of such county, city, or town, at a regular or special election to be held therein, shall assent thereto."

The statute of that State of March 23, 1868, enacted, that whenever twenty-five persons, tax-payers and residents of a municipal township, should set forth their desire to subscribe to the capital stock of a railroad company proposing to build a road into or near said town, it should be the duty of the county court to order an election, to determine if such subscription should be made; and, if it should appear that two-thirds of the qualified voters voting at such election were in favor of such subscription, it should be the duty of the county court to make such subscription in behalf of the township according to the terms and conditions thereof, and . . . to issue bonds in the name of the county. Wagner, Stat. p. 313, sect. 551; Laws Mo., 1868, p. 92.

The authority on the part of Bates County to issue its bonds to the Lexington, Lake, and Gulf Railroad Company is based upon the following proceedings: —

On the fifth day of April, 1870, the county court of Bates County, having received such a petition, ordered an election, at which the electors of Mount Pleasant township should determine whether they would subscribe $90,000 to the Lexington, Chillicothe, and Gulf Railroad Company, to be paid in bonds, upon the terms and with the numerous conditions and qualifications in the said order particularly set forth.

The election resulted in favor of making the subscription; and on the 14th of June, 1870, the county court made an order "that the sum of $90,000 be, and is hereby, subscribed to the capital stock of the Lexington, Chillicothe, and Gulf Railroad Company, in the name and behalf of Mount Pleasant township, subject to and in pursuance of all the terms, restrictions, and limitations . . . of the order of the court" so made as aforesaid; and that the agent be authorized to make such subscription on the books of the company; and in making it he be

directed to have copied in full the order of the court, as the conditions on which the subscription is made; and that he report his acts to the court.

One of these conditions was, that from the proceeds of the sale of said bonds there should be paid to said company, monthly, ninety per cent of the monthly estimate of the work done on said road in Mount Pleasant township; and it authorized said bonds to be issued when all of the said road south of Lexington to the north line of Mount Pleasant township should have been located and put under contract.

The agent went to Lexington for the purpose of making the subscription, and carried with him a copy of the records of the county court, as he says, "for the purpose of showing his authority to act in the premises;" but the company had no books, by reason whereof he did not make the subscription; he sought to withdraw or reclaim his papers, but the company refused to allow him to do so. He went again for the same purpose, but, being dissatisfied with the condition of the company, did not make the subscription; and on the nineteenth day of December, 1870, reported his doings to the county court, ending in the words, "the bonds of said township are, therefore, not subscribed." This report was formally approved by the county court.

Seven months after making the order above set forth, and on the 18th of January, 1871, the county court made another order, which recited that the subscription had been made to said Chillicothe Company, that a consolidation had been made between that and another company, resulting in the Lexington, Lake, and Gulf Railroad Company; and it directed that $90,000 of bonds be issued to the latter company, in payment and satisfaction of the original subscription as aforesaid; and concluded: "Said James M. Boreing (their agent to receive and dispose of the bonds) is hereby authorized to subscribe said stock to said railroad company," the Lexington, Lake, and Gulf Railroad Company.

Boreing did make the subscription on the books of the new company, which was accepted by that company; and then, for the first time, a certificate of stock was issued to the county.

The court below found that the defendants in error were

bona fide holders, for value, of the bonds and coupons in suit, before maturity, without notice of any defect in the issue of the bonds, except such as they were bound in law to take notice of, and such as the face of the bonds imparted to them.

Mr. Thomas C. Reynolds and *Messrs. Glover & Shipley* for the plaintiff in error.

The subscription of $90,000 to the capital stock of the Lexington, Chillicothe, and Gulf Railroad Company, authorized by the election held May 3, 1870, was never made.

The pretended subscription to the stock of another company, which was not in existence at the time of holding the election, and the bonds issued in payment of such subscription, are void, inasmuch as the county court, as the mere agent of the township, had no power in the premises beyond that conferred by said vote. *Harshman* v. *Bates County*, 92 U. S. 569; *County of Scotland* v. *Thomas*, 94 id. 682.

The recitals in the bonds are sufficient notice of every material fact which affects their validity.

Mr. T. K. Skinker, contra.

The transfer of the original subscription, and the issue of the bonds to the Lexington, Lake, and Gulf Railroad Company, were lawful. The order of the county court, of June 14, 1870, subscribing, in pursuance of the popular vote cast on the third day of the preceding month, $90,000 to the Lexington, Chillicothe, and Gulf Company, is itself obligatory, without a formal acceptance by the company, or an actual subscription on its books. *Justices of Clarke County* v. *Paris, &c. Turnpike Co.*, 11 B. Mon. (Ky.) 143. The county court properly regarded that order as equivalent to a subscription, and as legally binding. Its subsequent orders direct the bonds to be issued "in payment of said original subscription." That the subscription was accepted by the company is manifest from their refusal to permit the agent of the county to withdraw the copies of the orders of the county court, which he had brought with him to transcribe on the stock-book of the company. The subscription could be lawfully transferred to the consolidated company, and the issue of bonds to the latter was lawful. *Nugent* v. *The Supervisors*, 19 Wall. 241.

MR. JUSTICE HUNT delivered the opinion of the court.

If we hold that there was no valid subscription until that made on the 18th of January, 1871, which was to the Lexington, Lake, and Gulf Road Company, it is open to the objection that the township voted an authority to subscribe to the stock of one company, and the county court subscribed to the stock of a different company. This was condemned in *Harshman* v. *Bates County* (92 U. S. 569), which arose upon the same issue of bonds and in relation to the same roads as the case before us. That case has since been modified as to the first point decided in it, in relation to the number of votes required to authorize the subscription, but remains unimpaired as to the point we are considering.

It is said that the subscription was, in law, made on the 14th of June, 1870, to the Lexington, Chillicothe, and Gulf Railroad Company; and that, having been made by the authority of the popular vote, it could be transferred to the consolidated organization. *Nugent* v. *The Supervisors* (19 Wall. 241) is cited to sustain this proposition.

It is decided, in that case, that an actual, manual subscription on the books of a company is not indispensable; that where an order was made by a county court, which said that it subscribed for a specified number of shares of railroad stock, which was accepted by the company, and notice of such acceptance given to the county court, when the minds of the parties met, and both understood that a contract had been made, and where the county court had accepted the position of a stockholder, received certificates for the stock subscribed, and voted as a stockholder, that these facts constituted a valid subscription.

In *County of Moultrie* v. *Savings Bank* (92 U. S. 631) a like decision was had, and upon like facts. In declaring the resolution of the corporation to have been an executed subscription, the court use this language: "The authorized body of a municipal corporation may bind it by an ordinance, which, in favor of private persons interested therein, may, if so intended, operate as a contract; or they may bind it by a resolution, or by vote clothe its officers with power to act for it. The former was the clear intention in this case. The board clothed no

officer with power to act for it. The resolution to subscribe was its own act, its immediate subscription."

A similar case is that of *Justices of Clarke County* v. *Paris, &c.* (11 B. Mon. (Ky.) 143), where the order was entered in these words (in part): "With the concurrence of all the magistrates of the county, ordered, that the county court of Clarke County subscribe, as they hereby do, for fifty shares of stock in the Paris" Company, &c. The court say (at p. 146): "It is manifest on the face of the order that it was made as a subscription. The suspending order of October calls it a subscription, and the evidence shows that it was so intended and understood when made, both by the court which made it and by the company which solicited and accepted it."

The present case is quite a different one. The order of the county court was not intended, as in the cases referred to, to be final and self-executing. While it recited that the sum named should be, and was thereby, subscribed, it "authorized and directed" the agent "to make said subscription on the stock-books of the said company," upon the conditions specified, and to report to the court thereon.

Having failed, for the reasons given by him, to make the subscription, the agent reported to the county court his doings, and "that the bonds of the township are not, therefore, subscribed;" and the county court approved his report.

A subscription to the amount of $90,000 was made in January, 1871, by color of said authority, on the books of the Lexington, Lake, and Gulf Railroad Company. This subscription was accepted by that company, and a certificate of stock to the amount of such subscription was then, for the first time, issued to the county.

The company whose stock was thus received has graded in part the road, but never completed it. The county of Bates or the town of Mount Pleasant has never, in fact, received any benefit from this issue of its bonds.

The county court did not intend their action in June, 1870, to be final, and did not understand that a subscription was thereby completed. Their vote was a declaration that the power to subscribe should be exercised, and was an authority to their agent to perfect a contract with the railroad company,

on the conditions set forth. No acceptance was made by the railroad company, no notice of acceptance was given, nor was there any act or fact which afforded a pretext for saying that the railroad company was bound by the contract of subscription. While it refused to allow the agent to withdraw his evidence of authority, it said nothing and did nothing to indicate that the minds of the parties had met upon the terms of a subscription. The county court was precise and particular in requiring those conditions to be copied in full on the books of the company, as the conditions on which the subscription was made; and there could be no mutual contract until the railroad company assented, on its part, to those conditions.

At a subsequent time, Jan. 18, 1871, when it had determined to issue bonds to a different company, and apparently as its justification for so doing, the county court recited that a subscription had been made to the Chillicothe road. It at once, and in the same order, contradicted and repudiated this recital, by directing a subscription for $90,000 of bonds in the Lexington and Lake Railroad Company. If the subscription had been made before to one company, there was no occasion or authority for a subscription to another. This historical statement furnishes no satisfactory evidence of an actual or legal subscription in June, 1870.

We are of the opinion that the action of the county court on the 14th of June, 1870, did not constitute a subscription to the stock of the Lexington, Chillicothe, and Lake Railroad Company, and that the case of the defendants in error is fatally defective, under the ruling of *Harshman* v. *Bates County*, in this: that the popular vote gave authority to subscribe to the Lexington, Chillicothe, and Gulf Railroad Company, while the subscription was made and the bonds issued to a different company, to wit, to the Lexington, Lake, and Gulf Railroad Company.

The same decision holds that the recitals in the bonds are such that there can be no *bona fide* holders of them; and to the like effect in principle is *McClure* v. *Township of Oxford*, 94 U. S. 429.

The judgment must be reversed, and the case remanded to the Circuit Court, with directions to proceed to a new trial, according to the views above expressed; and it is

So ordered.

MR. JUSTICE CLIFFORD, with whom concurred MR. JUSTICE SWAYNE and MR. JUSTICE STRONG, dissenting.

I dissent from the opinion in this case, upon the ground that it is in conflict with prior decisions of this court upon the same subject.

ELDRIDGE v. HILL.

Forty-four record-books, some deeds, mortgages, and other papers of a county having been stolen, the county officers deposited $3,500 in the hands of A., upon condition that it should, upon the return of the stolen property, be paid to the person causing the return. It was also stipulated that the failure to "deliver some small paper or papers" should not invalidate the agreement. Within the time limited, A. received a paper, signed by the deputy-sheriff of the county, acknowledging the receipt of the record-books, "also papers and small index-books." He thereupon paid the money to the person presenting the receipt. The county then brought suit against A. to recover the money, alleging that some of the books were, upon their return, in such a damaged condition as to be rendered comparatively worthless, and that he had, therefore, not performed his contract. *Held*, that A., being a simple bailee of the money deposited in his hands, without compensation, was not, in the absence of bad faith on his part, responsible for the condition of the property at the time of its return.

ERROR to the Circuit Court of the United States for the Western District of Michigan.

The facts are stated in the opinion of the court.

Mr. Matt. H. Carpenter for the plaintiffs in error.

Mr. E. W. Keightley, contra.

MR. JUSTICE MILLER delivered the opinion of the court.

The bill of exceptions in this case shows that forty-four record-books, and some deeds, mortgages, and other papers, were, on the night of the 28th of June, 1872, stolen from the office of the register of deeds of the county of St. Joseph, Mich.

After an unavailing effort for over two months to recover them, the officers of the county seem to have come to an understanding with some detectives, by which they were to deposit in Chicago, with the law firm of Eldridge & Tourtelotte, now plaintiffs in error, the sum of $3,500, to be paid to the person

causing said books and papers to be delivered to the county, if it was done before the twelfth day of September.

The money was so deposited on the fifth day of September, with Eldridge & Tourtelotte, and a written instrument signed by them and by the proper officers of the county, which, after reciting the circumstances that led to it, ends with the following agreement: —

"It is hereby agreed that the said supervisors and the treasurer shall deposit in the hands of Messrs. Eldridge & Tourtelotte the said sum of money (which sum is hereby deposited with said Eldridge & Tourtelotte), and which said sum shall be held by them until the said books and papers shall be returned to said county; and when so delivered to said county, the said sum of money so deposited in said Eldridge & Tourtelotte's hands shall be paid and delivered to said parties so causing said books and papers to be so returned to said county; and in case the said books and papers, and all of them, are not delivered to said county on or before the twelfth day of September, A.D. 1872, then the said sum of money so received by said Eldridge & Tourtelotte shall be returned to and given back to said treasurer of said county.

"CHICAGO, Sept. 5, A.D. 1872.

(Signed) "WM. M. WATKINS,
"Comm. of Board of Supervisors for the County of St. Joseph.
"JAMES HILL, *County Treasurer.*
"E. F. PEIRCE, *County Sheriff.*
"ELDRIDGE & TOURTELOTTE.

"It is understood that any failure to deliver some small paper or papers shall not invalidate the above agreement.

"WM. M. WATKINS."

It is further shown that, on the appearance of Tourtelotte at his office at the usual hour on the morning of September 7, a man named Wilson, known to him as a detective, was there awaiting him, and presented him the following paper: —

"I have received from somebody forty-four books for St. Joseph County, also papers and small index-books. W. W. HATCH."

Hatch was the deputy-sheriff of the county, and on the production of this paper Tourtelotte paid the money to Wilson.

Hill, on behalf of the county, brought this action against

Eldridge & Tourtelotte, for the money so paid, and recovered judgment.

One of the errors assigned is, that the court admitted the instrument signed by the parties, dated September 5, to be read in evidence, when the copy set out in the declaration is dated September 6. It is unnecessary to consider this question, as we are of opinion that the judgment must be reversed, and a new trial awarded on another and more important ground.

We are of opinion that there was no evidence of the liability of the defendants on which a verdict could have been rendered against them; and, though no instruction to that effect was prayed, the court did charge the jury that the evidence raised the question which it was proper for them, and not for the court, to decide, whether, on the delivery of the books and papers to the county officers, they were in such a condition as justified the defendants in paying the money to the party claiming it. To this defendants excepted.

On this point we think that the court did not give sufficient weight to the fact that defendants were simple bailees and agents acting for the county without compensation. Although in the course of this charge the court calls them bailees and agents, it lays down a rule which would govern the case if the defendants had made a contract for a valuable consideration to restore the books and papers in good order to the county inside of seven days, or to return the money.

The bill of exceptions states as facts proved that "all of the property except one deed and two powers of attorney, and the whole of the books which had been stolen from the office of the register of deeds, viz. forty-four books of records, were returned to the custody of the register." That a leaf was missing from one book, and three from another. That some of the writing had been rendered illegible, and parts of the pages gone. This is the substance of the testimony, on which the judge put it to the jury as a question for them to decide, whether Eldridge & Tourtelotte should refund to the county the money which, as its gratuitous agents, they had paid to recover the books.

We think there was no such question; that in the absence of

any pretence of bad faith there was no right of recovery. It is clear that the defendants were not required by the circumstances of the case to see and examine the books, or to await their delivery to the register, and his examination and report on their condition. Any such idea is inconsistent with the whole arrangement; and the county officers who consented to such an arrangement should be the last to insist on a condition which would enable them to get the books, catch the thief, and retain the reward.

If Eldridge & Tourtelotte acted in good faith, as it is clear they did, and without reward did what they had every reason to believe was in accord with the wishes of those who deposited the money, they are discharged. The thing to be done was the recovery of forty-four large record-books of one of the oldest counties of the State. It was an important thing to the owners of property in the county that it should be done. When this had been done and the books recovered, with all the loose papers but two or three, it is idle to say that the absence of two or three pages, and the fading of the ink of as many more, justified the county in holding the books and suing its own agent for the money which, under its instruction, he had paid to get them back. It seems to us that if those books had been presented to Tourtelotte just as they were to the deputy-sheriff, and he had refused to pay the $3,500, and the books had thereby been for ever lost, the county would have had a much stronger cause of action than it has proved in this case.

Because there was no evidence on which plaintiff had a right to recover, and because the court, against the exception of defendants, told the jury there was evidence on that point for them to consider, the judgment must be reversed and the cause remanded, with instructions to set aside the verdict and grant a new trial; and it is

So ordered.

The Constitution of Missouri, sect. 14, art. 11, prescribes, —

"The General Assembly shall not authorize any county, city, or town to become a stockholder in, or to loan its credit to, any company, association, or corporation, unless two-thirds of the qualified voters of such county, city, or town, at a regular or special election to be held therein, shall assent thereto."

The statute of that State of March 23, 1868, enacted, that whenever twenty-five persons, tax-payers and residents of a municipal township, should set forth their desire to subscribe to the capital stock of a railroad company proposing to build a road into or near said town, it should be the duty of the county court to order an election, to determine if such subscription should be made; and, if it should appear that two-thirds of the qualified voters voting at such election were in favor of such subscription, it should be the duty of the county court to make such subscription in behalf of the township according to the terms and conditions thereof, and . . . to issue bonds in the name of the county. Wagner, Stat. p. 313, sect. 551; Laws Mo., 1868, p. 92.

The authority on the part of Bates County to issue its bonds to the Lexington, Lake, and Gulf Railroad Company is based upon the following proceedings: —

On the fifth day of April, 1870, the county court of Bates County, having received such a petition, ordered an election, at which the electors of Mount Pleasant township should determine whether they would subscribe $90,000 to the Lexington, Chillicothe, and Gulf Railroad Company, to be paid in bonds, upon the terms and with the numerous conditions and qualifications in the said order particularly set forth.

The election resulted in favor of making the subscription; and on the 14th of June, 1870, the county court made an order "that the sum of $90,000 be, and is hereby, subscribed to the capital stock of the Lexington, Chillicothe, and Gulf Railroad Company, in the name and behalf of Mount Pleasant township, subject to and in pursuance of all the terms, restrictions, and limitations . . . of the order of the court" so made as aforesaid; and that the agent be authorized to make such subscription on the books of the company; and in making it he be

directed to have copied in full the order of the court, as the conditions on which the subscription is made; and that he report his acts to the court.

One of these conditions was, that from the proceeds of the sale of said bonds there should be paid to said company, monthly, ninety per cent of the monthly estimate of the work done on said road in Mount Pleasant township; and it authorized said bonds to be issued when all of the said road south of Lexington to the north line of Mount Pleasant township should have been located and put under contract.

The agent went to Lexington for the purpose of making the subscription, and carried with him a copy of the records of the county court, as he says, "for the purpose of showing his authority to act in the premises;" but the company had no books, by reason whereof he did not make the subscription; he sought to withdraw or reclaim his papers, but the company refused to allow him to do so. He went again for the same purpose, but, being dissatisfied with the condition of the company, did not make the subscription; and on the nineteenth day of December, 1870, reported his doings to the county court, ending in the words, "the bonds of said township are, therefore, not subscribed." This report was formally approved by the county court.

Seven months after making the order above set forth, and on the 18th of January, 1871, the county court made another order, which recited that the subscription had been made to said Chillicothe Company, that a consolidation had been made between that and another company, resulting in the Lexington, Lake, and Gulf Railroad Company; and it directed that $90,000 of bonds be issued to the latter company, in payment and satisfaction of the original subscription as aforesaid; and concluded: "Said James M. Boreing (their agent to receive and dispose of the bonds) is hereby authorized to subscribe said stock to said railroad company," the Lexington, Lake, and Gulf Railroad Company.

Boreing did make the subscription on the books of the new company, which was accepted by that company; and then, for the first time, a certificate of stock was issued to the county.

The court below found that the defendants in error were

On the 25th of March, 1869, another act was passed and approved, entitled "An Act to authorize certain counties and towns therein named to subscribe stock in railroad companies."

The first section of this act authorized the counties of Rock Island, Mercer, Warren, McDonough, Schuyler, Cass, Scott, and Greene to purchase or subscribe for shares of the capital stock in any railroad company already organized, or thereafter to be organized, which should pass in whole or in part through the said counties, or any or either of them, to such an amount as any of said counties, or either of them, should determine and deem proper. The second section provided that such subscriptions might be made by an agent appointed by the board of supervisors, in counties that might adopt township organization (which it was conceded Warren County had done), upon such terms and conditions as the corporate authorities of any such county might prescribe; and for the payment of such stock the board were authorized to borrow money at interest not exceeding ten per cent, or to pay for the same in the bonds, orders, or warrants of the county, in sums not less than $100, to run not exceeding twenty years, at interest not exceeding ten per cent per annum. The fourth section directed that all such bonds, &c., should be issued by the clerk of the county court, under the seal of his office, upon the order of the county authorities, and the county clerk to make registration thereof, and certify the same on the bonds. The tenth section declared that no such subscription to stock should be made, unless the same was submitted to a vote of the people of such county, and should receive a majority of the votes cast; and that the question should be submitted in such manner as the county authorities might determine.

It is claimed by the defendant in error that the county of Warren derived authority to issue the bonds in question under the last-mentioned act. The road of the Rockford, Rock Island, and St. Louis Railroad Company was partially built north and south of Warren County before the election hereafter mentioned was held, and it was declared by the company that it would go through that county; and it is not disputed that it was, in fact, afterwards laid through the same as proposed.

The proceedings of the board of supervisors and county officers which resulted in the issue of the bonds were as follows: —

On the 23d of August, 1869, the board called an election of the people of the county to be held on Sept. 23, 1869, for the purpose of determining the question of a county subscription of $200,000 to the stock of said railroad company, including the $100,000 previously voted to the St. Louis, Alton, and Rock Island Railroad Company, claimed to have been transferred to the former company by virtue of an act of assembly passed in 1869. Notices of the election were not published until Aug. 27, 1869 (less than thirty days prior thereto), and some of those posted were not posted for the full period of thirty days, and in one township none were posted at all; but in all the others notices were published for periods varying from twenty to thirty days. The election was held pursuant to notice on the 23d of September, 1869; and one thousand seven hundred and seventy-five votes were cast for the subscription, and nine hundred and seventy-five against it, the total vote of the county at the last previous general election being four thousand seven hundred and thirty-one. The vote was duly canvassed, and filed in the clerk's office; and on the 16th of March, 1870, the board declared that the election had resulted in favor of the subscription, and ordered its chairman to make the same accordingly.

On the 18th of July, 1870, one Harding, a tax-payer and citizen of the county, filed a bill in chancery, on behalf of himself and all other tax-payers, against the county officers and the railroad company, in the Circuit Court of Warren County, asking for an injunction to prevent the subscription of stock and the issue of bonds therefor, and that the proceedings of the board be set aside and declared void. The bill set forth the foregoing facts; and a temporary injunction was granted, but was subsequently dissolved on the 23d of January, 1871. The complainant prayed an appeal from the order dissolving the injunction, which was not granted; and the cause went to final hearing on the 2d of February, 1871, when the bill was dismissed. Thereupon the complainant appealed to the Supreme Court of the State. The cause having been heard at the first

term thereafter, the decree of the Circuit Court was reversed in 1873, and the cause remanded with directions to enter a decree for the complainant, according to the prayer of the bill. In accordance with these directions, a decree was duly entered in the Circuit Court.

Meantime, pending these proceedings, after the dissolution of the temporary injunction by the Circuit Court, and on the 25th of January, 1871, the bonds in question, to the amount of $200,000, in the form above set forth, were executed under the hand of the clerk of the board of supervisors of Warren County, by order of a majority of the board, at a meeting held on that day. They were then delivered by the clerk, as directed by the board, to the Rockford, Rock Island, and St. Louis Railroad Company, in payment of a subscription to the stock of said company, which purported to be made in March, 1870, in the name of the county, by the chairman of said board, in pursuance of the order of the board, before stated. They were registered in the office of the clerk of Warren County, and so certified by him Jan. 25, 1871, and were registered Jan. 27, 1871, in the office of the State auditor of public accounts, and so certified by him on the bonds.

The defendant in error subsequently became a purchaser of the coupons in question for value, before maturity, and without any actual notice of their alleged invalidity, or of any suit in relation thereto.

Mr. George F. Harding for the plaintiff in error.

The Constitution of Illinois of 1870 prohibits a county from becoming a subscriber to the capital stock of a railroad company, unless authorized by a vote of the people.

The notice for the election not having been given in compliance with the provisions of the act of March 4, 1869, the bonds are void.

The Supreme Court of Illinois, in *Harding* v. *Rockford, Rock Island, & St. Louis Railroad Co.* (65 Ill. 90), decided that those provisions were not repealed by the tenth section of the act of March 25, 1869.

The coupons here sued on were issued pending that suit, and it was a notice to purchasers of all matters in litigation, so as to affect and bind them. *Murray* v. *Ballou*, 1 Johns.

(N. Y.) Ch. 566; *Murray* v. *Lylburn*, 2 id. 441; 2 White & Tudor's Leading Cases, 64; *Park* v. *Johnson*, 11 Wend. (N. Y.) 453.

That rule applies to personal as well as to real property, and to personal property of every description. *McCutcheon* v. *Miller*, 31 Miss. 83; *Bishop of Winchester* v. *Paine*, 11 Ves. Jr. 200; *Same* v. *Beaver*, 3 id. 314; *Kellogg et al.* v. *Fancher et al.*, 23 Wis. 1; *Scudder* v. *Van Amburgh*, Edw. (N. Y.) Ch. 30; *Haddens* v. *Spaders*, 20 Johns. (N. Y.) 573; *McRary* v. *Fries*, 4 Jones (N. C.), Eq. 234; *Fletcher* v. *Ferrell*, 9 Dana (Ky.), 377; *Leitch* v. *Wells*, 48 Barb. (N. Y.) 650; *Murray* v. *Lylburn*, *supra*.

The only exception to the rule is unmatured negotiable paper, in existence when the suit was brought; but that exception cannot extend to paper executed *pendente lite*.

Mr. Charles M. Osborn and *Mr. Sanford B. Perry*, *contra*.

The statutes of 4th and 25th March, 1869, are ample authority to the county of Warren to subscribe for stock in the Rockford, Rock Island, and St. Louis Railroad Company, and to issue bonds, like those in question, in payment therefor, an affirmative vote of the county having been first given in favor thereof.

The board of supervisors was invested with full power to submit to the voters of the county the question of subscribing to the stock of the railroad company, and to decide whether the election was properly held, and the majority vote cast in favor of the subscription. The board having ordered the bonds in question to be issued, with a recital therein that they were issued in conformity with the vote of the electors of said county, they are, in the hands of a *bona fide* holder for value, conclusive proof that such an election was legally called and held, and are binding on the county. *Commissioners of Knox County* v. *Aspinwall et al.*, 21 How. 539; *Bissell* v. *City of Jeffersonville*, 24 id. 287; *Moran* v. *Commissioners of Miami County*, 2 Black, 722; *Van Hostrup* v. *Madison City*, 1 Wall. 291; *Grand Chute* v. *Winegar*, 15 id. 355; *Lynde* v. *The County*, 16 id. 6; *Kenicott* v. *The Supervisors*, id. 452; *St. Joseph Township* v. *Rogers*, id. 644; *Town of Coloma* v. *Eaves*, 92 U. S. 484; *Marcy* v. *Town of Oswego*, id. 637; *Humboldt Township* v. *Long et al.*, id. 642;

County of Calloway v. *Foster*, 93 id. 567; *Commissioners, &c.* v. *Thayer*, 94 id. 631; *Commissioners, &c.* v. *January*, id. 202, *Commissioners, &c.* v. *Clark*, id. 278; *Town of East Lincoln* v. *Davenport*, id. 801.

Such a holder is required only to ascertain whether the county was authorized by law to subscribe for stock in the railroad company named in the bonds, and to issue them in payment therefor. *Commissioners of Knox County* v. *Aspinwall*, *supra*; *Moran* v. *Commissioners of Miami County*, *supra*; *Mercer County* v. *Hacket*, 1 Wall. 83; *Meyer* v. *City of Muscatine*, id. 384; *Supervisors* v. *Schenck*, 5 id. 772; *Pendleton County* v. *Amy*, 13 id. 297; *Nugent* v. *The Supervisors*, 19 id. 241; *Lynde* v. *The County*, *supra*; *Kenicott* v. *The Supervisors*, *supra*; *Town of Coloma* v. *Eaves*, 92 U. S. 484; *County of Moultrie* v. *Savings Bank*, id. 631.

Such bonds, with the interest coupons attached, are in the hands of such a holder negotiable securities, having all the properties of commercial paper: *White* v. *Vermont & Massachusetts Railroad Co.*, 21 How. 575; *Moran* v. *Commissioners, &c.*, *supra*; *Mercer County* v. *Hacket*, *supra*; *Gelpcke* v. *Dubuque*, 1 Wall. 175; *City of Lexington* v. *Butler*, 14 id. 282; *St. Joseph Township* v. *Rogers*, *supra*; *Humboldt Township* v. *Long et al.*, *supra*; *Commissioners, &c.* v. *Clark*, *supra*; *Cromwell* v. *County of Sac*, 96 U. S. 51; and the doctrine of *lis pendens* is not applicable to them. *Leitch* v. *Wells*, 48 N. Y. 586; *Stone* v. *Elliott*, 11 Ohio St. 252; *Kieffer* v. *Ehler*, 18 Pa. St. 388; *Durant* v. *Iowa County*, 1 Woolw. 69; *Winston* v. *Westfeldt*, 22 Ala. 760; *National Bank of Washington* v. *Texas*, 20 Wall. 72; *Olcott* v. *Supervisors*, 16 id. 678; 2 Lead. Cas. in Eq. (ed. of 1877) 196; 2 Powell, Mortgages, 618.

MR. JUSTICE BRADLEY, after stating the case, delivered the opinion of the court.

It is insisted by the plaintiff in error that the bonds and coupons were void, for want of authority in the board of supervisors to issue them, in consequence of insufficient notice of the election. It must be conceded, however, that if the case is to be governed by the act of March 25, 1869, there was no defect in the proceedings. But it is insisted that the act of March 4,

1869, which prescribed a notice of thirty days, by publication in a newspaper, was still binding, and was not abrogated by the act of March 25, the tenth section of which provided that the question should be submitted in such manner as the county authorities might determine.

This was the very question raised before the State court in *Harding* v. *Rockford, Rock Island, & St. Louis Railroad Co.* (65 Ill. 90); and the Supreme Court of Illinois decided that the provisions of the act of March 4 were binding, and that the election was void for want of such published notice of thirty days.

The court considered that the object of the act of March 25 was to remove the limitation as to the amount of the subscription, and to change the time for the maturity of the bonds, as imposed by the act of March 4, but not to change the time or manner of giving notice of the election; and they conclude their opinion in the following words: —

"We are of opinion that the proviso to section six (6) of the act of 4th of March is not abrogated by section ten (10) of the subsequent act. Their reconciliation, in the manner we have attempted, will best subserve the public good; and the validity of both, thus reconciled, will make the legislation more in accordance with reason, shield the legislature from an absurdity, and prevent serious consequences.

"As the election was invalid for want of sufficient notice, there was no power to make the subscription, and none was conferred by the vote to issue the bonds."

If we accept this as the true construction of these statutes, the question then arises, whether, the bonds having been issued and acquired under the circumstances shown by the special findings of the Circuit Court, the defendant in error is entitled to recover. Is the county bound to pay the coupons in question to one who purchased them for value before maturity, and without any actual knowledge of the facts relied on to invalidate them, or of the pendency of the suit brought to have the proceedings declared void?

This involves two questions: 1. Are the bonds so absolutely void, as against the county, as to be invalid under all circumstances, even in the hands of a *bona fide* holder for value? 2. If

not, was the commencement and pendency of the suit for having the proceedings of the supervisors declared void, and preventing the issue of the bonds, such notice to all persons of their invalidity, as to defeat the title of a purchaser for value before maturity, having no actual notice of the suit, or of the objection to the bonds?

The first question is to be viewed in the light of the former decisions of this court. We have substantially held, that if a municipal body has lawful power to issue bonds or other negotiable securities, dependent only upon the adoption of certain preliminary proceedings, such as a popular election of the constituent body, the holder in good faith has a right to assume that such preliminary proceedings have taken place, if the fact be certified on the face of the bonds themselves, by the authorities whose primary duty it is to ascertain it. *Commissioners of Johnson County* v. *January*, 94 U. S. 202; *Commissioners of Douglass County* v. *Bolles*, id. 104, 108; *Town of Coloma* v. *Eaves*, 92 id. 484, 488; *Lynde* v. *The County*, 16 Wall. 6. Now, that is the case here. The bonds are executed by the board of supervisors, or, which is the same thing, by their clerk, under their order and direction. They certify on their face that they are issued in conformity with the vote of the electors of said county, cast at an election held on the twenty-third day of September, 1869. This, according to the cases, is a sufficient authentication of the fact that an election was duly held, to protect a *bona fide* holder for value.

A similar defence, that the bonds were absolutely void for want of authority (and so declared by the State tribunals), in consequence of irregularity in the preliminary proceedings, was set up in the case of *Lee County* v. *Rogers*, 7 Wall. 181. That case arose in Iowa. A county election had been held to determine on the subscription of stock to a railroad, and the issue of bonds in payment thereof. A bill in equity was filed to prevent such subscription and issue, and was successful. The legislature then passed a healing act, and the bonds were issued. A year after this, another bill was filed to have both the act and the bonds declared void, but was dismissed. Two years after this dismissal, a bill of review was filed to reverse the last decree; and it was reversed, and the bonds and the healing act

itself were declared void. This court held that, notwithstanding all this, the *bona fide* holder of the bonds was entitled to recover upon them. It being contended that he was bound to take notice of the *lis pendens* for avoiding the bonds, the court held otherwise, on the ground that there was no continuous litigation. The first suit was determined before the issue of the bonds, and the second was not commenced until after they had been issued. No suit was pending when they were issued.

This case is an authority for the position that bonds of this sort may be valid in the hands of a *bona fide* holder, notwithstanding the fact that the preliminary proceedings requisite to their issue may have been so defective as to sustain a direct proceeding against the county officers to annul them or prevent their issue.

This brings us to the second question; namely, whether the pendency of the chancery suit for vacating the proceedings of the supervisors and preventing the issue of the bonds, in this case, was in itself constructive notice to all persons of their invalidity, or of the objections raised against them. This question has an important bearing upon the case; for, whilst the bonds may be valid in the hands of a *bona fide* purchaser before maturity, and without notice of any defect or vice in their origin, this cannot be said in reference to one who has such notice, or who is chargeable therewith.

It is a general rule that all persons dealing with property are bound to take notice of a suit pending with regard to the title thereto, and will, on their peril, purchase the same from any of the parties to the suit. But this rule is not of universal application. It does not apply to negotiable securities purchased before maturity, nor to articles of ordinary commerce sold in the usual way. This exception was suggested by Chancellor Kent, in one of the leading cases on the subject in this country, and has been confirmed by many subsequent decisions.

The learned Chancellor gave the history and grounds of the general doctrine of *lis pendens*, in 1815, in the case of *Murray* v. *Ballou* (1 Johns. (N. Y.) Ch. 566), which is the leading American case on the subject, and deserves the careful study of every

student of law. The fundamental proposition was stated in these words: "The established rule is, that a *lis pendens*, duly prosecuted, and not collusive, is notice to a purchaser so as to affect and bind his interest by the decree; and the *lis pendens* begins from the service of the subpœna after the bill is filed." p. 576. That case related to land, with regard to which the doctrine is uniformly applied.

In the subsequent case of *Murray* v. *Lylburn* (2 id. 441), decided in 1817, the same doctrine was held to apply to choses in action (in that case, a bond and mortgage) assigned by one of the parties *pendente lite*. But the Chancellor, with wise prevision, indicated the qualification to which the rule should be subject in such cases. Speaking of the trustee, whose acts were in question, he said: "If Winter had held a number of mortgages, and other securities, in trust, when the suit was commenced, it cannot be pretended that he might safely defeat the object of the suit, and elude the justice of the court, by selling these securities. If he possessed cash, as the proceeds of the trust estate, or negotiable paper not due, or perhaps movable personal property, such as horses, cattle, grain, &c., I am not prepared to say the rule is to be carried so far as to affect such sales. The safety of commercial dealing would require a limitation of the rule; but bonds and mortgages are not the subject of ordinary commerce; and they formed one of the specific subjects of the suit against Winter, and the injunction prohibited the sale and assignment of them, as well as of the lands held in trust."

Here we have the whole law on the subject. Subsequent cases have only carried it out and applied it. We shall cite only a few of the most important.

In *Kieffer* v. *Ehler* (18 Pa. St. 388), decided in 1852, it was held that, although a promissory note not due is liable to attachment under the Pennsylvania statute of 1836, relative to executions; yet such attachment is unavailable against a *bona fide* holder for value of a negotiable note, where it was obtained after the attachment was served on the maker of the note as garnishee, and after its return, but before the maturity of the note, and without actual notice of the attachment. Mr. Justice Lowrie, in that case, speaking of such instruments,

says: "They have a legal quality that renders the hold of an attachment upon them very uncertain. Unlike all other property, they carry their whole evidence of title on their face; and the law assures the right of him who obtains them for valuable consideration, by regular indorsement, and without actual notice of any adverse claim, or of such suspicious circumstances as should lead to inquiry. To hold that an attachment prevents a subsequent *bona fide* indorser for value from acquiring a good title, would be almost a destruction of one of the essential characteristics of negotiable paper." He admits that the negotiation of such paper by a defendant after he had notice of the attachment would be a fraud upon the law; but he suggests the remedy, namely, that the court should exert its power to prevent it, by requiring the instrument to be placed in such custody as to prevent it from being misapplied, — a remedy analogous to that of injunction and sequestration by a court of chancery.

In a subsequent case in Pennsylvania, that of *Diamond* v. *Lawrence County* (37 id. 353), it is true, the same court held the purchaser of county bonds *pendente lite* to be affected with constructive notice; but placed its decision specially on the ground that, in Pennsylvania, such bonds are not deemed negotiable securities.

The case of *Winston* v. *Westfeldt*, which came before the Supreme Court of Alabama in 1853 (22 Ala. 760), is directly in point, and was decided upon great consideration and after exhaustive arguments by counsel. The note sued on, at the time of its purchase by the plaintiff, was the subject of controversy in the chancery court; and the question was, whether the proceedings operated as notice to him, "or, in other words," says the court, "does the doctrine of *lis pendens* apply to negotiable paper?" And the decision was, that it does not. The arguments of the counsel, as well as the judgment of the court, in this case, are very instructive; but we forbear to accumulate further quotations.

Suffice it to say, that the same doctrine is held and adjudged in *Stone* v. *Elliott*, 11 Ohio St. 252; *Mims* v. *West*, 38 Ga. 18; *Durant* v. *Iowa County*, 1 Woolw. 69; and *Leitch* v. *Wells*, 48 N. Y. 585, overruling same case in 48 Barb. 637. The case of

Durant v. *Iowa County* was decided by Mr. Justice Miller, and related to coupons attached to county bonds, being parallel to the case now under consideration, except that the coupons had been issued before the *lis pendens* was instituted. Justice Miller, in this case, meets the objection that the rule may operate to defeat the action of the court by withdrawing from its jurisdiction the subject-matter of the controversy. He says: "It is insisted that, in this view, proceedings to enjoin the transfer of such securities are futile. Not so. An injunction will prevent the transfer of the securities during the pendency of the suit, and a decree that they be delivered up to be cancelled, if enforced at once, will protect the parties. A neglect to take out the injunction, or to enforce the decree, is the fault of the plaintiff, not of the law."

In the present case, an injunction was issued, and, so long as it was in force, was obeyed by the board of supervisors. The Circuit Court saw cause to dissolve the injunction, it is true, and eventually dismissed the bill; and it was not till two years afterward that the Supreme Court reversed this decree. Whether the Circuit Court did right in dissolving the injunction without dismissing the bill (which was emphatically an injunction bill); or whether the complainant ought not, at once, to have submitted to a dismissal, taken an appeal, and adopted the necessary proceedings for a continuance of the injunction, — it is unnecessary now to inquire. It cannot be said that the court was destitute of power to maintain its own jurisdiction and protect its suitors. If it did not choose to exert this power, and any failure of justice ensued, it is to be attributed to that inherent imperfection to which the administration of all human laws is liable. At all events, the evil is no greater than that which would befall the innocent purchasers of the bonds, if the loss should be made to fall upon them. From this dilemma there is no escape, unless we abrogate the privileges of commercial paper, and make it the duty of those who take it to inquire into all its previous history and the circumstances of its origin. This would be to revolutionize the principles on which the business of the commercial world is transacted, and would require a new departure in the modes and usages of trade.

The only thing calculated to raise any doubt, in the present case, is the fact that the bonds in question were not in existence when the suit to prevent their issue was brought. But we see no good reason for limiting the exception to paper or securities previously in existence. The court, as we have seen, has ample power, by injunction, to prevent their execution; and the reason of the exception is as applicable to the one class as to the other. Its object is to protect the commercial community by removing all obstacles to the free circulation of negotiable paper. If, when regular on its face, it is to be subject to the possibility of a suit being pending between the original parties, its negotiability would be seriously affected, and a check would be put to innumerable commercial transactions. These considerations apply equally to securities created during, as to those created before the commencement of, the suit; and as well to controversies respecting their origin, as those respecting their transfer. Both are within the same mischief, and the same reason.

This very question was involved in *City of Lexington* v. *Butler*, 14 Wall. 283. In that case, irregularities had occurred in the preliminary proceedings, and the city authorities refused to issue the bonds. A *mandamus* was applied for by the railroad company, for whose use the bonds were intended; and a judgment of *mandamus* was rendered, to compel the city to issue them, and it issued them accordingly. Subsequently, this judgment was reversed by the Court of Appeals of Kentucky, and an injunction was obtained to prevent the railroad company from parting with the bonds. The injunction was not obeyed; the bonds were negotiated whilst proceedings were still pending, and were purchased by the plaintiff for value before maturity, without any knowledge of these circumstances. This court held that the bonds were valid in his hands. The point in question received no discussion in the opinion of the court, it is true; but it appeared on the pleadings, was made in the argument, and must have been passed upon in arriving at the judgment.

Whilst the doctrine of constructive notice arising from *lis pendens*, though often severe in its application, is, on the whole, a wholesome and necessary one, and founded on principles

affecting the authoritative administration of justice; the exception to its application is demanded by other considerations equally important, as affecting the free operations of commerce, and that confidence in the instruments by which it is carried on, which is so necessary in a business community. The considerations that give rise to the exception apply with full force to the present case.

We think that the result reached by the Circuit Court was correct.

Judgment affirmed.

MR. JUSTICE MILLER, MR. JUSTICE FIELD, and MR. JUSTICE HARLAN dissented.

NOTE. — In *County of Warren* v. *Post* and *County of Warren* v. *Portsmouth Savings Bank*, error to the Circuit Court of the United States for the Northern District of Illinois, which were argued at the same time and by the same counsel as was the preceding case, MR. JUSTICE BRADLEY, in delivering the opinion of the court, remarked: These cases are in all respects similar to that of *County of Warren* v. *Marcy*, and must have the same result.

The judgments therein are respectively

Affirmed.

MR. JUSTICE MILLER, MR. JUSTICE FIELD, and MR. JUSTICE HARLAN dissented.

POWDER COMPANY *v.* BURKHARDT.

An incorporated company entered into a contract with A., the owner of letters-patent for an explosive compound called "dualin," whereby he undertook to manufacture it, as required by the company from time to time, in quantities sufficient to supply the demand for the same, and all sales produced or effected by the company. The contract provided that all goods he manufactured should be consigned to the company for sale, and all orders he received should be transferred to it to be filled; that the parties should equally share the net profits arising from such sales, and equally bear all losses by explosion, or otherwise, so far as the loss of the dualin was concerned, but the company assumed no risk on A.'s building or machinery; that the company should, semi-monthly, advance to him, on his requisition, a stipulated sum, for paying salaries, for labor, and for his personal account, and such further reasonable sums as might be required for incidental expenses of manufacture; and should furnish him all the raw materials needed to manufacture said explosive in quantities sufficient to supply the demand created by the company, or should advance the money necessary to purchase them, — the said advances and the cost of such materials to be charged to him

against the manufactured goods to be by him consigned to the company. Certain of the materials which had been furnished him under the contract, and others which he had purchased with money advanced by the company, were seized upon an execution sued out on a judgment against him in favor of a third party. The company then brought this action, to recover for the wrongful conversion of the materials so seized. *Held*, that the delivery of them by the company to A. did not create a bailment, but that, upon such delivery, they, as well as those purchased by him with the money so advanced, became his sole property, and, as such, were subject to the execution.

ERROR to the Circuit Court of the United States for the District of Massachusetts.

This was an action in the nature of trover, by the Laflin and Rand Powder Company, of New York, against Gottlieb F. Burkhardt, for the alleged wrongful conversion of certain acids, glycerine, and other raw materials, bought by him under execution, as the property of Carl Dittmar.

At the trial by the court, a jury having been waived, the plaintiff put in evidence a contract entered into July 4, 1871, between Dittmar as party of the first part, and the company as party of the second part, which, after reciting that he was the inventor and discoverer of an explosive compound called by him "dualin," for which he had obtained letters-patent, and of which he was then engaged in the manufacture and production at Neponset, Mass., and that the company desired "to obtain, in connection with the said party of the first part, the sole and exclusive right to use and sell to others said 'dualin,'" provides as follows: —

"*First*, The said party of the first part agrees to manufacture and produce said 'dualin' in suitable packages and cartridges, as required by the said party of the second part, from time to time, in quantities sufficient to supply the demand for the same, and all sales of the same produced and effected by the party of the second part, it being fully understood and agreed that the said party of the first part has the sole and exclusive right to manufacture 'dualin,' except as hereinafter modified, and that the said party of the second part has the sole and exclusive right to sell such dualin under said letters-patent, and such sole and exclusive rights are hereby granted, fixed, and determined as aforesaid.

"*Second*, The dualin manufactured and put up by the party of the first part under this agreement, for sale by the party of the second part, shall be of the best quality in all respects, and shall be packed

in cartridges and packages to the satisfaction of the party of the second part, and according to its directions, by and through its executive officers.

"*Third*, All the goods manufactured by the said party of the first part shall be consigned to the said party of the second part for sale; and all orders for explosives given to or received by said party of the first part are to be turned over and transferred to the party of the second part, to be filled by it.

"*Fourth*, The said party of the second part hereby accepts the said sole and exclusive right of sale of said dualin, and engages to enter into the business of selling the same to the best of its power and ability, the principal design being to create a demand for the use of dualin, and to control the same for the joint interest of the parties concerned.

"*Fifth*, The net profits arising from such sales shall be divided equally, share and share alike, between the said parties, and shall consist of the difference between the actual cost of manufacture and the net proceeds of sales. Such cost of manufacture to include transportation to New York; but neither in such cost of manufacture or expenses of sale shall be included any charge for rent or use of buildings, storage on the premises of the parties, or insurance, other than marine insurance actually paid or personal commissions; and no sales shall be made at less than eighty (80) cents per lb., unless by consent of both parties.

"*Sixth*, Any and all losses, by explosion or otherwise, shall be borne equally by the said parties, so far as loss of the crude material or dualin is concerned; but the party of the second part assumes no risk on the buildings or machinery of the manufacturer.

"*Seventh*, Regular books of account, containing regular entries of all the matters pertaining to this agreement and the carrying out of the same in detail, shall be kept by the said parties respectively, and free access shall be had to the same at all reasonable times by both of said parties or their legal representatives; and statements shall be made embracing all the particulars above mentioned in full, so that the net profits can be ascertained by both parties from time to time, as and when required by either, but not oftener than once in three months. All the statements and accounts rendered and made out for the purpose of ascertaining the amount of the net profits shall be verified under oath by the party making or rendering the same, provided such requisition is desired by the other party. A division of net profits shall be made as above stated every three months.

"*Eighth*, The said party of the first part hereby guarantees the validity of the said three letters-patent, and agrees to defend the same, and to protect the said party of the second part in the rights hereby granted, and save them harmless in defending the same from any and all infringements thereof. The costs and damages of any suits in such protection or defence to be equally shared. The party of the first part agrees to pay the party of the second part, at the expiration of the contract, the half part of the costs belonging to the party of the second part, with interest annually.

"*Ninth*, This agreement is binding upon the heirs, administrators, executors, successors, and assigns of the said parties, and shall continue during the term of ten years; and in case the party of the first part shall make any new invention or discovery in explosives or explosive compounds, or any improvements therein or relating to the same in the matter of the explosion of the same or otherwise, the provisions of this agreement shall apply thereto in all respects the same as though incorporated therein at the beginning.

"*Tenth*, In case of the default on the part of the said party of the first part, or his failure to comply with and carry out the provisions of this agreement on his part, according to the true intent and meaning thereof, the said party of the second part shall have, and in that case the party of the first part hereby grants to the party of the second part, the license and right to manufacture dualin under said letters-patent for the aforesaid term of ten years, and to sell the same, subject to the provisions of this contract, or to the division of net profits; and, in order to provide for such case, the said party of the first part covenants and agrees to teach some person, to be named by the said parties and mutually agreed upon, the practical method of manufacturing dualin, in all the particulars and manipulations thereof, to the best of his knowledge and ability, so that the person above referred to may understand the same fully and practically in all respects.

"*Eleventh*, The party of the second part shall sell no other explosive compound than said dualin and common gunpowder, and such other explosives as may be manufactured by said party of the first part during the term aforesaid of this agreement, unless it shall be in the interest of both parties.

"*Twelfth*, The party of the second part shall advance to the party of the first part, on his requisition therefor, for the purposes of paying salaries, for labor, for incidental expenses of manufacture, and for his personal account, semi-monthly, an amount for salaries, $100; for labor, $200, if necessary; for his personal account, $250;

and such further reasonable sums as may be required for incidental expenses of manufacture; and shall also procure and furnish to the party of the first part, on his requisition, all the new materials needed to manufacture said explosives in quantities sufficient to supply the demand created by the party of the second part, or the money necessary for the purchase thereof, the said advances and the cost of such new material to be charged to said party of the first part against the manufactured goods to be consigned to the party of the second part as above provided."

The plaintiff then introduced evidence tending to show that the goods in the declaration mentioned were raw materials used in the manufacture of dualin, and were in the possession of Dittmar at his factory, for the purpose of being so manufactured under said contract; that the greater part of said raw materials had been procured and paid for by the plaintiff, and had become its property, and afterwards was furnished and delivered by it to Dittmar upon his requisition therefor, to be manufactured under said contract; that the balance of said raw materials had been purchased by him to be manufactured as aforesaid, with money furnished him by the plaintiff, upon his requisition therefor, under said contract, which requisition specified the amount required for each bill; that while the said raw materials were at said factory to be manufactured into dualin, under said contract, Burkhardt procured and directed them to be sold upon an execution issued upon a judgment in his favor against Dittmar, and that he bought them at the sheriff's sale upon said execution; and that afterwards, and before the bringing of this action, the plaintiff demanded them of the defendant.

The plaintiff further introduced evidence tending to show that, in the accounts between it and Dittmar, all the raw materials, when delivered by it to him, were charged in its books, together with the other expenses of the manufacture, to "dualin account," and said account was credited with the sales of dualin, and with the stock on hand, including the raw materials which he had at his factory; that he kept no book of charges, but kept a manufacturer's journal, in which was entered the materials as he received them, as well those delivered by the plaintiff as those purchased by himself; and that he

rendered the plaintiff a monthly return of the raw materials on hand at his factory, and a return so rendered Jan. 1, 1872, included all the goods mentioned in the pleadings. The plaintiff also introduced evidence of the value of the goods, and offered to show that the defendant had knowledge of said contract, and knew that said goods were furnished thereunder.

At the close of its evidence, the plaintiff requested the court to rule that the raw materials furnished and delivered by it to Dittmar, as aforesaid, remained its property, and that the raw materials purchased by him with the money it furnished, as aforesaid, were also its property; but the court refused so to rule, and ruled as matter of law, that under the provisions of said contract the raw materials furnished by the plaintiff became the sole property of Dittmar as soon as the same were delivered to him, and were liable to be taken for his debts, and that the raw materials which he purchased with the money advanced to him therefor by the plaintiff upon his requisition as aforesaid were also his property, and directed that judgment be entered for the defendant.

The plaintiff excepted in due time to the refusal to rule as requested, and to the ruling as made, and assigns them for error here.

Mr. Francis W. Hurd for the plaintiff in error.

Under the contract, the title to and property in the raw materials delivered by the company to Dittmar, to be manufactured into dualin, did not pass to him. The terms of the contract import a bailment of the raw materials, and not a sale or a barter of them. *South Australian Insurance Co.* v. *Randall*, Law Rep. 3 P. C. 101; *Barker* v. *Roberts*, 8 Me. 101; *Smith* v. *Jones*, 7 Cow. (N. Y.) 328; *Pierce* v. *Schenck*, 3 Hill (N. Y.), 28; *Mallory* v. *Willis*, 4 N. Y. 76; *Foster* v. *Pettibone*, 7 N. Y. 433; *Hyde* v. *Cookson*, 21 Barb. (N. Y.) 92; *King* v. *Humphreys*, 10 Pa. St. 217; *Stevens* v. *Briggs*, 5 Pick. (Mass.) 177; *Denny* v. *Cabot*, 6 Metc. (Mass.) 82; *Judson* v. *Adams*, 8 Cush. (Mass.) 556; *Schenck* v. *Saunders*, 13 Gray (Mass.), 37; *Mansfield* v. *Converse*, 8 Allen (Mass.), 182; *Buffum* v. *Merry*, 3 Mason, 478; Jones, Bailm. 107; Story, Bailm., sects. 283, 439; Edwards, Bailm. 340; 2 Kent, Com. 589.

The money sent to him was to be applied in purchasing

materials, which he was to hold for a specific purpose, as the company's property, and in trust for it.

Mr. George Sennott, contra.

MR. JUSTICE HUNT delivered the opinion of the court.

There is but a single question in the case; to wit, were the acids and other articles seized upon Burkhardt's execution the property of Dittmar? They were nearly all of them articles furnished to him by the Powder Company, under the agreement of July 4, 1871, or purchased with the money supplied by the company under that agreement.

Dittmar, having patents for the manufacture of explosive compounds, seems to have been in the condition, formerly so common to inventors, of possessing more science than money. What he lacked, the Powder Company professed to be ready to supply, and with the expectation of being compensated by receiving the one-half of the net profits to be made by the manufacture and sale of the said compounds. This was the general purpose and intent of the parties.

Among the clauses of the said agreement, the third, fifth, and twelfth may be referred to as illustrating its meaning.

The plaintiff in error contends that the present is the case of a bailment, and not of a sale or a loan of the goods and money to Dittmar. It is contended that the question of bailment or not is determined by the fact whether the identical article delivered to the manufacturer is to be returned to the party making the advance. Thus, where logs are delivered to be sawed into boards, or leather to be made into shoes, rags into paper, olives into oil, grapes into wine, wheat into flour, if the product of the identical articles delivered is to be returned to the original owner in a new form, it is said to be a bailment, and the title never vests in the manufacturer. If, on the other hand, the manufacturer is not bound to return the same wheat or flour or paper, but may deliver any other of equal value, it is said to be a sale or a loan, and the title to the thing delivered vests in the manufacturer. We understand this to be a correct exposition of the law. *Pierce* v. *Schenck*, 3 Hill (N. Y.), 28; *Norton* v. *Woodruff*, 2 N. Y. 153; *Mallory* v. *Willis*, 4 id. 76; *Foster* v. *Pettibone*, 7 id. 433.

Adopting this principle, let us examine with more particularity the twelfth clause of the contract. We find: —

1st, That the Powder Company there undertakes to "advance to the party of the first part" certain materials and certain moneys, some of which are obviously for his personal advantage. To advance is to "supply beforehand," "to loan before the work is done or the goods made." This is the popular understanding of the language, as well as the accurate definition. Dittmar was to make certain articles of sale, and the Powder Company undertook to supply beforehand, to loan to him before his goods were made, certain materials and moneys, to be used in part in making the goods, and in part for his personal benefit.

2d, This advance or loan was to be made upon the requisition of Dittmar, and was for the purposes following: To pay, semi-monthly, for salaries, $100; for labor, $200; for incidental expenses of manufacture, such sums as may be found necessary; for Dittmar's personal account, $250. These sums must necessarily be paid in money, and the title to the money must necessarily be in Dittmar, to be expended at his discretion. Especially is this true of the amount of $6,000 per annum advanced for "personal account."

3d, The Powder Company is to furnish to Dittmar, upon his requisition, all the raw materials needed to manufacture said explosives; or,

4th, Furnish to Dittmar the money necessary for the purchase of said materials.

5th, The said advances and the cost of the raw material are to be charged to Dittmar against the manufactured goods to be consigned to the Powder Company, as before provided.

These various provisions show that the materials to be sent were to be delivered to Dittmar, to be in his actual possession and under his absolute control. We see nothing requiring that the identical acids sent should be used in the manufacture of the explosives, and nothing to prevent an exchange by Dittmar for other materials, if he found any of the articles to be unsuitable, or if he found that he had too much of one kind and too little of another, acting honestly in the interest of both parties. The case is quite different from the single mechanical transaction of turning a specific set of logs into boards or a specific lot

of wheat into flour, where there is no room for judgment or discretion.

It will be observed, also, that the agreement to furnish money semi-monthly requires payments for Dittmar's personal account, as well as for the uses of the manufacture. This is significant to show that every thing was intrusted to Dittmar personally, and that the Powder Company relied upon the general result.

The agreement on the subject of providing materials concludes thus: "Or the money necessary for the purchase thereof." If the Powder Company had made these advances in money, which was received by Dittmar, and by him placed in his money-drawer, or deposited to his credit in bank, the money would have been his property, subject to the payment of his debts; a part of his estate, in the event of his death or his bankruptcy. The request to charge, on which the only exception in the case arises, included both articles furnished and that purchased with the money furnished by the company. Both were placed by the counsel upon the same basis.

We think the goods *in specie* and the money, if it had been supplied, are subject to the same rules, and that they became the property of Dittmar, for which he was liable to account to the Powder Company, as for so much in value to be charged against the manufactured goods which are to be consigned to the Powder Company.

The "advances and the cost of the raw material are to be charged to the said party of the first part, against the manufactured goods to be consigned to the party of the second part." The charging to Dittmar of money thus advanced to him assumes that the money becomes his, and a debt is thereby created to the joint account. The raw material is also to be charged to him, or charged against him, and in like manner becomes his property, for which he must account to the joint concern. These are to be charged to him against the manufactured goods, and these goods are to be consigned by him to the Powder Company. These expressions are strongly indicative of the intention to make Dittmar a debtor for the moneys and the materials furnished to him under the contract.

While it has been held that the expression "to be consigned

to the party of the second part" is not sufficient to show ownership in the party consigning, yet the general rule is conceded, that the party consigning goods is the presumed owner of them, and it may be taken into consideration in giving construction to a doubtful instrument. In this transaction, as has been already observed, there is no agreement to return or deliver the goods, but the word "consign" is evidently used in its place.

Again: it is by no means conclusive against the Powder Company that the agreement contains no reservation of title in the goods until they should be manufactured and consigned to them. Yet the New York Reports contain decisions upon many agreements containing such reservations, and its absence may be considered, among other things, in determining the construction of the contract.

So the circumstance that the subject of the contract was a patented article, and that Dittmar was the patentee, is not decisive, and yet is worthy of consideration. No one could lawfully use Dittmar's process for the manufacture of the article of "dualin," except himself. No one could lawfully sell it when manufactured, except himself. It was lawful for him to mix these materials and to produce the compound, but it was not lawful for the Powder Company to do so. It is, then, at least a fair argument to say, that when materials were sent and delivered to him to use in a manner which he only was authorized to use, and to produce a result which he alone was authorized to produce, that both the process and the materials, when there was no stipulation to the contrary, should be taken to be his.

The arrangement between the parties provided for its continuance for a period of ten years, and that the Powder Company should have the benefit of all improvements or discoveries made by Dittmar during that time; and that, if Dittmar failed to carry out his part of the contract, the Powder Company was licensed to manufacture dualin for the period named, under his patent; and, to enable them to do this, Dittmar promised to give such practical instruction to some person to be agreed upon as would enable the Powder Company to have the benefit of this provision.

These considerations, we think, show that the contract in question is very different from those which have been the subject of decision in the numerous cases cited. The Supreme Court of Massachusetts so considered it in the case of *Dittmar* v. *Norman* (118 Mass. 319), where this same agreement came under consideration. That was an action brought by Dittmar to recover the price of certain dualin manufactured by him under the agreement of July, 1871, and before the time when it was alleged by Dittmar that the contract had been violated by the Powder Company. The Powder Company claimed to be the owner of the dualin, and forbade payment by the debtor to Dittmar. The court held that the delivery of the materials to Dittmar did not create a bailment, that the title was in him, and adjudged that he was entitled to recover.

We think the ruling at the trial was correct.

Judgment affirmed.

MACHINE COMPANY *v.* MURPHY.

1. The substantial equivalent of a thing is, in the sense of the patent law, the same as the thing itself. Two devices which perform the same function in substantially the same way, and accomplish substantially the same result, are therefore the same, though they may differ in name or form.
2. The combination, consisting of a fixed knife with a striker and the other means employed to raise the striker and let it fall to perform the cutting function, embraced by letters-patent No. 146,774, issued Jan. 27, 1874, to Merrick Murphy, for an improvement in paper-bag machines, is substantially the same thing as the ascending and descending cutting device embraced by letters-patent No. 24,734, issued July 12, 1859, to William Goodale.

APPEAL from the Circuit Court of the United States for the Eastern District of Missouri.

The Union Paper-Bag Machine Company, assignee of William Goodale, to whom letters-patent No. 24,734, for an improvement in machines for making paper-bags, were issued July 12, 1859, and subsequently extended, brought this suit to restrain Merrick Murphy and R. W. Murphy from infringing said letters. The respondents justified under letters-patent No. 146,774, issued Jan. 27, 1874, to Merrick Murphy.

The court below dismissed the bill, whereupon the complainants appealed here.

The remaining facts are stated, and the respective machines described, in the opinion of the court.

Mr. George Harding for the appellants.
Mr. Samuel S. Boyd, contra.

MR. JUSTICE CLIFFORD delivered the opinion of the court.

Rights secured to an inventor by letters-patent are property which consists in the exclusive privilege of making and using the invention, and of vending the same to others to be used, for the period prescribed by the Patent Act; and the provision is, that every patent and any interest therein shall be assignable in law by an instrument in writing. Rev. Stat., sects. 4884, 4898.

Letters-patent No. 24,734, bearing date July 12, 1859, were granted to William Goodale, for new and useful improvements in machinery for making paper-bags, as more fully described in the specification. Patents at that date were granted for the period only of fourteen years; but the record shows that the same was duly extended for the further term of seven years from the expiration of the original term, and that the patentee, on the 14th of July, two days subsequent to the extension of the patent, by an instrument in writing, sold and assigned all his right, title, and interest in the patent to the complainants, who instituted the present suit. What they charge is that the respondents are making and using the patented improvement, the title to which they acquired by virtue of the aforesaid written assignment.

Service was made; and the respondents appeared and filed an answer, setting up several defences, all of which are abandoned except the one denying the charge of infringement. Proofs were taken; and the Circuit Court, having heard the parties, entered a decree dismissing the bill of complaint. Prompt appeal to this court was taken by the complainants; and they now assign for error the decree of the Circuit Court in dismissing the bill of complaint, it being conceded that it was dismissed upon the ground that the charge of infringement was not proved.

Machines for making paper-bags are old, as both sides admit; and the evidence in this case shows that they have been constructed by many persons and in various forms for more than twenty years, and with more or less utility. Neither party, in this case, claims to be the original and first inventor of an entire machine of the kind; nor could such a claim, if made, be sustained, in view of the admitted state of the art. Improvements in various parts of such a machine are claimed by the assignor of the complainants; but, inasmuch as the charge of infringement is confined to the first claim of the patent, it will be sufficient to describe the nature and operation of the principal device embodied in that claim, without attempting to give any minute description of the other parts of the machine.

Seven claims are annexed to the specification, the one in question being described in substance and effect as follows: Making the cutter which cuts the paper from the roll in such form that in cutting off the paper it cuts it in the required form to fold into a bag without further cutting out.

Such a machine, of course, has a frame which supports all its parts, and it also has a table to support the paper as it is unwound from the roll and moved forward under the cutter. Prior to the operation, the roll is prepared, being of the proper width to fold lengthwise and form the bag. Feed-rollers are arranged in the machine, for moving the paper under the cutter as it is unwound from the roll, the cutter being attached to a horizontal bar, and working within vertical guides erected on opposite sides of the machine. Operating vertically, as the cutter does, it will be sufficient to state that it derives its upward movement from two cams on a constantly rotating horizontal shaft, and that it descends by its own weight, which is sufficient to cause the cutting of the paper by the cutter, the descent taking place during the intermissions between the feeding movements of the paper.

Devices and means for forming the bag of the desired length and width are also shown in the specification and drawings, together with the devices and means for effecting the side-lapping over the device called the former, and the devices and means for pasting one edge of the same by passing it over a paste-roller, which causes it to adhere so as to form the seam when

the edges of the blank are folded over by the lappers. Both the sides of the blank, so called, and the lap at the bottom are pasted by the means described in the specification; but it is unnecessary to enter into these details in this investigation, as the charge of infringement is limited to the first claim.

Evidence of a satisfactory character is exhibited to show that the assignor of the complainants was the first person to organize an operative machine to make paper-bags from a roll of paper in the flat sheet by a transverse cut across the same with a knife having five planes, so that the blanks, so called, when cut and folded, will present a paper-bag of the form and description given in the specification and drawings of the patent.

Wide differences exist in the arrangement of the devices composing the operative parts of the respondents' machine in question, from those exhibited in the machine of the complainants; but the frames are not substantially different, and the machine of the respondents has two uprights which afford bearings for the shaft and for the roller on which the paper is wound, and for two sets of feed-rollers which perform the same function as the feed-rollers in the complainants' patent. Instead of the cutter arranged to ascend and descend, as described in the complainants' specification, the respondents have a knife with a serrated edge, which is attached to the bed beneath the shaft on a line with the feed-rollers, lying on its side, so that the paper, when moved by the rollers, will pass freely over it, as it extends slightly beyond the edge of the bed. Being attached to the bed, the knife, though it is substantially in the form of the cutter employed in the complainants' machine, neither rises nor falls, nor would it perform any function whatever in the machine were it not for the striker, which is a straight piece of metal with a blunt edge made to revolve with the shaft, which, by the aid of certain other devices, first causes it to rise, and then throws it sharply down in such a manner that it makes a vertical blow upon the paper, causing the knife to sever it as effectually as the cutter does in the complainants' machine, showing that the two devices, to wit, the knife and the striker, operating together, perform the exact same function as that performed in the complainants' machine by the ascent and descent of the cutter.

Argument to show that the form of the knife and the cutter are substantially the same is quite unnecessary, as that is proved to a demonstration by a comparison of the two devices. Nor can it make any difference that the cutter is made to cut the paper by its own gravity, while the knife is made to cut by the fall of a device which performs no other function than to fall upon the paper at the proper moment, and cause the stationary knife to cut for the same purpose.

Decided support to that proposition is found in the testimony of the expert witness examined for the complainants. He testifies that he finds in the patent of the respondents the representation of a cutter for forming paper-bags, so shaped that, in the operation of separating the blanks from the roll of paper in the formation of bags, it will perform the same function as the cutter in the complainants' machine; giving as his reason for the conclusion, that the serrated edge of the knife, as it is there called, is so shaped as to form a blank for the bags, so that the seam may be made in the middle of the bag, and that the bottom is provided with a lap so that both parts may be firmly pasted together, and the top provided with a lip for the convenience of opening the bag when it is used.

Explanations of a valuable character are also made by the same witness in respect to the particular form of the knife employed by the respondents in their machine when used to form the lip at the top or bottom of the bag. Speaking of the fact that the knife used by the respondents has serrations or teeth of different degrees of depth, he says that their outer points all coincide with the same straight line across the paper, and that the operation of cutting, when it has progressed to the depth of the small teeth in the knife, becomes substantially the same as that performed by the cutter in the complainants' machine, for the reason that the rest of the cutting is continued by a series of cutting edges that have a lap at the bottom and a lip at the top, or, in other words, the cutting that is commenced in a straight line ceases as soon as the small teeth cease to cut, and then the coarser teeth continue the cutting operation down to their full extent, and constitute a cutter substantially like the one employed in the complainants' machine.

Suppose the explanation last given is too theoretical for prac-

tical application, still we are all of the opinion that the knife and the striker employed by the respondents perform substantially the same function as the cutter in the complainants' machine, with the devices for raising it up and letting it drop upon the paper as it is moved forward by the rollers.

Except where form is of the essence of the invention, it has but little weight in the decision of such an issue, the correct rule being that, in determining the question of infringement, the court or jury, as the case may be, are not to judge about similarities or differences by the names of things, but are to look at the machines or their several devices or elements in the light of what they do, or what office or function they perform, and how they perform it, and to find that one thing is substantially the same as another, if it performs substantially the same function in substantially the same way to obtain the same result, always bearing in mind that devices in a patented machine are different in the sense of the patent law when they perform different functions or in a different way, or produce a substantially different result.

Nor is it safe to give much heed to the fact that the corresponding device in two machines organized to accomplish the same result is different in shape or form the one from the other, as it is necessary in every such investigation to look at the mode of operation or the way the device works, and at the result, as well as at the means by which the result is attained.

Inquiries of this kind are often attended with difficulty; but if special attention is given to such portions of a given device as really does the work, so as not to give undue importance to other parts of the same which are only used as a convenient mode of constructing the entire device, the difficulty attending the investigation will be greatly diminished, if not entirely overcome. *Cahoon* v. *Ring*, 1 Cliff. 620.

Authorities concur that the substantial equivalent of a thing, in the sense of the patent law, is the same as the thing itself; so that if two devices do the same work in substantially the same way, and accomplish substantially the same result, they are the same, even though they differ in name, form, or shape. Curtis, Patents (4th ed.), sect. 310.

Apply that principle to the case before court, and it is clear that the knife in the respondents' machine, when considered in connection with the striker, is substantially the same thing as the cutter in the machine of the complainants when put in operation by the means employed to raise it and let it fall to perform the cutting function, without which the machine would be of no value.

Tested by these considerations, it is clear that the decree of the Circuit Court is erroneous, even if the construction of the patent is that which the respondents assume it to be, as they do not contend that the claim for the cutter used by the complainants, as embodied in the first claim of their patent, is invalid.

The decree will be reversed, and the cause remanded with directions to enter a decree in favor of the complainants, and for further proceedings in conformity with the opinion of this court; and it is

So ordered.

ELIZABETH v. PAVEMENT COMPANY.

1. A foreign patent or publication describing an invention, unless published anterior to the making of the invention or discovery secured by letters-patent issued by the United States, is no defence to a suit upon them.
2. The presumption arising from the oath of the applicant that he believes himself to be the first inventor or discoverer of the thing for which he seeks letters-patent remains until the contrary is proved.
3. The use of an invention by the inventor, or by persons under his direction, if made in good faith, solely in order to test its qualities, remedy its defects, and bring it to perfection, is not, although others thereby derive a knowledge of it, a public use of it, within the meaning of the patent law, and does not preclude him from obtaining letters-patent therefor.
4. Samuel Nicholson having, in 1847, invented a new and useful improvement in wooden pavements, and filed in the Patent Office a *caveat* of his invention, put down in 1854, as an experiment, his wooden pavement on a street in Boston, where it was exposed to public view and travelled over for several years, and it proving successful, he, Aug. 7, 1854, obtained letters-patent therefor. *Held*, 1. That there having been no public use or sale of the invention, he was entitled to such letters-patent. 2. That they were not avoided by English letters-patent for the same invention, enrolled in 1850.

5. Where contractors laid a pavement for a city, which infringed the patent of Nicholson, and the city paid them as much therefor as it would have had to pay him had he done the work, thus realizing no profits from the infringement, — *Held*, that in a suit in equity, to recover profits, against the city and the contractors, the latter alone are responsible, although the former might have been enjoined before the completion of the work, and perhaps would have been liable in an action for damages.
6. Where profits are made by an infringer by the use of an article patented as an entirety or product, he is responsible to the patentee for them, unless he can show — and the burden is on him to show it — that a portion of them is the result of some other thing used by him.
7. No stipulations between a patentee and his assignee, as to royalty to be charged, can prevent the latter from recovering from an infringer the whole profits realized by reason of the infringement.

APPEAL from the Circuit Court of the United States for the District of New Jersey.

The facts are stated in the opinion of the court.

Mr. A. Q. Keasbey and *Mr. Charles F. Blake* for the appellants.

Mr. Clarence A. Seward and *Mr. B. Williamson, contra.*

MR. JUSTICE BRADLEY delivered the opinion of the court.

This suit was brought by the American Nicholson Pavement Company against the city of Elizabeth, N. J., George W. Tubbs, and the New Jersey Wood-Paving Company, a corporation of New Jersey, upon a patent issued to Samuel Nicholson, dated Aug. 20, 1867, for a new and improved wooden pavement, being a second reissue of a patent issued to said Nicholson Aug. 8, 1854. The reissued patent was extended in 1868 for a further term of seven years. A copy of it is appended to the bill; and, in the specification, it is declared that the nature and object of the invention consists in providing a process or mode of constructing wooden block pavements upon a foundation along a street or roadway with facility, cheapness, and accuracy, and also in the creation and construction of such a wooden pavement as shall be comparatively permanent and durable, by so uniting and combining all its parts, both superstructure and foundation, as to provide against the slipping of the horses' feet, against noise, against unequal wear, and against rot and consequent sinking away from below. Two plans of making this pavement are specified. Both require a proper

foundation on which to lay the blocks, consisting of tarred-paper or hydraulic cement covering the surface of the road-bed to the depth of about two inches, or of a flooring of boards or plank, also covered with tar, or other preventive of moisture. On this foundation, one plan is to set square blocks on end arranged like a checker-board, the alternate rows being shorter than the others, so as to leave narrow grooves or channel-ways to be filled with small broken stone or gravel, and then pouring over the whole melted tar or pitch, whereby the cavities are all filled and cemented together. The other plan is, to arrange the blocks in rows transversely across the street, separated a small space (of about an inch) by strips of board at the bottom, which serve to keep the blocks at a uniform distance apart, and then filling these spaces with the same material as before. The blocks forming the pavement are about eight inches high. The alternate rows of short blocks in the first plan and the strips of board in the second plan should not be higher than four inches. The patent has four claims, the first two of which, which are the only ones in question, are as follows: —

"I claim as an improvement in the art of constructing pavements:

"1. Placing a continuous foundation or support, as above described, directly upon the roadway; then arranging thereon a series of blocks, having parallel sides, endwise, in rows, so as to leave a continuous narrow groove or channel-way between each row, and then filling said grooves or channel-ways with broken stone, gravel, and tar, or other like materials.

"2. I claim the formation of a pavement by laying a foundation directly upon the roadway, substantially as described, and then employing two sets of blocks: one a principal set of blocks, that shall form the wooden surface of the pavement when completed, and an auxiliary set of blocks or strips of board, which shall form no part of the surface of the pavement, but determine the width of the groove between the principal blocks, and also the filling of said groove, when so formed between the principal blocks, with broken stone, gravel, and tar, or other like material."

The bill charges that the defendants infringed this patent by laying down wooden pavements in the city of Elizabeth, N. J.,

constructed in substantial conformity with the process patented, and prays an account of profits, and an injunction.

The defendants answered in due course, admitting that they had constructed, and were still constructing, wooden pavements in Elizabeth, but alleging that they were constructed in accordance with a patent granted to John W. Brocklebank and Charles Trainer, dated Jan. 12, 1869, and denied that it infringed upon the complainant.

They also denied that there was any novelty in the alleged invention of Nicholson, and specified a number of English and other patents which exhibited, as they claimed, every substantial and material part thereof which was claimed as new.

They also averred that the alleged invention of Nicholson was in public use, with his consent and allowance, for six years before he applied for a patent, on a certain avenue in Boston called the Mill-dam; and contended that said public use worked an abandonment of the pretended invention.

These several issues, together with the question of profits, and liability on the part of the several defendants to respond thereto, are the subjects in controversy before us.

We do not think that the defence of want of novelty has been successfully made out. Nicholson's invention dates back as early as 1847 or 1848. He filed a *caveat* in the Patent Office, in August, 1847, in which the checker-board pavement is fully described; and he constructed a small patch of pavement of both kinds, by way of experiment, in June or July, 1848, in a street near Boston, which comprised all the peculiarities afterwards described in his patent; and the experiment was a successful one. Before that period, we do not discover in any of the forms of pavements adduced as anticipations of his, any one that sufficiently resembles it to deprive him of the claim to its invention. As claimed by him, it is a combination of different parts or elements, consisting, as the appellant's counsel, with sufficient accuracy for the purposes of this case, enumerates them, 1st, of the foundation prepared to exclude moisture from beneath; 2d, the parallel-sided blocks; 3d, the strips between these blocks, to keep them at a uniform distance and to create a space to be filled with gravel and tar; and, 4th, the filling. Though it may be true that every one of these ele-

ments had been employed before, in one kind of pavement or another, yet they had never been used in the same combination and put together in the same manner as Nicholson combined and arranged them, so as to make a pavement like his. The one which makes the nearest approach to it, and might, perhaps, be deemed sufficiently like to deprive Nicholson of the merit of invention, is that of John Hosking, which, in one form, consisted of alternate rows of short and long blocks, the latter partially resting on the former by their being mutually rabbeted so as to fit together. The spaces thus formed between the longer blocks, and on the top of the shorter ones, were filled with loose stone and cement or asphalt, substantially the same as in Nicholson's pavement. It would be very difficult to sustain Nicholson's patent if Hosking's stood in his way. But the only evidence of the invention of the latter is derived from an English patent, the specification of which was not enrolled until March, 1850, nearly two years after Nicholson had put his pavement down in its completed form, by way of experiment, in Boston. A foreign patent, or other foreign printed publication describing an invention, is no defence to a suit upon a patent of the United States, unless published anterior to the making of the invention or discovery secured by the latter, provided that the American patentee, at the time of making application for his patent, believed himself to be the first inventor or discoverer of the thing patented. He is obliged to make oath to such belief when he applies for his patent; and it will be presumed that such was his belief, until the contrary is proven. That was the law as it stood when Nicholson obtained his original patent, and it is the law still. Act of 1836, sects. 7, 15; Act of 1870, sects. 24, 25, 61; Rev. Stat., sects. 4886, 4887, 4920; and see Curtis, Patents, sects. 375, 375 *a*. Since nothing appears to show that Nicholson had any knowledge of Hosking's invention or patent prior to his application for a patent in March, 1854, and since the evidence is very full to the effect that he had made his invention as early as 1848, the patent of Hosking cannot avail the defence in this suit.

It is unnecessary to make an elaborate examination of the other patents which were referred to for the purpose of showing

an anticipation of Nicholson's invention. They are mostly English patents, and we will only advert in a summary way to such of them as seem to be most nearly relevant to the question in controversy, premising that in England the enrolment of the specification is the first publication of the particulars of a patented invention.

Stead's patent, enrolled in November, 1838, shows a plan of pavement consisting of a series of hexagonal, triangular, or square-sided blocks, standing close together on the surface of the roadway, in a layer of sand, and being a little smaller at the bottom than at the top, so as to admit a packing of sand, or pitch and sand, in the interstices between them, below the surface. Small recesses at the top, around the edges of the blocks, are suggested, apparently for giving a better hold to the horses' feet. It had no prepared foundation like Nicholson's, and no spaces filled with gravel, &c.

Parkins's patent, enrolled October, 1839, proposes a pavement to consist of blocks leaning upon each other, and connected together with a mixture of sand and bitumen, and connected by keys laid in grooves, and having grooves cut in the surface, either across the blocks or along their edges, to give the horses a better foothold. This plan exhibits no spaces to be filled with gravel or other filling.

Wood's patent, enrolled in April, 1841, shows a pavement made of adjoining blocks fitted together, but alternately larger and smaller at the top, like the frustrum of a pyramid, and not parallel-sided; those larger at the top standing slightly higher than the others, so that when pounded down, or pressed by rollers or loaded vehicles, they would act as wedges, binding the whole pavement more tightly together. No filling is used on the surface, and no prepared foundation is suggested. In one form of his pavement he describes continuous grooves, the grooves being formed of blocks which are shorter than the others; and states that the groove is to be filled with concrete, coal-tar, &c., mixed with gravel or sand: but there is no foundation described for the pavement; and the description given for laying down the pavement, viz. by ramming down the taller blocks after considerable surface has been covered by the pavement, shows that the road-bed on which the blocks

are to be laid is to be a yielding one, capable of conforming itself to the under surface of the blocks in the same way as sand does to the ordinary stone pavement when the stones are rammed.

Perring's patent, enrolled January, 1843, shows a pavement consisting, in one form, of blocks leaning one upon another in rows, with strips of board between the rows, coming to within an inch or so of the top of the pavement, and the same distance from the bottom, leaving gutters for the water underneath, and the adjoining rows being connected with pins passing through the strips of board. The rows are thus separated to enable the horses' feet to get a better hold. No filling is suggested, and, indeed, would not be admissible, as the boards have no support but the pins; and no prepared foundation is required.

Crannis & Kemp's patent, enrolled Aug. 21, 1843, presents, amongst other things, first, a pavement consisting of rows of blocks adjoining each other, but each block having a small recess on one side, on the surface, to enable the horses to get a better foothold; secondly, a pavement of alternate blocks adjoining each other, but differing in width, and slightly differing in height, the top of one block being rounded off so as to make a groove next to the adjoining blocks, and the rounded blocks in one row alternating with the rectangular-topped blocks in the next row, the object of rounding off the alternate blocks being to give a foothold to the horses. This pavement is to be built on a flooring of plank, either of one or two thicknesses, but without any preparation to exclude moisture, and it has no filling in the depressions or grooves formed by rounding the alternate blocks.

A French patent, granted to Hediard in 1842, shows a pavement constructed of rows of blocks laid on a board foundation, cemented together by a thin filling (four-tenths of an inch thick) of cement or mastic, from top to bottom; no provision being made to prevent the accession of moisture from the ground below, and no strips between the rows to keep them separate from each other.

None of these pavements combine all the elements of Nicholson's, much less a combination of those elements arranged and disposed according to his plan. We think they present

no ground for invalidating his patent, and no defence to this suit.

The next question to be considered is, whether Nicholson's invention was in public use or on sale, with his consent and allowance, for more than two years prior to his application for a patent, within the meaning of the sixth, seventh, and fifteenth sections of the act of 1836, as qualified by the seventh section of the act of 1839, which were the acts in force in 1854, when he obtained his patent. It is contended by the appellants that the pavement which Nicholson put down by way of experiment, on Mill-dam Avenue in Boston, in 1848, was publicly used for the space of six years before his application for a patent, and that this was a public use within the meaning of the law.

To determine this question, it is necessary to examine the circumstances under which this pavement was put down, and the object and purpose that Nicholson had in view. It is perfectly clear from the evidence that he did not intend to abandon his right to a patent. He had filed a *caveat* in August, 1847, and he constructed the pavement in question by way of experiment, for the purpose of testing its qualities. The road in which it was put down, though a public road, belonged to the Boston and Roxbury Mill Corporation, which received toll for its use; and Nicholson was a stockholder and treasurer of the corporation. The pavement in question was about seventy-five feet in length, and was laid adjoining to the toll-gate and in front of the toll-house. It was constructed by Nicholson at his own expense, and was placed by him where it was, in order to see the effect upon it of heavily loaded wagons, and of varied and constant use; and also to ascertain its durability, and liability to decay. Joseph L. Lang, who was toll-collector for many years, commencing in 1849, familiar with the road before that time, and with this pavement from the time of its origin, testified as follows: "Mr. Nicholson was there almost daily, and when he came he would examine the pavement, would often walk over it, cane in hand, striking it with his cane, and making particular examination of its condition. He asked me very often how people liked it, and asked me a great many questions about it. I have heard him say a number of times that this was his first experiment with this pavement, and he

thought that it was wearing very well. The circumstances that made this locality desirable for the purpose of obtaining a satisfactory test of the durability and value of the pavement were: that there would be a better chance to lay it there; he would have more room and a better chance than in the city; and, besides, it was a place where most everybody went over it, rich and poor. It was a great thoroughfare out of Boston. It was frequently travelled by teams having a load of five or six tons, and some larger. As these teams usually stopped at the toll-house, and started again, the stopping and starting would make as severe a trial to the pavement as it could be put to."

This evidence is corroborated by that of several other witnesses in the cause; the result of the whole being that Nicholson merely intended this piece of pavement as an experiment, to test its usefulness and durability. Was this a public use, within the meaning of the law?

An abandonment of an invention to the public may be evinced by the conduct of the inventor at any time, even within the two years named in the law. The effect of the law is, that no such consequence will necessarily follow from the invention being in public use or on sale, with the inventor's consent and allowance, at any time within two years before his application; but that, if the invention is in public use or on sale prior to that time, it will be conclusive evidence of abandonment, and the patent will be void.

But, in this case, it becomes important to inquire what is such a public use as will have the effect referred to. That the use of the pavement in question was public in one sense cannot be disputed. But can it be said that the invention was in public use? The use of an invention by the inventor himself, or of any other person under his direction, by way of experiment, and in order to bring the invention to perfection, has never been regarded as such a use. Curtis, Patents, sect. 381; *Shaw* v. *Cooper*, 7 Pet. 292.

Now, the nature of a street pavement is such that it cannot be experimented upon satisfactorily except on a highway, which is always public.

When the subject of invention is a machine, it may be tested and tried in a building, either with or without closed doors.

In either case, such use is not a public use, within the meaning of the statute, so long as the inventor is engaged, in good faith, in testing its operation. He may see cause to alter it and improve it, or not. His experiments will reveal the fact whether any and what alterations may be necessary. If durability is one of the qualities to be attained, a long period, perhaps years, may be necessary to enable the inventor to discover whether his purpose is accomplished. And though, during all that period, he may not find that any changes are necessary, yet he may be justly said to be using his machine only by way of experiment; and no one would say that such a use, pursued with a *bona fide* intent of testing the qualities of the machine, would be a public use, within the meaning of the statute. So long as he does not voluntarily allow others to make it and use it, and so long as it is not on sale for general use, he keeps the invention under his own control, and does not lose his title to a patent.

It would not be necessary, in such a case, that the machine should be put up and used only in the inventor's own shop or premises. He may have it put up and used in the premises of another, and the use may inure to the benefit of the owner of the establishment. Still, if used under the surveillance of the inventor, and for the purpose of enabling him to test the machine, and ascertain whether it will answer the purpose intended, and make such alterations and improvements as experience demonstrates to be necessary, it will still be a mere experimental use, and not a public use, within the meaning of the statute.

Whilst the supposed machine is in such experimental use, the public may be incidentally deriving a benefit from it. If it be a grist-mill, or a carding-machine, customers from the surrounding country may enjoy the use of it by having their grain made into flour, or their wool into rolls, and still it will not be in public use, within the meaning of the law.

But if the inventor allows his machine to be used by other persons generally, either with or without compensation, or if it is, with his consent, put on sale for such use, then it will be in public use and on public sale, within the meaning of the law.

If, now, we apply the same principles to this case, the analogy will be seen at once. Nicholson wished to experiment on his pavement. He believed it to be a good thing, but he was not sure; and the only mode in which he could test it was to place a specimen of it in a public roadway. He did this at his own expense, and with the consent of the owners of the road. Durability was one of the qualities to be attained. He wanted to know whether his pavement would stand, and whether it would resist decay. Its character for durability could not be ascertained without its being subjected to use for a considerable time. He subjected it to such use, in good faith, for the simple purpose of ascertaining whether it was what he claimed it to be. Did he do any thing more than the inventor of the supposed machine might do, in testing his invention? The public had the incidental use of the pavement, it is true; but was the invention in public use, within the meaning of the statute? We think not. The proprietors of the road alone used the invention, and used it at Nicholson's request, by way of experiment. The only way in which they could use it was by allowing the public to pass over the pavement.

Had the city of Boston, or other parties, used the invention, by laying down the pavement in other streets and places, with Nicholson's consent and allowance, then, indeed, the invention itself would have been in public use, within the meaning of the law; but this was not the case. Nicholson did not sell it, nor allow others to use it or sell it. He did not let it go beyond his control. He did nothing that indicated any intent to do so. He kept it under his own eyes, and never for a moment abandoned the intent to obtain a patent for it.

In this connection, it is proper to make another remark. It is not a public knowledge of his invention that precludes the inventor from obtaining a patent for it, but a public use or sale of it. In England, formerly, as well as under our Patent Act of 1793, if an inventor did not keep his invention secret, if a knowledge of it became public before his application for a patent, he could not obtain one. To be patentable, an invention must not have been known or used before the application; but this has not been the law of this country since the passage of the act of 1836, and it has been very much qualified in Eng-

land. *Lewis* v. *Marling*, 10 B. & C. 22. Therefore, if it were true that during the whole period in which the pavement was used, the public knew how it was constructed, it would make no difference in the result.

It is sometimes said that an inventor acquires an undue advantage over the public by delaying to take out a patent, inasmuch as he thereby preserves the monopoly to himself for a longer period than is allowed by the policy of the law; but this cannot be said with justice when the delay is occasioned by a *bona fide* effort to bring his invention to perfection, or to ascertain whether it will answer the purpose intended. His monopoly only continues for the allotted period, in any event; and it is the interest of the public, as well as himself, that the invention should be perfect and properly tested, before a patent is granted for it. Any attempt to use it for a profit, and not by way of experiment, for a longer period than two years before the application, would deprive the inventor of his right to a patent.

The next question for consideration is, whether the defendants have infringed the patent of Nicholson. On this question we entertain no doubt. The pavement put down by the defendants in the city of Elizabeth differs in nothing from that described by Nicholson in his patent, except in the form of the strips placed between the rows of blocks, and the nicks or grooves made in the blocks to fit them. In Nicholson's description, they are simply strips of board standing endwise on the foundation. The patent describes the strips as "so arranged as to form spaces of about one inch in thickness between the rows of principal blocks. The auxiliary strip may be about half the height of the principal block; but it must not be permitted to fill up the grooves permanently and entirely, when the pavement is completed, or to perform any part of the pavement." The strips used by the defendants are substantially the same as here described, and perform the same office. The only difference in their construction and application between the blocks is, that they are bevelled, by being made wider at the top than at the bottom, — the extra width of the top part being let into a notch or groove in the blocks. If they perform the additional office, of partially sustaining the

pressure of the blocks and locking them together, they do not any the less perform the office assigned to them in Nicholson's pavement. Their peculiar form and application may constitute an improvement on his pavement, but it includes his.

It is objected, that the blocks of the Elizabeth pavement have not parallel sides, as prescribed in Nicholson's patent, by reason of the notch or groove in the side, into which the strips are fitted; but this notch or groove does not take from the blocks their general conformity to the requisition of the patent. They are parallel-sided blocks, with a groove made in the lower part to receive the edges of the strips. The parallel-sided blocks described in Nicholson's patent were probably intended to distinguish them from such blocks as those described in Stead's patent, which were hexagonal and triangular in form; or those in Wood's patent, which were of a pyramidal shape, the opposite sides being at an angle with each other. As contradistinguished from these, both the Nicholson blocks and those used by the appellants are properly denominated blocks with parallel sides.

The next subject for consideration is the form and principles of the decree rendered by the court below. The bill prayed a decree for damages and profits; but, as it was filed before the passage of the act of July 8, 1870, which first authorized courts of equity to allow damages in addition to profits, the court below correctly held that a decree for profits alone could be rendered. It is unnecessary here to enter into the general question of profits recoverable in equity by a patentee. The subject, as a whole, is surrounded with many difficulties, which the courts have not yet succeeded in overcoming. But one thing may be affirmed with reasonable confidence, that, if an infringer of a patent has realized no profit from the use of the invention, he cannot be called upon to respond for profits; the patentee, in such case, is left to his remedy for damages. It is also clear that a patentee is entitled to recover the profits that have been actually realized from the use of his invention, although, from other causes, the general business of the defendant, in which the invention is employed, may not have resulted in profits, — as where it is shown that the use of his invention produced a definite saving in the process of a manufacture. *Mowry* v. *Whit-*

ney, 14 Wall. 434; *Cawood Patent*, 94 U. S. 695. On the contrary, though the defendant's general business be ever so profitable, if the use of the invention has not contributed to the profits, none can be recovered. The same result would seem to follow where it is impossible to show the profitable effect of using the invention upon the business results of the party infringing. It may be added, that, where no profits are shown to have accrued, a court of equity cannot give a decree for profits, by way of damages, or as a punishment for the infringement. *Livingston* v. *Woodworth*, 15 How. 559. But when the entire profit of a business or undertaking results from the use of the invention, the patentee will be entitled to recover the entire profits, if he elects that remedy. And in such a case, the defendant will not be allowed to diminish the show of profits by putting in unconscionable claims for personal services or other inequitable deductions. *Rubber Company* v. *Goodyear*, 9 Wall. 788. These general propositions will hardly admit of dispute; and they will furnish us some guide in deciding the questions raised in this case.

Only the defendants have appealed; and the errors assigned by them on this branch of the case are the following:—

1st, "The court erred in decreeing that the complainants do recover of the defendants, the city of Elizabeth and George W. Tubbs, the sums set forth in the decree, because the master did not find that said defendants had made any profits, which failure to find was not excepted to by complainants, and because no proof was offered by complainants of any profits whatever made by said defendants."

2d, "The court erred in finding that the profits received by the defendants were the fruits of the use of the devices described and claimed in the first and second claims of the Nicholson patent,—there being no proof of any advantage derived by the defendants from such use of the Nicholson devices,—or was incident to the use of the devices of the Brocklebank & Trainer patent. The failure to specifically show such profits makes the recovery nominal."

3d, "The court erred in decreeing the whole amount of profits made by the New Jersey Wood-Paving Company in the construction of the pavements referred to in the master's

report. Whereas, if any profits ought to have been decreed, they should have been confined to the amount of the license for a royalty which the complainants had been accustomed to receive, and were bound by the terms of their title to accept, from any party constructing such pavement in New Jersey."

We will consider these assignments in order.

The first seems to be well taken. The party who made the profit by the construction of the pavement in question was the New Jersey Wood-Paving Company. The city of Elizabeth made no profit at all. It paid the same for putting down the pavement in question that it was paying to the defendant in error for putting down the Nicholson pavement proper; namely, $4.50 per square yard. It made itself liable to damages, undoubtedly, for using the patented pavement of Nicholson; but damages are not sought, or, at least, are not recoverable, in this suit. Profits only, as such, can be recovered therein. The very first evidence which the appellees offered before the master was, the contracts made between the city and the other defendants for the construction of the pavement; and these contracts show the fact that the city was to pay the price named, and that any benefit to be derived from the construction of the pavement was to be enjoyed by the contractors.

It is insisted that the defendants, by answering jointly, admitting that they were jointly co-operating in laying the pavement, precluded themselves from making this defence. We do not think so. That admission is not inconsistent with the actual facts of the case, to wit, that this co-operation consisted of a contract for having the pavement made, on one side, and a contract to make it, on the other; and is by no means conclusive as to which party realized profit from the transactions. The complainants themselves, by their own evidence, showed that the contractors and not the city realized it.

The appellant, Tubbs, is in the same predicament with the city. Several of the contracts were made in his name, it is true; but they were made in behalf of the New Jersey Wood-Paving Company, for whose use and benefit the contracts were made and completed. Tubbs only received a salary for his superintendence.

The next assignment of error, based on the hypothesis that the profits received by the defendants were not the fruits of the use of Nicholson's invention, appears to us destitute of foundation. This matter is so fully and ably presented in the opinion of the Circuit Court as to require but little discussion from us. The Nicholson pavement was a complete thing, consisting of a certain combination of elements. The defendants used it as such, — the whole of it. If they superadded the addition made to it by Brocklebank & Trainer, they failed to show that such addition contributed to the profits realized. The burden of proof was on them to do this. The evidence, if it shows any thing, tends to prove that the addition diminished the profits instead of increasing them; but it could not have had much influence either way, inasmuch as the evidence shows that the profit made on this pavement was about the same as that made on the pavement of Nicholson, without the improvement. The appellants, however, obtained an allowance of nearly $14,000 for the royalty paid by them for the use of the Brocklebank & Trainer patent. This allowance went so far in diminution of the profits recovered.

Equally without foundation is the position taken by the appellants, that other pavements, approaching in resemblance to that of Nicholson, were open to the public, and that the specific difference between those pavements and Nicholson's was small, and that, therefore, the Nicholson patent was entitled to only a small portion of the profits realized. Nicholson's pavement, as before said, was a complete combination in itself, differing from every other pavement. The parts were so correlated to each other, from bottom to top, that it required them all, put together as he put them, to make the complete whole, and to produce the desired result. The foundation impervious to moisture, the blocks arranged in rows, the narrow strips between them for the purposes designated, the filling over those strips, cemented together, as shown by the patent, — all were required. Thus combined and arranged, they made a new thing, like a new chemical compound. It was this thing, and not another, that the people wanted and required. It was this that the appellants used, and, by using, made their profit, and prevented the appellee from making it. It is not the case

of a profit derived from the construction of an old pavement together with a superadded profit derived from adding thereto an improvement made by Nicholson, but of an entire profit derived from the construction of his pavement as an entirety. A separation of distinct profit derived from Brocklebank & Trainer's improvement, if any such profit was made, might have been shown; but, as before stated, the appellants failed to show that any such distinct profit was realized.

We have looked over the various items claimed by the appellants by way of reduction of profits, and disallowed by the master and by the court below, and we are satisfied with the result which they reached. The gross profits of the work over actual expenses for material and labor were conceded to be $123,610.78. The total deductions claimed before the master amounted to $139,875.63, which would have been considerably more than sufficient to absorb the whole profits. The master and the court allowed deductions to the amount of $48,618.62, which reduced the profits to $74,992.16, for which amount the decree was rendered. The deductions overruled and disallowed amounted to $91,257.85. Of these, $31,111.92 was a profit of twenty per cent, which the appellants claimed they had a right to add to the actual cost of lumber and other materials and labor. It is only necessary to state the claim to show its preposterousness. Other items were one of $7,000 for salaries, and another of $3,000 for rent, for a period of time that occurred after the work was completed. Another item was one of $2,675.09 for the cost of a dock which the parties built on their own land; and another of $25,000, paid for an interest in the Brocklebank & Trainer patent. As the appellants still hold these properties, we cannot well conceive what the purchase of them has to do in this account. They also claim $15,241.33 for that amount abated from the assessments of some of their stockholders who owned lands along the streets paved. As this was a gratuity which they made to themselves, they cannot claim a deduction for it here. The last item was $6,572.75, claimed to have been profits made upon other work, which were allowed to be included in these contracts. As this is not explained in any satisfactory way, we think the master did right in rejecting it.

We are entirely satisfied with the disposition made of these various items, and with the correctness of the decree, so far as the statement of the account is concerned.

But the appellants assign a third error. They insist that the appellee, as assignor of the Nicholson patent for the State of New Jersey (which was the ground of its title), was entitled to recover only thirty-one cents per square yard in any event, — being limited to that charge for the use of the patent by the terms of the assignment; sixteen cents of which was to be paid to the proprietors, and fifteen to be retained by the appellee.

This matter is quite satisfactorily disposed of in the opinion of the court below. The stipulation was between third parties, and the appellants have no concern in it. It only applied, by its terms, to cases where, by reason of the decisions of the courts, or otherwise, it should be found impracticable for the appellees to obtain contracts for laying the pavement in any town or city, or where the work of constructing pavements should be required by law to be let under public lettings, open to general competition. The object was to secure as extensive a use of the pavement as possible, as thereby the emoluments of the proprietors would be increased. But the assignment gave to the appellee the exclusive right in the patent for the State of New Jersey. It did not prohibit the appellee from constructing the pavements itself, if it could obtain contracts for doing so, and making thereby any profit it could. There was no obstacle to its doing this in the city of Elizabeth. On the contrary, it did obtain from the city large contracts, and would have obtained more if the appellants had not interfered. There is nothing in this state of things which entitles the latter, after making large profits from the use of the invention, to refuse to respond therefor. It is not for them to say that the hands of the appellee are tied by its contract with its grantor. This would be to take advantage of their own wrong. Whatever bearing the stipulation in the assignment may have on the measure of damages, in an action at law, it affords no defence to the appellants when called upon to account for the profits which they have wrongfully made by pirating the invention.

We think there is no error in the decree of the Circuit Court, except in making the city of Elizabeth and George W. Tubbs

accountable for the profits. As to them a decree for injunction only to prevent them from constructing the pavement during the term of the patent, should have been rendered; which, of course, cannot now be made. As to the New Jersey Wood-Paving Company, the decree was in all respects correct. A decree for costs in the court below should be awarded against all the defendants.

The decree of the Circuit Court, therefore, must be reversed with costs, and the cause remanded to said court with instructions to enter a decree in conformity with this opinion; and it is

So ordered.

ALLIS v. INSURANCE COMPANY.

1. Where it can see that no harm resulted to the appellant, this court will not reverse a decree on account of an immaterial departure from the technical rules of proceeding.
2. The statute of Minnesota declares that, in the foreclosure of a mortgage by a proceeding in court, the debtor, after the confirmation of the sale, shall be allowed twelve months in which to redeem, by paying the amount bid at the sale, with interest. Where, in a foreclosure suit, a decree, passed by a court of the United States sitting in that State, ordered the master, on making the sale, to deliver to the purchaser a certificate that, unless the mortgaged premises were, within twelve months after the sale, redeemed, by payment of the sum bid, with interest, he would be entitled to a deed, and should be let into possession upon producing the master's deed and a certified copy of the order of the court confirming the report of the sale, — *Held*, that the decree gave substantial effect to the equity of redemption secured by the statute.

APPEAL from the Circuit Court of the United States for the District of Minnesota.

The facts are stated in the opinion of the court.

Mr. H. J. Horn for the appellant.

Mr. L. S. Dixon, contra.

MR. JUSTICE MILLER delivered the opinion of the court.

This is an appeal from a decree of the Circuit Court for the District of Minnesota, ordering a sale of land in a proceeding to foreclose a mortgage. The appellant, who was defendant

below, entered his appearance in due time, but default was taken for want of answer, and a decree *pro confesso* rendered. The case was then referred to a master, to ascertain the sum due, and report a decree. This reference, and his report a few days after, and the decree now complained of, were all made during the same term of the court, and no exceptions were taken to the report.

We are asked to reverse the decree and send the case back, because it does not appear that the appellant had notice of the time of the sitting of the master, or of the filing of his report. It is sufficient to say that the reference to the master was wholly unnecessary, as he had nothing to do but compute the sum due on the face of the papers, which the court ought to have done by itself, or by the clerk, or by the complainant's counsel. The papers are all now in this record, and there is no pretence of any mistake or wrong in these matters done to the appellant.

This court will not reverse a decree in chancery for an immaterial departure from the technical rules, when it can see that no harm resulted to the appellant.

But the assignment of errors attempts to raise the question which we considered in *Brine* v. *Insurance Company* (96 U. S. 627); namely, that the time given by the statutes of Minnesota for redemption after sale is disregarded by this decree.

The Minnesota statutes declare, that, in a foreclosure of a mortgage, by a proceeding in court, there shall be allowed to the debtor twelve months after the confirmation of the sale in which he may redeem, by paying the amount of the sale with interest.

The decree of the court in this case orders the master, on making the sale, to deliver to the purchaser a certificate that unless the property is redeemed within twelve months after the sale, by payment of the sum bid, with interest, he will be entitled to a deed.

And it proceeds to say that, unless the land be so redeemed within the twelve months, the purchaser shall be let into the possession upon the production of the deed of said master, and a certified copy of the order confirming the report of the sale.

It would seem probable from this that the court intends to defer the order confirming the sale until the time for redemption has expired, and that the report of the sale and the deed of the master will then be confirmed in one order. There does not seem to be any objection to this practice, as there will be no occasion to confirm the sale if the land is redeemed; and if it is not, the court can confirm the sale and approve the deed by the same final order.

We have, in the case above referred to, expressed the view that, if the courts of the United States give substantial effect to the right of redemption secured by the statute, they are at liberty in so doing to adhere to their own modes of proceeding. We think this has been done in the present case. The substantial right is to have a year to redeem. In the State courts, where the practice undoubtedly is to report the sale at once for confirmation, the time begins to run from that confirmation. But if in the Federal court the practice is to make the final confirmation and deed at the same time, it is a necessity that the time allowed for redemption shall precede the deed and confirmation. There is here a substantial recognition of the right to redeem within the twelve months, and we do not think there is any error for which the decree should be reversed.

Decree affirmed

WALLACE v. LOOMIS.

1. The provision in the Constitution of Alabama, which declares that "corporations may be formed under general laws, but shall not be created by special acts, except for municipal purposes," does not prohibit the legislature from passing a special act changing the name of an existing railroad corporation, and giving it power to purchase additional property.
2. A party is estopped from denying the corporate existence of a company when, by holding its bonds, he acquires a *locus standi* in the suit brought to foreclose the mortgage made to secure their payment.
3. The sale of a bankrupt's property under proceedings in involuntary bankruptcy cannot be invalidated by the fact that he, before their commencement, had promised to pay in full his debt to a creditor who, at his instance, instituted them.
4. The act of Congress approved March 2, 1809 (2 Stat. 534), provides that, in case of the disability of a judge of the District Court of the United States to perform the duties of his office, such duties shall be performed by the

justice of the Supreme Court allotted to the circuit which embraces the district. By the second section of the act approved April 10, 1869 (16 id. 44), the same power is conferred upon the circuit judge.

5. Where bonds of a corporation, as prepared for issue and sale, promise payment in lawful money, and, as such, were guaranteed by a State, a stipulation that they shall be paid in coin, subsequently indorsed on them by the corporation, in accordance with the requirement of purchasers from it, is supplementary and subsidiary, and binds only the corporation itself.

6. A court of equity having jurisdiction of the subject-matter and the parties, when it takes charge of a railroad and its appurtenances, as a trust fund for the payment of incumbrances, has power to appoint managing receivers of the property, and, for its preservation and management, authorize moneys to be raised, and declare the same chargeable as a paramount lien on the fund.

APPEAL from the Circuit Court of the United States for the Southern District of Alabama.

The facts are stated in the opinion of the court.

Mr. John T. Morgan for the appellant.

Mr. Philip Phillips and *Mr. William A. Maury, contra.*

MR. JUSTICE BRADLEY delivered the opinion of the court.

This suit was instituted, by a bill in equity filed May 30, 1872, by Francis B. Loomis, John C. Stanton, and Daniel N. Stanton, trustees of what is known as the first mortgage of the Alabama and Chattanooga Railroad Company, for the purpose of procuring a foreclosure and sale of the mortgaged premises, being the railroad of said company, with its appurtenances and rolling-stock, situated in Tennessee, Georgia, Alabama, and Mississippi, but principally in Alabama. A further object of the bill was to remove the cloud from the title caused by the bankruptcy of said company, the seizure of its property by the governor of Alabama, and the sale thereof by the assignees in bankruptcy; also, to protect and preserve the property from waste and dilapidation until it could be applied to the satisfaction of the mortgage.

The bill stated that the mortgage in question was executed and delivered to the trustees, Dec. 19, 1868, and a copy of the same was annexed to the bill as an exhibit. It was further stated that, under the mortgage, the company issued a large number of bonds, each for $1,000, with interest at the rate of eight per cent per annum, payable in gold coin, semi-annually,

on the 1st of January and July in each year; it being provided in each bond that the amount should not exceed $16,000 per mile. A copy of one of these bonds, and of the indorsements thereon, was also annexed to the bill as an exhibit. The bill stated that the bonds were indorsed by the governor of the State of Alabama with the guaranty of the State; and the same fact is recited in the mortgage, referring to certain acts of the legislature of Alabama, passed in 1867 and 1868, which authorized the governor of the State to indorse and guarantee such bonds to the extent of $16,000 per mile of the road, upon certain conditions being performed by the company. The bond appended to the bill is in the usual form of such instruments, the principal and interest being payable in lawful money of the United States. The coupons are also in the usual form. The first indorsement on the bond is by the governor of Alabama, and recites the acts by virtue of which the indorsement was made, and declares that the State is liable for the payment of the principal and interest of the bond. A further indorsement is also made by the company, agreeing to pay the principal and interest in coined money of the United States; but no such agreement is referred to in the mortgage nor on the face of the bond.

The bill stated that the number of bonds issued and indorsed was five thousand two hundred, amounting to $5,200,000; and that they were all issued and disposed of to various persons, who claimed, by virtue thereof, a first lien on the road and property mortgaged. It then stated that the railroad company failed to pay the instalments of interest which became due on the 1st of January and July, 1871, and the 1st of January, 1872; and that, though the governor of the State had paid a large portion thereof, yet he refused to pay in any thing but currency (which was received by the bondholders under protest); and he also refused to pay the interest on a large number of the bonds, because the holders thereof did not present to him proof that they were *bona fide* purchasers of the bonds held by them, though in fact they were such purchasers. [By an amended and supplemental bill, filed July 6, 1872, it was stated that the instalment of interest which became due on the 1st of July, 1872, was not paid in any manner, but that pay-

ment thereof had been totally refused. It was further stated, and so appears by the mortgage, that, upon failure by the company to pay any instalment of interest for the space of three months, the trustees were authorized to take possession of and sell the road, and pay the whole amount of principal and interest from the proceeds of such sale.]

The original bill further stated that the governor of Alabama claimed the right, by virtue of the payments made by him, and the delinquency of the company, to seize the road and its appurtenances, and did seize the same, and placed the same in the possession of a receiver by him appointed, who attempted to operate the road in the States of Alabama and Mississippi, but by his neglect and mismanagement the property had become greatly injured and deteriorated.

The bill further stated that the governor of Alabama had also filed bills for the foreclosure and sale of the road and its equipments in the States of Alabama, Mississippi, Georgia, and Tennessee (in all of which States portions of the road were situated), and had procured the appointment of receivers in said States, who took possession of the said several portions of the road; and that the governor had also procured the company to be declared bankrupt in the District Court of the United States for the Middle District of Alabama, which court had appointed assignees in bankruptcy of said company; and that the said assignees had made a pretended sale of the property, at which sale the governor had purchased the same under the pretence of purchasing it for the State of Alabama. The bill charged that this was a mere pretence, and that the purchase was really made for the benefit of other parties. The bill also stated that the company was sued by many persons, and that, by reason of the multiplicity of suits, the property of the company would be greatly deteriorated and wasted, and the possession thereof by those entitled thereto would be greatly interfered with.

The bill further stated, that, by reason of the various conflicting claims set up to said railway and other property by the various receivers and assignees, each denying to the other authority to run, operate, or control the same, the said property was permitted to go to destruction, and was being injured

to the amount of $1,000 a day; and that the damage and injury already done to said property by said mismanagement exceeded $1,500,000; that the interest of the bondholders was being greatly impaired, and that the property had ceased to be sufficient security for their payment. Various other statements were made with regard to the rapid deterioration of the property, the clouds cast upon the title thereto by the various legal proceedings, &c., and prayed for the appointment of receivers with power to raise money to make necessary repairs, and to manage the property until it should be sold by order of the court.

The defendants to the original bill were the Alabama and Chattanooga Railroad Company, the trustees of the second mortgage, the receivers appointed by the State courts at the instance of the governor of Alabama, the assignees in bankruptcy, Governor Lindsay in his individual capacity, the receiver appointed by him, and one Caldwell, an officer who had advertised much of the loose property for sale.

The bill was first presented to the justice of the fifth circuit, at Galveston, in May, 1872; and an order was granted to show cause at the next Circuit Court, to be held at Mobile in June, why an injunction should not be granted and a receiver appointed. No hearing was had, however, at that term. Separate answers were filed by R. B. Lindsay, governor of Alabama, in his individual capacity, by Charles Walsh, the receiver appointed at the governor's instance by the State courts of Alabama and Mississippi, and by William T. Wofford, the receiver appointed at the same instance by the State court of Georgia. The governor vindicated the course he had taken, and repelled the charges of collusion made against him in the bill. Walsh did little more than disclaim any interest in the controversy; and Wofford detailed the circumstances of his appointment as receiver, and the manner in which he had endeavored to discharge his duties as such. Numerous affidavits were taken, and documents exhibited on the condition of the road, and on the various points that were made by the parties. Finally, by general agreement, application was again made to the justice of the circuit in August, 1872, for an injunction and the appointment of a receiver, and a large mass of affidavits and doc-

uments was produced, showing the necessity of immediate interposition of the court to save the property from absolute destruction. No opposition was now made to the appointment of receivers as asked by the bill, but the appointment was consented to by the governor of Alabama, and acquiesced in by all the parties. The complainants, by an amendment to their bill, withdrew all charges of improper conduct on the part of the governor and his agents. Arrangements had been made with him, by which all objections arising from the claims of the State to the possession of the road, to the proceedings in bankruptcy, and to the appointment of receivers by the State courts, were obviated, — it being agreed that the proceedings by which the latter had been appointed should be discontinued. Under these circumstances, an order for an injunction and the appointment of receivers was made on the twenty-sixth day of August, 1872. This order, amongst other things, recited as follows:—

"It appears, by the affidavits and proofs duly submitted and filed in this cause, that the property in question, to wit, the railroad and connecting works, and other property late of the Alabama and Chattanooga Railroad Company, which are embraced in and covered by the mortgage known as the first mortgage of said company, are rapidly deteriorating in value, and being wasted, scattered, and destroyed, whereby the security of the first-mortgage bondholders, and the interest of all other persons concerned in said property, are subject to great hazard and danger of entire sacrifice.

"And whereas the governor of Alabama, on behalf of said State, has purchased the said property at the sale thereof by the assignees in bankruptcy of the said company, for the purpose of protecting the interests of said State, as guarantor or indorser of $4,720,000 of said first-mortgage bonds, the indorsement of which has heretofore been recognized by the governor of Alabama as valid, or upon which he has heretofore paid interest, but it appears that the said State, as well as the said company, has failed to pay the full amount of interest due on said bonds;

"And whereas, in the present condition of said property, it is impossible, without great sacrifice, to dispose of the same in any manner; and whereas it has been proposed and agreed by the parties interested that all further opposition to the proceedings in bankruptcy against said company in the District Court for the Middle District of Alabama shall be withdrawn, and that the said

proceedings shall be affirmed; and that all other proceedings for the appointment of receivers in the several State and District courts shall be discontinued, so that the proceedings in this suit shall have full effect and operation without undue embarrassment, and that a receiver or receivers shall be appointed in this cause, to take charge of said property, and put the same into proper condition for its preservation and disposition, for the mutual benefit of all parties interested therein;

"And whereas, in view of all the evidence and admissions of the parties, the court is satisfied that a receiver or receivers ought to be appointed to take charge of the entire property and manage the same, and to put the same in order and repair, to prevent the entire destruction thereof."

The order then appointed three receivers, with power to take possession of the property and collect the debts and claims due to the company, and also with power to put the road and property in repair, and to complete any uncompleted portions thereof, and to procure rolling-stock, and to manage and operate the road to the best advantage, so as to prevent the property from further deteriorating, and to save and preserve the same for the benefit and interest of the first-mortgage bondholders, and all others having an interest therein. The order also provided that, to enable the receivers to perform the duty imposed upon them, they might raise money to an amount limited in the order, by loan, if necessary, upon certificates to be issued by them, which should be a first lien on the property.

Up to this point of time, Wallace, the present appellant, was not a party; but, as a holder of second-mortgage bonds, was, with the other holders of such bonds, represented in the suit and proceedings by the trustees of the second mortgage, who were defendants, and had due notice of, and acquiesced in, all that was done.

In February, 1873, by leave of the court, Wallace was made a defendant, and thereupon filed an answer and cross-bill, claiming to be the holder and owner of five second-mortgage bonds for $1,000 each. His answer was, in substance, as follows: He denied that the Alabama and Chattanooga Railroad Company was a corporate body, though admitting that there was a joint-stock company so called, and contending (as was necessary to

do in order to sustain his own claim) that the bonds and mortgages issued by it were valid and binding in equity as a lien on the property in question; he denied that all the first and second mortgage bonds were valid, contending that many of them were held *mala fide* and without consideration; he denied the validity of the bankrupt proceedings against the company, and the validity of the sale of the property by virtue thereof; he denied that the State was liable on the first-mortgage bonds, and that the governor of Alabama had any right to pay interest or to seize the road therefor; and affirmed that the trustees of the first and second mortgages had the superior right to take possession of said property, under the powers conferred in the mortgages.

It is difficult to see how the allegations of the answer, if true, could furnish any fair ground of defence to the bill. It rather corroborated the position of the complainants than otherwise, and furnished additional reasons for the relief which they asked. Indeed, the cross-bill, which was filed at the same time with the answer, and which amplified the averments thereof, prayed that the first and second mortgages might be sustained for the benefit of all *bona fide* owners of bonds issued under the same, and that the court would continue to hold the property in the hands of receivers, and would continue to direct and control them in the administration thereof; and that, when a sale of the property should become necessary and advantageous to all concerned, the proceeds be brought into court, and paid to the parties entitled thereto.

This hardly bears the aspect of opposition to the general object of the original bill; but, as the appellant objects to the decree for pronouncing against the positions taken in the answer, and has argued the subject with much earnestness, as a reason why the decree ought to be reversed, we will examine these positions before proceeding further.

First, The answer alleges that the Alabama and Chattanooga Railroad Company was not a corporate body, and the decree affirms the contrary. The cross-bill states at large the reason for the allegation of the answer. It is, that the company had its alleged corporate existence alone in virtue of a special act of the legislature of Alabama, passed the 17th of September,

1868, which act upon its face was a violation of the Constitution of the State, which declares that "corporations may be formed under general laws, but shall not be created by special act, except for municipal purposes." The act referred to is set out in full, as an exhibit to the cross-bill. It authorizes the Wills Valley Railroad Company (a pre-existing corporation) to purchase the railroad and franchises of the Northeast and Southwestern Alabama Railroad Company (another pre-existing corporation); and, after doing so, to change its own name to that of the Alabama and Chattanooga Railroad Company.

We are unable to see any thing in this legislation repugnant to the constitutional provision referred to. That provision cannot, surely, be construed to prohibit the legislature from changing the name of a corporation, or from giving it power to purchase additional property; and this was all that it did in this case. No new corporate powers or franchises were created.

The appellant, however, in his cross-bill alleges that fraud and collusion were practised in making the purchase of the Northeast and Southwestern Alabama Railroad, and that the proper steps were not taken to entitle the Wills Valley Railroad Company to assume the new name. It is admitted that the purchase was made and the name assumed; and it sufficiently appears throughout the record and by the laws of Alabama that the company always afterwards acted under the name so assumed, and was recognized thereby by all departments of the State government. The mortgage and bonds under and by virtue of which the appellant claims a standing in court were executed by the Alabama and Chattanooga Railroad Company as a corporation. The mortgage commences with the statement that it was made between the Alabama and Chattanooga Railroad Company, a corporation of the States of Alabama, Georgia, Mississippi, and Tennessee, party of the first part, and the trustees (naming them), party of the second part; and it then recites as follows: "Whereas, in pursuance and by virtue of an act of the legislature of the State of Alabama, approved Nov. 17, 1868, and entitled 'An Act relating to the Wills Valley Railroad Company and the Northeast and Southwestern Alabama Railroad Company,' said Wills Valley Railroad Company

has changed its name to the Alabama and Chattanooga Railroad Company." In view of these facts, we think that the appellant is estopped from denying the corporate existence of the company whose bonds he thus holds, and by virtue of which he acquires a *locus standi* in the suit. Irregularities and even fraud committed in making the purchase authorized by the act, and failure to perform strictly all the requisites for changing the company's name, cannot avail the appellant, occupying the position he does in this suit, to deny the corporate existence of the Alabama and Chattanooga Railroad Company. He waived all such objections when he took the bonds, and came into court only as a holder and owner thereof. The irregularities on which he relies might, perhaps, have been sufficient cause for a proceeding on the part of the State to deprive the company of its franchises, or on the part of third persons who may have been injuriously affected by the transactions. But neither the State nor any other persons have complained; and it is not competent for the appellant to raise the question in this collateral way, for the purpose of gaining some supposed advantage over other creditors of the same company, who have relied on its corporate existence in the same manner that he has done.

Secondly, The ground for impeaching the sale of the road by the assignees in bankruptcy is based on the supposed want of jurisdiction of the judge who made the order to show cause why the company should not be declared bankrupt, of the District Court which made the decree of bankruptcy, and the alleged want of notice to the second-mortgage bondholders, or their trustees, of the petition for an order of sale.

As to these proceedings (which are quite fully stated in the answer of Lindsay, one of the defendants), the appellant, in his cross-bill, admits that a petition of involuntary bankruptcy was filed against the Alabama and Chattanooga Railroad Company, in the District Court of the United States for the Middle District of Alabama, by one W. A. C. Jones; that a rule to show cause was made by Circuit Judge Woods; that the company was adjudged a bankrupt by default by the district judge; that Bailey, Gindrat, and S. B. Jones were appointed assignees; that they filed a petition in the District Court for the sale of the property; that the court granted

a rule to show cause thereon, and heard the same, and made an order of sale; and that the sale was made accordingly. The petition of the assignees, asking for an order to sell, the order to show cause why a sale should not be made, and the order of sale made thereon, are all set out in full by way of exhibits to the cross-bill. The assignees' report of sale, and the order confirming the same, had been previously filed in the cause by the complainants. With all this in the record, it is certainly difficult to see any lack of jurisdiction in the court to order the sale complained of; but the cross-bill alleges that these proceedings were irregular and void. Whether this be so, and whether it can be alleged in this collateral way, depends upon the character of the objections made to their validity. The objections made are as follows: —

First, That the company was not a legal corporation, and therefore the court had no jurisdiction to declare it bankrupt.

We have already considered this objection, and think it has no foundation in fact.

Secondly, That the proceedings were instigated by the governor of Alabama, on a pledge or promise to Jones, the petitioner, that his debt should be paid in full. We do not perceive how this fact, if true, can avoid the proceedings in bankruptcy. If the debtor should make such a promise or pledge, it would affect his discharge, but would not invalidate the proceedings. To give it that effect would operate to the injury of other creditors and purchasers interested in the bankruptcy proceedings.

Thirdly, It is alleged that Judge Woods had no authority to make the order to show cause; that he could not know, when he made it, that the district judge would not be present to conduct the proceedings. As the appellant has not set forth in full the order to show cause referred to, we must presume that the circuit judge acted according to law. He had full power to perform the duties of the district judge when the latter was disabled to perform them. The act of Congress of March 2, 1809 (2 Stat. 534), expressly authorized the justice of the circuit to do this, in case of the disability of the district judge to perform the duties of his office; and the act of April 10, 1869, which created the circuit judges, conferred upon them the same

power, in the circuits, as the justices of the Supreme Court had. 16 id. 44.

Fourthly, It is objected that no notice of the assignee's petition for a sale was given to the second-mortgage bondholders, or their trustees, although it requested a sale of the property free from the incumbrance of the second mortgage, and subject only to that of the first mortgage; but it appears from the petition itself, set forth as an exhibit to the cross-bill, that it had annexed to it a copy of both the first and second mortgages, and that it stated that the assignees were informed that there was a third mortgage; that it stated the number of bonds which had been issued under the second mortgage; that it stated and alleged that much the larger portion of the second-mortgage bonds which had been issued were in the hands of the corporators of the railroad company, without consideration or value; that the only holders and owners of said bonds known to the assignees were W. A. C. Jones (the petitioner in bankruptcy), James W. Sloss, and A. C. Hargrove, residents of Alabama, and that the others were not known to them, and that they believed they were citizens of other States, and beyond the jurisdiction of the court; that the original trustees named in the second mortgage had ceased to be such, and that, under a power in the mortgage, others had been appointed in their stead, — to wit, as the assignees had been informed, Seth Adams, Francis B. Loomis, and John C. Stanton, all residing in Boston, Mass. It appears further, that the order to show cause, made upon said petition, was directed to be served on the said substituted trustees, and also on the said Jones, Sloss, and Hargrove, ten days before the hearing thereon. The order of sale recites that it appeared to the satisfaction of the court that due service of the petition and order to show cause had been made for more than ten days prior thereto. Now, although the assignees were in error as to the names of the substituted trustees of the second mortgage, yet the service on a portion of the bondholders, whose interest was identical with that of the appellant and the other bondholders, and who were the only bondholders known to the assignees, would seem to be sufficient, under the circumstances, to give the court jurisdiction to make the order of sale. The assignees themselves represented all

creditors of every class; and if they deemed it advisable that the property should be sold, and that it ought to be sold subject only to the first mortgage, and gave notice of their application for an order of sale to all persons interested in the subsequent securities of whom they had any knowledge (such persons representing a real and substantial interest identical with that of the others who were not known), we think that the bankruptcy court had power to act upon the petition. The order of sale provided that abundant notice of the sale should be given, both in Alabama and elsewhere; and it is apparent, from the report of sale made by the assignees, that it was a notorious proceeding, the appellant himself attending the sale, by his attorney, and making sundry objections thereto. The defendant and other holders of second-mortgage bonds, if they had so desired, could have objected to the confirmation of sale, and it would then have been competent to them to question the sufficiency of notice and the jurisdiction of the court; but no such objections appear to have been made by them.

On the whole, we think that the objections to the jurisdiction of the District Court were not well taken, and that the sale was a valid one, even if it be a question whether, under the circumstances, it was so made as to cut off the second-mortgage bondholders.

But if the objections were valid, there is nothing, in reference to this matter, in the final decree of the court, which can materially injure the appellant. All the notice which the decree takes of the assignees' sale is to recite the facts of the proceedings in bankruptcy, and of the sale as it actually occurred. No order is made or judgment rendered in the decree which would preclude the appellant and other holders of second-mortgage bonds, in the proceedings to be instituted before the master for ascertaining the claims chargeable upon the property, from setting up their claim to any part of the surplus proceeds after satisfying the first-mortgage bondholders and the liens paramount thereto.

We have thus disposed of the principal grounds of defence taken by the appellant in his answer and cross-bill. His allegation that the State of Alabama was never liable on the indorsement made by its governor on the first-mortgage bonds,

and therefore had no right to take possession of the road, and is accountable for its proceeds whilst in the possession of its agent or receiver, and that those proceeds should be set off against its claim for interest paid, whether such allegation be well or ill founded, forms no objection to the decree made in the cause. There is nothing in the decree which affirms or disaffirms the rights of the State. Perhaps the very fact that this point was taken in the appellant's answer was the reason why the decree is silent on the subject. Whatever demands may exist in favor of or against the State remain unadjudicated, as they should be, unless the State had chosen voluntarily to submit itself to the jurisdiction of the court.

The final decree, from which the present appeal was taken, was made on the 23d of January, 1874; and it was thereby, in substance, declared, that the Alabama and Chattanooga Railroad Company was a corporation under the laws of Alabama, and that corporate privileges had been granted to it by the States of Tennessee, Mississippi, and Georgia; that the first mortgage and the bonds *bona fide* issued under it were a first lien on the property, except as therein afterwards stated; that the moneys raised by loan, or advanced by the receivers and expended on the road pursuant to their order of appointment, were a lien paramount to the first mortgage; and direction was given that it should be referred to a master to ascertain the true amount of said loan and of the bonds *bona fide* issued under the first mortgage, as well as other claims against the property. The decree further found and declared that the railroad company had been declared bankrupt by the District Court of the Middle District of Alabama, and that the said court had appointed assignees in bankruptcy; and that the said assignees, by virtue of an order of the court, had sold the railroad, and that the governor of Alabama had purchased the same on behalf of the State, subject only to the lien of the first mortgage. The decree then directed that the road and its appurtenances should be sold, as an entirety, by commissioners named for that purpose, with directions as to the manner of sale; and that, when sold, the company, and all parties claiming under it, should be barred and foreclosed of all claim thereto. It then decreed the application of the proceeds to arise from the sale,

as follows: *first*, to the payment of the trust and legal expenses; *second*, to the payment of taxes and other liens prior in law to the first mortgage, including the liabilities incurred, as aforesaid, by the receivers, and such receivers' certificates or other indebtedness as might thereafter be sanctioned or ordered to be paid by the court; *third*, to the payment of such first-mortgage bonds (with the interest thereon) as might be reported by the master to have been *bona fide* issued and yet unpaid; *fourth*, the residue, if any, to be subject to such order and priority in distribution as the court should thereafter establish and decree. It was further ordered that the master should ascertain and report the amount of said several classes of securities before the sale.

The appellant raises several objections to this decree in addition to those which have been already considered.

First, it is objected that it is variant from the relief sought by the bill. The principal gravamen of the bill, it is contended, was that the interest due on the bonds was not paid in gold; and the decree sought was, that the bondholders were entitled by the contract to be paid in gold coin. It is also alleged that the evidence was variant from the allegations of the bill in this respect. The bill alleged that the contract was to pay in coin, whereas the bonds, as shown by the exhibit annexed to the bill, were only payable in lawful money. It is argued, from the maxim that the *allegata* and the *probata* should agree, that this variance was fatal, and that the bill should have been dismissed.

It is true that the complainants do, in their bill, insist that the contract was to pay the principal and interest of the bonds in gold coin, and the point is strenuously urged as a ground for relief. But it cannot be justly said that this was the principal gravamen of the bill, or that the principal object of the bill was to establish that claim. Its main object was to secure the payment of the first-mortgage bonds (however payable), and to get possession of, and preserve from destruction, the fund out of which they were payable, and which, it was alleged, was fast being dissipated and destroyed. The leading facts on which this desired relief was based, and which were alleged and relied on, were the execution of the mortgage as a first lien on the

property, the issue of bonds secured thereby, the insolvency of the company and its failure to pay the interest, the refusal of the State to pay the interest in coin, and its refusal to pay the interest on a large number of bonds in any form, and the mismanagement and rapid deterioration and destruction of the property subject to the mortgage. These facts were all substantially admitted by the appellant in his answer and cross-bill, or clearly follow from facts which were admitted. The question about payment in coin was a subordinate one. The trustees saw the security of the bondholders fast disappearing before their eyes. They desired to save it in time, to rescue it from the hands of those who were mismanaging and dissipating it. They might be mistaken on the question of coin, but the default was sufficient without that to entitle them to the relief they sought. They asserted that view of the claim which was most favorable to the bondholders. This should not preclude them from relief if a less favorable view should be adopted by the court. The company had, in fact, by an indorsement on the bonds, agreed to pay in coin; but the court probably considered that this agreement was not binding on the State, nor on the subsequent incumbrancers, not being notified in the mortgage; and it only rendered a decree for payment in lawful money. Surely the second-mortgage bondholders cannot complain of this decision, which was in their favor; and we can see no such variance between the proofs and allegations as to render the decree technically erroneous. Whilst the complainants, in their bill, insisted that the agreement was to pay in coin, they spread the whole agreement upon the record, precisely as it was made, so that no one was misled by the form or manner of pleading. If the objection were a valid one, it might have been set up by way of demurrer, or it might have been made in the answer. But in neither of these ways did the appellant see fit to bring it to the notice of the court. We think that he cannot now complain of it as error in the decree.

The appellant argues further, however, that the indorsement by the company of an agreement to pay the bonds in coin had the effect of changing the contract as guaranteed by the State, and as entitled to priority over the second-mortgage bonds; and, therefore, that the bonds being thus changed in their legal

effect lost the benefit of the guaranty, and the priority to which they would otherwise have been entitled. This would, indeed, be a strange result. The bonds on their face, as prepared for issue and sale, promised payment in lawful money. As such, they were guaranteed by the State. As such, they were entitled to priority over the second-mortgage bonds. The purchasers required from the company the further stipulation that it should pay in coin. Such stipulation was clearly supplemental and subsidiary, affecting only the company itself. So long as it was not recognized by the court to the prejudice of the State, or of the holders of the second-mortgage bonds, it is difficult to see how the latter could be injured by it. They could be no more injured, in a legal point of view, than if a stipulation had been made for additional security. That it could not be enforced against the common fund, to the prejudice of the State or of the second-mortgage bondholders, is conceded by the court in its decree. And in this we see no error.

The only other material objection made by the appellant to the decree, not already disposed of, is, that it declared the amount due on the receivers' certificates to be a lien on the property in their hands prior to that of the first-mortgage bonds. The history of these certificates has already been referred to. The receivers were authorized by the order appointing them, amongst other things, to put the road in repair and operate the same, and to procure such rolling-stock as might be necessary; and, for these purposes, to raise money by loan to an amount named in the order, and issue their certificates of indebtedness therefor; and the order declared that such loan should be a first lien on the property, payable before the first-mortgage bonds. The power of a court of equity to appoint managing receivers of such property as a railroad, when taken under its charge as a trust fund for the payment of incumbrances, and to authorize such receivers to raise money necessary for the preservation and management of the property, and make the same chargeable as a lien thereon for its repayment, cannot, at this day, be seriously disputed. It is a part of that jurisdiction, always exercised by the court, by which it is its duty to protect and preserve the trust funds in its hands. It

is, undoubtedly, a power to be exercised with great caution; and, if possible, with the consent or acquiescence of the parties interested in the fund. In the present case, it appears that the parties most materially interested either expressly consented to the order, or offered no objection to it. The appellant complains that it was made without due notice to the second-mortgage bondholders. But this cannot propefly be alleged, inasmuch as the trustees of the second mortgage were parties to the suit, and had due notice of the application, and made no objection to its being granted. The bondholders were represented by their trustees, and must be regarded as bound by their acts, at least so far as concerns the power of the court to act, in making the order, and so far as the interest of third persons acting upon the faith of it might be affected. The appellant did not seek to be made a party to the suit until several months after the order was made; and, when he became a party and filed his answer and cross-bill, he prayed that the court would continue to hold the property by its receivers, and would continue to direct and control them in the administration thereof, without suggesting the slightest objection to the terms of the order by which the existing receivers had been appointed.

We see nothing in the case before us on which the appellant can ground any just exception, either to the original order which authorized the loan to be made, or to the decree which confirmed it and recognized such loan as a paramount lien on the fund.

Other objections of a subordinate character are made to the decree; but we are satisfied, from an examination of the grounds on which they rest, that they do not show any error therein.

Decree affirmed.

UNITED STATES v. NORTON.

1. The proclamation of the President of June 13, 1865 (13 Stat. 763), annulling, in the territory of the United States east of the Mississippi, all restrictions previously imposed upon internal, domestic, and coastwise intercourse and trade, and upon the removal of products of States theretofore declared in insurrection, took effect as of the beginning of that day.
2. There was, therefore, on that day, no authority, under the act of July 2, 1864 (13 Stat. 375), and the treasury regulations of May 9, 1865, for retaining from the owner of cotton shipped to New Orleans from Vicksburg, Miss., one-fourth thereof, nor for exacting from him a payment equal in value to such one-fourth.
3. *United States* v. *Lapeyre* (17 Wall. 191) reaffirmed.

APPEAL from the Court of Claims.

This is a suit by Emory E. Norton, assignee in bankruptcy of Samuel DeBow & Co., to recover $3,206.66, paid by that firm to the treasury agent at New Orleans, Louisiana, June 13, 1865, under the eighth section of the act of July 2, 1864 (13 Stat. 375), and the regulations of the Treasury Department, on account of certain cotton shipped from Vicksburg, Miss., to New Orleans.

Said section enacts: —

"That it shall be lawful for the Secretary of the Treasury, with the approval of the President, to authorize agents to purchase for the United States any products of States declared in insurrection, at such places therein as shall be designated by him, at such prices as shall be agreed on with the seller, not exceeding the market value thereof at the place of delivery, nor exceeding three-fourths of the market value thereof in the city of New York, at the latest quotations known to the agent purchasing," &c.

The regulations of May 9, 1865, for the purchase of the products of the insurrectionary States on government account, were approved by the President. They provide: —

"3. The operations of purchasing agents shall be confined to the single article of cotton; and they shall give public notice at the place to which they may be assigned that they will purchase, in accordance with these regulations, all cotton not captured or abandoned which may be brought to them.

"4. To meet the requirements of the eighth section of the act of July 2, 1864, the agents shall receive all cotton so brought, and forthwith return to the seller three-fourths thereof, which portion shall be an average grade of the whole, according to the certificate of a sworn expert or sampler.

"5. All cotton purchased and resold by purchasing agents shall be exempt from all fees and all internal taxes. And the agent selling shall mark the same 'free,' and furnish to the purchaser a bill of sale clearly and accurately describing the character and quantity sold, and containing a certificate that it is exempt from taxes and fees as above.

"6. Purchasing agents shall keep a full and accurate record of all their transactions, including the names of all persons from whom they make purchases, the date of the purchase, a description of the cotton purchased by them, and the quantity and quality thereof; also of the one-quarter retained by them. A transcript of this record will be transmitted to the Secretary of the Treasury on the first day of each month.

"7. Sales of the cotton retained by the purchasing agents under regulation 4, as the difference between three-fourths the market price and the full price thereof in the city of New York, may be made by such agents, at such places and times and in such manner as may be directed in special instructions from the Secretary of the Treasury. Where such sales are not so authorized, the agents shall, without delay, ship it to New York on the best terms possible, consigned, until otherwise directed, to S. Draper, cotton agent and disbursing officer at that place. Bills of lading in triplicate for such shipment must be taken, one of which shall be sent to the agent at New York, one to the Secretary of the Treasury, and one retained by the purchasing agent."

On the 13th of June, 1865, the President of the United States signed a proclamation. So much of it as relates to any question involved in this suit is as follows: —

"Now, therefore, be it known that I, Andrew Johnson, President of the United States, do hereby declare that all restrictions upon internal, domestic, and coastwise intercourse and trade, and upon the removal of products of States heretofore declared in insurrection, . . . heretofore imposed in the territory of the United States east of the Mississippi River, are annulled, and I do hereby direct that they be forthwith removed."

The court below found that, on the 12th of June, 1865, there arrived at New Orleans, on the steamer "Grey Eagle," from Vicksburg, one hundred and twenty-five bales of cotton, belonging to Samuel DeBow & Co.; at which time no shipments of cotton to New Orleans were allowed, except such as were consigned to the purchasing agent of the Treasury; that on the 13th of June, 1865, DeBow & Co. executed a bill of sale of all the cotton to that agent, at an expressed consideration of $9,625.98, and that the latter executed to them another bill of sale of all the cotton, at an expressed consideration of $12,834.64; that DeBow & Co. thereupon paid to said agent the difference, viz., $3,208.66, and received the cotton, — such interchanged bills of sale and payment being in fact one transaction, intended to be in compliance with the provisions of the act of July 2, 1864, and the treasury regulations thereunder of May 9, 1865, relating to the "purchase of products of the insurrectionary States on government account;" that the treasury agent reported said amount of $3,208.66 as being "twenty-five per cent retained on government account," and that it was duly accounted for by him, and paid into the treasury; that, when the sale and resale took place, neither DeBow & Co. nor the treasury agent had knowledge of the President's proclamation of June 13, 1865, annulling restrictions upon trade east of the Mississippi; that DeBow & Co. were duly adjudicated bankrupts, and Emory E. Norton was appointed their assignee.

The court thereupon found, as a conclusion of law, that "the treasury agent in New Orleans, having control and possession of the claimant's cotton brought in from the east bank of the Mississippi, had no authority, on the 13th of June, 1865, to retain the same, or one-fourth thereof, nor to exact from the owner a payment equivalent to one-fourth of its value, under the act of July 2, 1864 (13 Stat. 375); and the owners should recover back the money so exacted in payment, it having been paid over to the defendant, and being now in the treasury."

Judgment having been rendered in favor of the claimant, the United States appealed to this court.

The *Attorney-General* and *Mr. Smith*, Assistant-Attorney-General, for the appellant.

It matters not whether the payment was voluntary or

involuntary. If voluntary, it cannot be recovered in any court. *Elliott* v. *Swartwout*, 10 Pet. 137; *Cunningham* v. *Monroe*, 15 Gray (Mass.), 471; *Ellston* v. *Chicago*, 40 Ill. 518; *Mayor* v. *Lefferman*, 4 Gill (Md.), 436; *Fellows* v. *School District*, 39 Me. 561; *Benson* v. *Monroe*, 7 Cush. (Mass.) 125. That the payment, so far as any act upon the part of the treasury agent is concerned, was voluntary, is obvious. The cases cited by the appellee do not apply; for in each the party to whom the payment was made had either actual possession of the goods of the other party and refused to restore them, or an apparently legal process, under color of which he threatened to seize and detain them.

The payment of an illegal tax before the issue of process for its enforced collection is so far voluntary that it cannot be recovered. *Barrett* v. *Cambridge*, 10 Allen (Mass.), 48; *Forbes* v. *Appleton*, 5 Cush. (Mass.) 117; *Lee* v. *Templeton*, 13 Gray (Mass.), 476; *Walker* v. *Saint Louis*, 15 Mo. 563, and cases cited; *Christy* v. *Saint Louis*, 20 id. 148; *State* v. *Powell*, 44 id. 436; *Nickodemus* v. *East Saginaw*, 25 Mich. 458.

Even if the statute and the treasury regulations operated as a compulsion, they remained so no longer than they were in force. While in force, their compulsive effect was legal and proper. If, therefore, there was any misapprehension which led to the payment, it was a mistake of law. If the payment was involuntary, this suit to recover it must, if within the jurisdiction of the court below, be based upon some contract, express or implied, between the United States and the claimant. *Gibbons* v. *United States*, 8 Wall. 269; Rev. Stat., sect. 1059.

There was confessedly no express contract on the part of the United States to take cotton, sell it for the owner, and return him the proceeds. No officer had the right to make the government a cotton-factor for individuals, and there was no such attempt. Nor can such a contract be implied; for the law will not assume that aught was done which could not have been done by express contract, or where the circumstances repel all implication of a promise in fact. *Simpson* v. *Bowden*, 33 Me. 552; *Whiting* v. *Sullivan*, 7 Mass. 107; *Watson* v. *Stever*, 25 Mich. 386.

Non constat but that the act of Congress and the regulations

were in force at the moment when the payment was made to the agent.

Until the proclamation was signed, or delivered to the State Department, it was not merely his right, but his duty, to receive all cotton brought to him under existing law and regulations.

This is one of the cases in which it becomes the duty of the plaintiff to show, and of the court to determine, at what hour of the day a law becomes operative. *Gardner* v. *Collector*, 6 Wall. 499.

The approval, attested by the President's signing a bill, cannot look backwards, and by relation make that a law at any antecedent period of the same day which was not so before the approval. The law prescribes a rule for the future, not for the past. *Ex parte Richardson*, 2 Story, 580.

The rule that the law knows no fractions of a day is one of convenience merely. Where the ends of justice require it, or conflicting interests are involved, the law will look into the fractions of a day as readily as into those of any other unit of time. *Chick* v. *Smith*, 8 Dowl. Pr. Cas. 340; *Regina* v. *St. Mary*, 1 El. & Bl. 827; *Brainerd* v. *Bushnell*, 11 Conn. 24; *Lemon* v. *Staats*, 1 Cow. (N. Y.) 594; *Small* v. *McChesney*, 3 id. 19; *Rogers* v. *Beach*, 18 Wend. (N. Y.) 533; *Havens* v. *Dibble*, id. 655; *Clute* v. *Clute*, 3 Denio (N. Y.), 264; *Blydenburg* v. *Cotheal*, 4 N. Y. 418; *Jones* v. *Porter*, 6 How. Pr. (N. Y.) 286; *Grosvenor* v. *McGill*, 37 Ill. 240; *Ferris* v. *Ward*, 9 id. 506; *Tufts* v. *Carradine*, 3 La. Ann. 431; *Callihan* v. *Hallowell*, 2 Bay (S. C.), 9; *Ex parte Richardson*, 2 Story, 577, citing *Digges's Case*, 1 Co. 174; *Fitzwilliam's Case*, 6 id. 33; *Wrangham* v. *Hersey*, 3 Wils. 274.

The finding does not show at what hour the payment was made. If the horal divisions are not noticed, it must be presumed to have happened contemporaneously with the issuing of the proclamation. The crown, in such cases, has priority over the subject. *Edwards* v. *Reginam*, 9 Exch. 632.

The claimant in this case must show that the money to which he says he is *ex æquo et bono* entitled was wrongfully obtained by the United States. It is a presumption of law that officials and citizens obey the law and do their duty; and although it cannot supply the place of proof of a substantive fact, he who disputes it must furnish the requisite evidence to

overcome its effect. 2 Whart. Evid., sect. 1318, citing nearly forty cases; among them *Ross* v. *Reed*, 1 Wheat. 486; *Phila., &c. Railroad Co.* v. *Stimpson*, 14 Pet. 458; *Minter* v. *Crommelin*, 18 How. 88; *United States* v. *Weed*, 5 Wall. 62.

An individual, as against another, can sue in assumpsit, when the tort, though the gist of the transaction, arises out of a contract (*Stoyle* v. *Wescott*, 2 Day (Conn.), 422; *Buckley* v. *Storer*, id. 531; *Vasse* v. *Smith*, 6 Cranch, 231); but no new jurisdiction can be thereby conferred. No court can take jurisdiction of the assumpsit but the one which can give the remedy on the tort itself. *Mann* v. *Kendall*, 2 Jones (N. C.), L. 193; *Clark* v. *Dupree*, 2 Dev. (N. C.) L. 411; *Briggs* v. *Light-Boats*, 11 Allen (Mass.), 157.

The statutes conferring jurisdiction upon the court of claims exclude, by the strongest implication, demands upon the government, founded on torts committed by an officer in its service, and apparently for its benefit. *Gibbons* v. *United States*, 8 Wall. 269; *Morgan* v. *United States*, 14 id. 531. The restrictions they contain would be practically nullified, if in every case really dependent upon the tortious act of an officer, in which the government receives some incidental benefit, the tort could be waived, and the imagined assumpsit, founded only upon it, be made the basis of a suit. The provision limiting that court to matters of contract was based upon the theory that the State could do no wrong; that is, if it inadvertently inflicted wrong upon a citizen, redress would be given directly by Congress, and not through the instrumentality of a tribunal which renders judgment only upon judicial proof.

Mr. Edward Janin, contra, cited *Astley* v. *Reynolds*, 2 Stra. 915; *Close* v. *Phipps*, 7 Man. & G. 586; *Shaw* v. *Woodcock*, 7 Barn. & Cress. 73; *Atlee* v. *Backhouse*, 3 Mee. & W. 633; *Adams's Case*, 1 Ct. Cl. 306; *Boston & Sandwich Glass Co.* v. *City of Boston*, 4 Metc. (Mass.) 181; *Amesbury Woollen Co.* v. *Inhabitants of Amesbury*, 17 Mass. 461; *Preston* v. *City of Boston*, 12 Pick. (Mass.) 7; *Ripley* v. *Gelston*, 9 Johns. (N. Y.) 201; *Clinton* v. *Strong*, id. 370; *Moses* v. *Macferlan*, 2 Burr. 1005; *Atwell* v. *Zeluff*, 26 Mich. 118; *McKee* v. *Campbell*, 27 id. 497; *Wabaunsee County* v. *Walker*, 8 Kan. 431; *Wolf* v.

Marshall, 52 Mo. 167; *Hendy* v. *Soule*, Deady, 400; *Lauman* v. *Des Moines County*, 29 Iowa, 310; *Hubbard* v. *Brainard*, 35 Conn. 563; *United States* v. *Lapeyre*, 17 Wall. 191; *Allen* v. *McKeen*, 1 Sumn. 317.

MR. CHIEF JUSTICE WAITE delivered the opinion of the court.

In our opinion, this case is governed by the decision in *United States* v. *Lapeyre* (17 Wall. 191), which, although not concurred in by all the justices then composing the court, is accepted as conclusive upon the questions involved.

Under the ruling in that case, the proclamation took effect as of the beginning of June 13, 1865, and, therefore, covers all the transactions of that day to which it is applicable. We do not think this is a case in which fractions of a day should be taken into account.

While the questions of whether payments made under the circumstances of this case were voluntary or not, or whether, if voluntary, being made under a mutual mistake of law, can be recovered back, were not considered in the opinions filed, it is clear that the judgment rendered could not have been given, unless they had been decided adversely to the United States.

Judgment affirmed.

NOTE. — *United States* v. *Ceif's Assignee*, *United States* v. *Levy*, *United States* v. *Rowan*, *United States* v. *Yorke*, *United States* v. *White*, *United States* v. *Bonnafon*, and *United States* v. *Ethel's Assignee*, appeals from the Court of Claims, were also submitted at the same time and by the same counsel as was the preceding case. The first four involved similar facts to that case. In the remaining cases, the cotton was shipped to New Orleans from "States in insurrection" June 26 and June 27, 1865, and the payment made in ignorance of the President's proclamation of June 24, 1865. MR. CHIEF JUSTICE WAITE, in delivering the opinion of the court, remarked, that they were all governed by the decision in the immediately preceding case, and that the judgment in each case was

Affirmed.

GODFREY v. TERRY.

The Merchants' Bank of South Carolina, at Cheraw, suspended specie payments Nov. 13, 1860, and never thereafter resumed. Its charter contains a provision that, "in case of the failure of the said bank, each stockholder, copartnership, or body politic, having a share or shares in the said bank at the time of such failure, or who shall have been interested therein at any time within twelve months previous to such failure, shall be liable and held bound individually for any sum not exceeding twice the amount of his, her, or their share or shares." To enforce this provision, A., Dec. 2, 1870, filed, for himself and other note-holders, a bill in the Circuit Court, against the receiver of the bank, its cashier, five of its directors, and some sixty others, as stockholders, alleging, among other matters, that he was a citizen of Virginia, but making no averment touching the citizenship of the other note-holders or of the defendants. Such citizenship does not appear by the record, and the bank was not made a party. Twenty of the defendants were served with process, and the others did not enter an appearance. Dec. 15, 1874, a final decree was rendered, which, after declaring that the persons who held shares of stock in said bank "on the first day of the month of March, A.D. 1865, or who were interested therein within twelve months previous to said first day of March, 1865, are liable and are held bound individually to the complainants, for a sum not exceeding twice the amount of the share or shares held by said stockholders respectively," and reciting the names of over sixty of such stockholders, the number of shares held by each, and the amount for which each was liable, together with the names of five bill-holders, in addition to A., and the amount due to each of them, awards judgment and execution against the defendants, stockholders, as aforesaid, for the amount due said bill-holders respectively, besides costs. *Held*, 1. That the citizenship of the parties is not sufficiently shown to give the court below jurisdiction; and, were it otherwise, the decree is erroneous, in that it was taken against parties not served, and against the defendants jointly, while a several liability was imposed by the charter upon each stockholder, not to exceed twice the amount of his shares. 2. That, within the meaning of its charter, the bank failed Nov. 13, 1860. 3. That a suit against a person who was a stockholder at that date, or within twelve months prior thereto, was, when this suit was commenced, barred by the Statute of Limitations.

APPEAL from the Circuit Court of the United States for the District of South Carolina.

The facts are stated in the opinion of the court.

Mr. Theodore G. Barker and *Mr. James Lowndes* for the appellants.

Mr. D. H. Chamberlain and *Mr. Harvey Terry*, *contra*.

MR. JUSTICE MILLER delivered the opinion of the court.

The Merchants' Bank of South Carolina, at Cheraw, was

chartered in 1833, and the charter was renewed for twenty years in 1852. Both statutes provided that, "in case of the failure of the said bank, each stockholder, copartnership, or body politic, having a share or shares in the said bank at the time of such failure, or who shall have been interested therein at any time within twelve months previous to such failure, shall be liable and held bound individually for any sum not exceeding twice the amount of his, her, or their share or shares."

In December, 1870, Harvey Terry filed a bill in equity, in the Circuit Court of the United States for the District of South Carolina, to enforce this provision as to certain bills of the bank, of which he claimed to be the holder and owner. He alleges himself to be a citizen of the State of Virginia; and he prays for subpœna against William Godfrey, receiver of the bank, John Mattison, cashier, and five others, as directors of the bank, and some sixty others, as stockholders. The bank is not made a party, and no allegation is found in the bill, or anywhere else in the record, of the citizenship of any of the defendants. Of the persons made defendants by the bill, service was only obtained upon twenty, and no appearance was made for any one else.

The bill charges, among other matters, "that on the first day of March, A.D. 1865, and, indeed, at an earlier date, the said bank had failed, being then indebted to an amount far exceeding its assets; and that, in consequence of such failure, in accordance with the provisions of the said act, the stockholders, copartnerships, and bodies politic, holding shares in said bank, or who had been interested therein within twelve months previous to such failure, became liable for the debts of the said bank for sums not exceeding twice the amount of the shares held by them respectively."

And it was alleged that, under statutes of the State of South Carolina enacted for that purpose, the bank and all its property were, by the proper State court, placed in the hands of William Godfrey as receiver, who was then in charge of the same. It then prays for an account of the assets, furnishes a schedule of the stockholders, which plaintiff says is the best he can obtain, and calls for a discovery of the names of all who were stockholders at the date of the failure, and for twelve months

next preceding that date, and that, when ascertained, they may be made defendants, and charged with liability for his debt against the bank.

Answers were filed for all, or nearly all, who were served; but no replications to any of these answers are found in the record.

The answers generally set up a plea of the four years' statute of limitation. Several of the answers aver that the failure of the bank took place Nov. 13, 1860, when this bank, in common with all the banks of South Carolina, suspended specie payment of their obligations, and never afterwards resumed.

The only answers which admit the ownership of shares in the bank, and fix the time of said ownership, are the separate answers of A. Baxter Springs and R. A. Springs, each of whom admits that he held sixty shares of the bank in 1854, and has held the same ever since.

In December, 1872, the court made an order of reference to a master, with instructions to ascertain and report who were stockholders in the bank on the first day of March, 1865, and for twelve months previous thereto, and how many shares they held; also, to ascertain and report who were the creditors and bill-holders of the bank, and the amount due to them respectively.

This order, it will be seen, fixed the day of the failure of the bank at March 1, 1865. What evidence was before the court, or whether there was any, of the date of failure, the record does not show, except the following agreed statement of facts, which, as far as they show any thing on that subject, support the allegations of the answers, that the failure occurred in November, 1860:—

"In this case, the following facts are agreed to by counsel in the cause, and to be considered as testimony in the same before the court:—

"1. The Merchants' Bank of South Carolina, at Cheraw, suspended specie payments at the same time with the other banks in the State; was so suspended in November, 1860, and never after resumed specie payments.

"2. The said bank ceased to pay out its bills as soon as the Con-

federate currency began to circulate. The last time at which any of its bills were paid out was on the 6th of August, 1861.

"3. In his regular business as banker and broker, the complainant, Harvey Terry, bought the notes and bills of the said Merchants' Bank of South Carolina, as proved by him in this case, amounting to over $20,000, at prices ranging from twenty cents to five cents on the dollar of their face value. Most of these purchases were made in 1868 and 1869, at about fifteen cents on the dollar.

"4. That the Circuit Court of the United States for the District of South Carolina was held in Charleston, on the twelfth day of June, A.D. 1866."

The order, however, was binding on the master, and the date fixed by it controlled his action and all subsequent proceedings in the case. The master reported that there were sixty-four shareholders liable for various sums, taking the date of the failure mentioned in the order, and giving their names; that Harvey Terry, the plaintiff, was a creditor of the bank, on account of its circulating notes held by him, to the amount of $28,040.36, and Simonton and Barker to the amount of $26,760, and four other persons, whose claims in the aggregate were about $500.

The court made a final decree, which, reciting the names of the stockholders and the sums for which each of them was liable, says, "It is further ordered, adjudged, and decreed that the clerk of this court do enter up judgment for complainants to the amounts of their respective bills proven in this cause, as hereinafter stated." The names of the creditors and the sums due each of them is then stated, and the decree closes as follows: "And it is ordered that said bill-holders respectively have execution against said defendants, stockholders above named, for the several amounts above stated, and costs. It is further ordered that as to the defendant, Richard Lathers, the bill be dismissed with costs."

This whole proceeding is a very extraordinary one. It is a case in which, if the Circuit Court of the United States had any jurisdiction at all, it must have been on the ground of the citizenship of the parties. But the only allegation or evidence in the whole record on that subject is that plaintiff, Terry, is a

citizen of the State of Virginia. What is the citizenship of five or six other parties, who by the decree are called complainants and bill-holders, and who are awarded execution for their debts against sixty-four defendants, we are not informed. Nor is there a word said about the citizenship of any of the defendants. Upon what principle the court could entertain jurisdiction, and proceed to decree in the case, we are utterly at a loss to understand. If the bank had been a party, its citizenship might possibly have been inferred. But it was not made a party; and a decree was rendered against the defendants, by reason of an obligation which the statute imposes upon them. The court clearly had no jurisdiction of the case.

But suppose it had jurisdiction of the case as to the defendants who were served with process or who appeared. There were only twenty out of the sixty-four individuals against whom the decree was rendered who were served with process, or who appeared in any stage of the proceeding. As to the other forty-four persons against whom this decree is rendered, they have had no day in court, and were served with no process.

The master seems to have called before him a cashier or clerk of the bank, and obtained from him a list of the stockholders, whose names and the number of shares held by each he reported to the court; and on this the court rendered a decree against them. It is impossible to sustain such a decree, if it was shown they were all citizens of the State of South Carolina. The liability of each one of these stockholders, if liable at all, is his several liability. It is a liability depending upon the statutory contract. It depends on the fact of the failure of the bank, and on his holding shares in the bank when it failed, or within twelve months before its failure. His liability depends in every instance on facts peculiar to his own case; for, if the failure of the bank and the date of the failure may be common to all parties charged, it still remains that the ownership of shares, the number of shares, and the time when they were owned, are facts to be established against each man charged, and with which no other defendant has any connection. And in regard to which, if a *prima facie* case is made, each man may have a distinct defence depending on different testimony. These remarks are not made with a view of show-

ing that the stockholders must each be sued in a different action, but to show what is one of the most elementary principles of the law, — that no judgment can be rendered against a man who is not brought within the jurisdiction of the court, because somebody else is on a similar liability.

If, however, we examine the decree on the basis that relief in this action could be afforded to each creditor against the stockholders named, we do not think the present decree can be supported.

The first relief granted by it is, that "it is ordered that the clerk of this court do enter up judgment for the complainants to the amounts of their respective bills proven in this cause, as hereinafter stated."

Was any such judgment ever entered up? If so, it is not found in the record. Was it intended that any judgment except this decree should be entered? No necessity for it is to be seen. Who are the complainants that are to have this judgment? There is but one man named in the bill, or named anywhere else, as complainant.

But treating this as surplusage, the real relief granted is that in the close of the decree, in which it is ordered that the bill-holders respectively have execution against the stockholders for the amounts found due them. Six executions, to be issued against the same parties on the same liability, in a chancery decree. How are they to be enforced?

One of the stockholders, Allan McFarlan, is held liable for $100,000. He is not served with process, did not make any appearance, may reside in another State. Is all the money due to all the creditors to be made out of him, if his property can be found in the State? If so, what remedy has he against the others? Must he begin a new suit? Must he get another execution against all the others, by another proceeding in this suit?

If there is any reason why this suit should be sustained in chancery instead of a separate suit at law against each stockholder, it is that the burden may be equalized and properly distributed as to the shareholders, and the benefits among the creditors. This decree does nothing of the kind. It leaves the marshal of the court to collect the whole of each execution out

of one man, out of two men, out of ten men, as he pleases. It may be asked, How can this be avoided? The answer is easy. It was no trouble to take the sum due to each creditor and the sums due from each stockholder, give a decree *nisi* with time for each man to pay the sum assessed. Against such as did not pay let execution issue; and if *nulla bona* was returned, there must be a new assessment against the others until all should be paid or the sum of the several liabilities exhausted. On the other hand, the whole benefit of the chancery remedy, namely, the power to do justice to all by equalizing and properly distributing the relief and the burden, was not exercised by this decree. *Pollard* v. *Bailey*, 20 Wall. 520; *Hornor* v. *Henning et al.*, 93 U. S. 228.

But there is a well-founded objection to the decree, which is fatal to the relief sought by the bill under any circumstances.

We are of opinion that the court erred in fixing the date of the failure of the bank at March 1, 1865. On looking into this record to discover on what evidence the court fixed that date, we find that there was none at all. No evidence on this subject or any other was taken, at least none is found in the record prior to the order of the court referring the case to the master. That order fixed the first day of March, 1865, as the day of failure, and peremptorily directed the master to ascertain and report who were liable as stockholders, with reference solely to that date. The bill alleges that on that day, "and, indeed, at an earlier day, the bank had failed." The answer of every defendant who did answer says the bank failed in 1860. On what evidence, then, did the court, in its order of reference, fix that as the date of the failure? There is literally none in the record.

It is true that the master reports that in his examination of one or two witnesses "the fact was elicited that the bank failed on or about the first day of March, A.D. 1865." But this matter was not referred to him. He had no right to decide it, or to take testimony about it, or to report upon it. Exception was taken to this part of the report on the ground that the evidence showed that the bank suspended specie payments in November, 1860, and never afterwards resumed, and that

there was no other evidence by which the date of actual failure could be determined.

The evidence which he reports on that subject is that of the receiver and cashier, who stated that the bank finally closed March 1, 1865, though both state their belief that it was insolvent for some time before. All this, however, was improper testimony, because that issue had been decided by the court, and was not open before the master. Neither plaintiff nor defendant had any right to give evidence before him on that subject.

But there is evidence in the agreed statement of facts, not filed before the master, but in the open court, which we have already set forth, that the bank failed on the 18th of November, 1860, and never after resumed; that on that day it suspended specie payments, and never afterwards paid; that the last time it paid out any of its own bills was Aug. 6, 1861; after that it only paid its debts, whether due to depositors or holders of its bills, in Confederate money. What is meant by "failure of the bank," in the clause of its charter which makes the stockholders liable? If a partnership engaged in any mercantile or manufacturing business fails to meet, and pay when demanded, its current business paper as it falls due, that firm is said, in popular language, to have failed. And unless it compromises with its creditors, or makes arrangement for extension of time, it has failed in all senses of the word. If it continues to dishonor its paper, it has failed. If any business man or business firm does the same thing, they are, by the express terms of every bankrupt law, bankrupts. By the bankrupt law of England and of the United States, and by the insolvency laws of Massachusetts and many other States, the person or the partnership in business which is no longer able to pay its current debts as they fall due is insolvent. Here, then, in all these instances, what the bank at Cheraw did is called in others bankruptcy, insolvency, failure. Why is it not so with regard to a bank? If there be any difference, it should be in favor of the rule which brings into action the remedies for bank failures. They are more trusted than individuals; their functions are more important; their failures more disastrous to those who deal with them.

It is argued that the suspension of specie payments in 1860, by the banks of South Carolina, was legalized by her legislature. The legislature did no more, and could do no more, than to relieve them from the penalty of the forfeitures of their charters. It could not relieve them from the obligation to pay their debts in specie, nor extend the time for such payment. It could not do this, because any such law would impair the obligation of the creditor's contract. It could say: We won't forfeit your charter; we won't close your door; we won't prevent you from doing business if any one will trust you. But it could not and did not say, We relieve you from the obligation to pay your existing debts.* If they did not pay them, they failed. What are the principal functions of a bank? They are: 1, To receive and pay deposits; 2, to issue notes of circulation redeemable on presentation at its counter; 3, to buy and sell exchange; and, 4, to loan money. Now, of these functions the first two are, as to the public, by far the most important; and as to these the bank at Cheraw failed emphatically in 1860, and never resumed. That is to say, it failed to pay the deposits then held, or the circulating notes it had then out, according to its legal obligations to do so. It was not able to do so, and therefore was insolvent. It did not do so, and was therefore bankrupt. It refused to do so, and therefore it had failed.

If this bank had resumed payment shortly after the suspension, and had paid or offered to pay all its indebtedness in specie, there would have been no question of the liability of stockholders, nor any question of failure. But since it never did pay or offer to pay these obligations, since it was never after this able to pay these obligations, it was ever afterwards insolvent, and its failure must bear date of this first and continued refusal and inability to pay.

Although a provision similar to this had been in the charter of the Bank of South Carolina for over seventy years, no decision by her highest court of the question has been made. We are referred to decisions which determine under what circumstances a bank has forfeited its charter; but they have nothing to do with this question. The liability of the stockholder does not depend on forfeiture of the charter. It is a right given to

the creditor of the bank against its stockholders whenever it fails. The duties of the bank to the State depend on other principles, and are within the subsequent control of the legislature. The right of the creditor is beyond its control altogether.

Counsel for appellee furnishes an analysis of the statutory provisions similar to the one under consideration as found in the charters of South Carolina banks from 1801 to the one before us, and insists that the words "bankruptcy" and "failure" were used together and as synonymous until about the time of the charter of the Cheraw bank, when the word "failure" alone was used. But when both words were used, the reasonable inference is that both failure and bankruptcy were required to fix the liability of the stockholder, and when the word "bankruptcy" was dropped, it implied that failure alone was sufficient for that purpose.

But if failure meant bankruptcy, it must mean such a failure as would authorize proceedings in bankruptcy where a bankrupt law existed.

We have already seen that what the bank did in November, 1860, would have been an act of bankruptcy in an individual.

We are of opinion, then, that the bank failed, within the meaning of the clause of its charter, in November, 1860. It follows that only those who were then shareholders, or who had been within twelve months before, are liable, or could be liable, in this suit. We are further of opinion that as to those who were then stockholders the Statute of Limitation is a perfect bar, and no action can be maintained against them.

Decree reversed, and cause remanded with directions to dismiss the bill.

MR. CHIEF JUSTICE WAITE, with whom concurred MR. JUSTICE STRONG and MR. JUSTICE BRADLEY, dissenting.

I concur in the judgment of reversal, but do not think that the bill should be dismissed. In my opinion, the suspension of specie payments in 1860 was not a failure of the bank, within the meaning of that term as used in the charter; and there is, to my mind, no satisfactory evidence fixing the date of the actual failure earlier than March 1, 1865.

LAMBORN v. COUNTY COMMISSIONERS.

A contract for the purchase by A. from B. of certain lands in Kansas provided that A. should pay all taxes lawfully assessed on them, and that B. would convey them upon the payment of the purchase-money. The taxes assessed for the year 1870, held by the Supreme Court of the State to be valid, not having been paid, the county treasurer advertised, and, in May, 1871, sold the lands therefor, the county bidding them in. In 1872, C., trustee and representative of A., relying upon the validity of the tax, paid without protest into the county treasury, out of moneys belonging to A., a sum sufficient to redeem the lands so sold, and received the tax certificate therefor, which he took in his own name. He also paid a portion of the taxes for 1871 and 1872. The statute provides that, on the non-redemption of lands within three years from the day of the sale thereof for taxes, the treasurer may, on the presentation of the certificate, execute a deed to the purchaser, or refund the amount paid therefor, if he discovers that, by reason of error or irregularity, the lands ought not to be conveyed. This court having decided that the lands were not taxable, C., in 1874, offered to return the tax certificate to the county treasurer, and demanded that the moneys paid by him be refunded. That demand having been refused, he brought this action to recover them. *Held*, 1. That C. cannot be regarded as a purchaser of the lands. 2. That the payments by him so made, there having been neither fraud, mistake of fact, nor duress, were voluntary, in such a sense as to defeat the action. 3. That the statute of Kansas, as construed by the Supreme Court of that State, does not, upon the facts of the case, entitle him to recover.

ERROR to the Circuit Court of the United States for the District of Kansas.

The facts are stated in the opinion of the court.

Mr. C. E. Bretherton for the plaintiff in error.

Mr. S. O. Thacher, contra.

MR. JUSTICE BRADLEY delivered the opinion of the court.

Lamborn, the plaintiff in error in this case, is the trustee and representative of the National Land Company. This company had contracted with the Kansas Pacific Railway Company for the purchase of a large quantity of the lands in Kansas, to which the latter company was entitled under the congressional grant made to it, under the name of the Leavenworth, Pawnee, and Western Railroad Company, and the Union Pacific Railroad Company, Eastern Division, by the acts of July 1, 1862, and July 2, 1864. The contract required the land company to

pay all such taxes and assessments as might be lawfully imposed on the lands. And it provided that the railway company should, at the request of the land company, convey by deed of general warranty any of the lands purchased, whenever the purchase-money and interest and the necessary stamps should be furnished by the latter. The land company, after acquiring this contract, had contracted to sell large portions of the lands to third parties, taking from them agreements to pay all taxes and assessments that might be imposed upon the lands sold to them respectively. The lands in Dickinson County were assessed by the defendants for taxes for the years 1870, 1871, and 1872 successively, when, as yet, they were not taxable, no patent having been issued therefor, and the costs of surveying, selecting, and conveying the same not having been paid. These taxes, therefore, as decided by us in the case of *Railway Company* v. *Prescott* (16 Wall. 603), were not legal. Nevertheless, the Supreme Court of Kansas, in that case, had held such taxes legal; and the taxes for the year 1870, now in question, not having been paid, the treasurer of Dickinson County proceeded to advertise and sell the lands therefor in May, 1871, and, no person bidding the requisite amount, the lands were bid in for the county. The assessments for 1871 and 1872 were made against the lands whilst they were in this position.

By the laws of Kansas, if lands sold for taxes are bid in for the county, the county treasurer is authorized to issue a tax certificate to any person who shall pay into the county treasury an amount equal to the cost of redemption at the time of payment. Gen. Stat. of Kansas, c. 107, sect. 91. And if any lands sold for taxes are not redeemed within three years from the day of sale, the clerk of the county may execute a deed to the purchaser, his heirs or assigns, on the presentation to him of the certificate of sale. Sect. 112. It is further provided, that if the county treasurer shall discover, before the sale of any lands for taxes, that on account of any irregular assessment, or from any other error, such lands ought not to be sold, he shall not offer such lands for sale; and if, after any certificate shall have been granted upon such sale, the county clerk shall discover that, for any error or irregularity, such land ought not to be con-

veyed, he shall not convey the same; and the county treasurer shall, on the return of the tax certificate, refund the amount paid therefor on such sale, and all subsequent taxes and charges paid thereon by the purchaser or his assigns, out of the county treasury, with interest on the whole amount at the rate of ten per cent per annum. Sect. 120.

In 1872, the plaintiff in error paid into the county treasury the sums due for taxes, interest, &c., on the said lands in Dickinson County, which had been sold for taxes as aforesaid, and received tax certificates therefor, without making any protest, not being aware at that time, as he alleges, that the lands were exempt from taxation, but supposing that the taxes were legal and valid. On the second day of January, 1874, after the decision of this court in *Railway Company* v. *Prescott* (*supra*), he offered to return the tax certificates to the county treasurer, and demanded a return of the money paid by him into the county treasury, with interest, which was refused by the treasurer; and thereupon this suit, against the board of county commissioners of that county, was brought to recover the same.

Under this state of facts the judges of the Circuit Court differed in opinion on the following points of law: —

1. Whether judgment should be rendered for the plaintiff or for the defendant.

2. Whether the acquisition of said tax certificates and the subsequent payment of taxes by the plaintiff was a voluntary payment of the money now sought to be recovered back in such a sense as to defeat the right to such recovery.

3. Whether the statute of Kansas (Gen. Stat., p. 1058, sects. 120, 121) gives the right upon the facts above found to the plaintiff to recover in respect of the causes of action set out in the petition.

Judgment was given in favor of the defendant, in accordance with the opinion of the presiding judge, and Lamborn sued out this writ of error.

The plaintiff insists that he is to be regarded as a purchaser, and entitled under the statute referred to, or, if not under that statute, then on general principles of law, to a return of the money paid by him to the county treasurer.

But we are of opinion that the plaintiff cannot be regarded as a purchaser of the lands. The moneys were paid by him on behalf of the National Land Company, under the belief that the taxes were legal and valid; and it is not only apparent from the facts found that he made the payment in 1872 by way of redeeming the lands, but, if it did not so expressly appear, it ought to be presumed that he paid the money for that purpose. As between the land company and the Kansas Pacific Railway Company (which had not yet been paid for the lands), it was the duty of the former to pay all legal taxes and assessments imposed thereon. The plaintiff, as agent of the land company, could not acquire a tax title without being guilty of bad faith to the railway company. Taxes on lands in Kansas are assessed against the lands themselves, and a tax sale (when valid) confers an absolute title. Such a sale, had it been valid in this case, would have given the land company a full and valid title adverse to that of the railway company, and would have defeated their lien upon the same for the purchase-money. The cases on this subject are very full and explicit, and are based on considerations of equity and justice. Judge Cooley says: "There is a general principle applicable to such cases, that a purchase made by one whose duty it was to pay the taxes shall operate as payment only: he shall acquire no rights, as against a third party, by a neglect of the duty which he owed to such party. This principle is universal, and is so entirely reasonable as scarcely to need the support of authority. Show the existence of the duty, and the disqualification is made out in every instance." And he instances the cases of lessees and mortgagors as obviously within the disability. Cooley, Taxation, 846. In Blackwell on Tax Titles, 401, it is said: "A vendee cannot acquire a title adverse to his vendor by the purchase of the land at a tax sale, nor can an agent whose duty it is to pay the taxes become the purchaser of the principal's land at such a sale." This doctrine has been fully adopted by the Supreme Court of Kansas. *Carithers* v. *Weaver*, 7 Kan. 110; *Kurtz* v. *Fisher*, 8 id. 90.

The next question to consider, therefore, is whether money thus paid by way of redemption can be recovered back. There

are only three grounds on which such a recovery can be maintained, — fraud, mistake, or duress.

No fraud is charged.

Mistake, in order to be a ground of recovery, must be a mistake of fact, and not of law. Such, at least, is the general rule. 3 Pars. Contr. 398; *Hunt* v. *Rousmaniere*, 1 Pet. 1; *Bilbie* v. *Lumley*, 2 East, 188; 2 Smith, Lead. Cas. 398 (6th ed. 458), notes to *Marriot* v. *Hampton*. A voluntary payment, made with a full knowledge of all the facts and circumstances of the case, though made under a mistaken view of the law, cannot be revoked, and the money so paid cannot be recovered back. *Clarke* v. *Dutcher*, 9 Cow. (N. Y.) 674; *Ege* v. *Koontz*, 8 Pa. St. 109; *Boston & Sandwich Glass Co.* v. *City of Boston*, 4 Metc. (Mass.) 181; *Benson & Another* v. *Monroe*, 7 Cush. (Mass.) 125; *Milnes* v. *Duncan*, 6 Barn. & Cress. 671; *Stewart* v. *Stewart*, 6 Cl. & Fin. 911; and see cases cited in note to 2 Smith, Lead. Cas. 403, 404 (6th ed. 466), *Marriot* v. *Hampton*.

In the present case, there is no dispute that all the facts and circumstances of the case, bearing on the question of the legality of the tax, were fully known to the plaintiff. He professedly relied on the law, as declared by the Supreme Court of Kansas, and supposed that the tax was legal and valid.

The only other ground left, therefore, on which a right to recover back the money paid can be at all based, is, that the payment was not voluntary, but by compulsion, or duress. It is contended that the plaintiff was obliged to pay the taxes in order to remove the cloud from the title which had been raised by the tax sale, and to prevent a deed from being given to some third party after the expiration of the three years allowed for redemption.

It is settled by many authorities that money paid by a person to prevent an illegal seizure of his person or property by an officer claiming authority to seize the same, or to liberate his person or property from illegal detention by such officer, may be recovered back in an action for money had and received, on the ground that the payment was compulsory, or by duress or extortion. Under this rule, illegal taxes or other public exac-

tions, paid to prevent such seizure or remove such detention, may be recovered back, unless prohibited by some statutory regulation to the contrary. *Elliott* v. *Swartwout*, 10 Pet. 137; *Ripley* v. *Gelston*, 9 Johns. (N. Y.) 201; *Clinton* v. *Strong*, id. 369; and cases cited in 2 Smith, Lead. Cas. (6th ed.) 468; Cooley, Taxation, 568.

But it has been questioned whether a sale or threatened sale of land for an illegal tax is within this rule, there being no seizure of the property, and nothing supervening upon the sale except a cloud on the title. This view has been adopted in Kansas. In *Phillips* v. *Jefferson County* (5 Kan. 412), certain Indian lands, not legally taxable, were nevertheless assessed and sold for taxes, and a certificate issued to the purchaser. Phillips, having acquired title to the land, paid the amount of said taxes, at the same time denying their legality, and saying that he paid the money to prevent tax-deeds from issuing on the certificates. The court hold that the payment was purely voluntary, and add: "The money was not paid on compulsion or extorted as a condition. A tax-deed had been due for nearly two years. Had the plaintiff desired to litigate the question, he could have done so without paying the money; even had a deed been made out on the tax certificate, it would have been set aside by appropriate proceedings. There was no legal ground for apprehending any danger on the part of the plaintiff. He could have litigated the case as well before as after payment. Neither his person nor property was menaced by legal process. Regarding, then, the payment as purely voluntary, it is as certain as any principle of law can be that it could not be recovered back."

It seems to us that this case is precisely parallel with the one before us. We are unable to perceive any distinction between them. And as it is the law of Kansas which we are called upon to administer, the settled decisions of its Supreme Court, upon the very matter, are entitled to the highest respect. We are not aware of any decision which tends to shake the authority of *Phillips* v. *Jefferson County*. On the contrary, the same views have been subsequently reiterated. In *Wabaunsee County* v. *Walker* (8 id. 431), a case precisely like it, with the exception that when the taxes were paid to the county collector

to redeem the tax certificates, under a mistaken view of the law, he charged twice as much interest as he was entitled to, the party paid under protest. Yet it was held that he could not recover back even the illegal interest. The court relied on the previous decision in *Phillips* v. *Jefferson County*, and, after examining various other authorities, summed up the matter as follows: "A correct statement of the rule governing such cases as this would probably be as follows: Where a party pays an illegal demand with a full knowledge of all the facts which render such demand illegal, without an immediate and urgent necessity therefor, or unless to release his person or property from detention, or to prevent an immediate seizure of his person or property, such payment must be deemed to be voluntary, and cannot be recovered back. And the fact that the party, at the time of making the payment, files a written protest does not make the payment involuntary."

The question was again discussed in the recent case of the *Kansas Pacific Railway Co.* v. *Commissioners of Wyandotte County* (16 id. 587); and although, in that case, a personal tax paid by the railroad company under protest was recovered back, such recovery was allowed on the ground that, if the tax was not paid, it would be the immediate duty of the county treasurer to issue a warrant to the sheriff to levy upon and sell the personal property of the company therefor. But the principles of the former cases were recognized and affirmed.

It has undoubtedly been held in other States (though perhaps not directly adjudged) that a payment of illegal taxes on lands, to avoid or remove a cloud upon the title arising from a tax sale, is a compulsory payment. The case of *Stephan* v. *Daniels et al.* (27 Ohio St. 527) is of this character; though in that case the plaintiff relied on the provisions of a local statute; and besides this, a legal tax was combined with an illegal assessment, and perhaps a sale would have conferred a valid title upon the purchaser. Where such would be the effect of a tax sale, we cannot doubt that a payment of the tax, made to prevent it, should be regarded as compulsory and not voluntary. The threatened divestiture of a man's title to land is certainly as stringent a duress as the threatened seizure of his goods; and if imminent, and he has no other adequate remedy to pre-

vent it, justice requires that he should be permitted to pay the tax, and test its legality by an action to recover back the money. But as, in general, an illegal tax cannot furnish the basis of a legal sale, the case supposed cannot often arise. If the legality of the tax is merely doubtful, and the validity of the sale would depend on its legality, according to the law of Kansas, the party, if he chooses to waive the other remedies given him by law to test the validity of the tax, must take his risk either voluntarily to pay the tax, and thus avoid the question, or to let his land be sold, at the hazard of losing it if the tax should be sustained. Having a knowledge of all the facts, it is held that he must be presumed to know the law; and, in the absence of any fraud or better knowledge on the part of the officer receiving payment, he cannot recover back money paid under such mistake.

In conclusion, our judgment is that the questions submitted by the Circuit Court must be answered as follows: —

To the first: that judgment should be rendered for the defendant.

To the second: that the acquisition of the tax certificates and the subsequent payment of the taxes by the plaintiff were a voluntary payment, in such a sense as to defeat the right to recover in this action.

To the third: that the statute of Kansas, referred to in the question, does not, upon the facts found, give to the plaintiff the right to recover in respect of the causes of action set out in the opinion.

Judgment affirmed.

ASHCROFT v. RAILROAD COMPANY.

1. Reissued letters-patent No. 3727, granted by the United States, Nov. 9, 1869, to Edward H. Ashcroft, assignee of William Naylor, for an improvement in steam safety-valves, being a reissue of original letters No. 58,962, granted to Naylor Oct. 16, 1866, cannot, in view of the disclaimer of said Naylor in his specification, upon which English letters-patent No. 1830 were sealed to him Jan. 19, 1864, and of the prior state of the art, be construed to embrace a combination, in every form of spring safety-valve, of a projecting, overhanging, downward-curved lip or periphery, with an annular recess or chamber surrounding the valve-seat, into which a portion of the steam is deflected as it issues between the valve and its seat, but must be limited to a combination of the other elements of his device, with such an annular recess of the precise form, and operating in the manner described, so far as such recess, separately or in combination, differs in construction or mode of operation from those which preceded it.
2. Said reissued letters, thus limited, are not infringed by the use of a steam safety-valve made in substantial compliance with the specification of letters-patent No. 58,294, granted Sept. 25, 1866, to George W. Richardson.

APPEAL from the Circuit Court of the United States for the District of Massachusetts.

English letters-patent No. 1830, dated July 21, 1863, and sealed Jan. 19, 1864, were granted to William Naylor, of England, for improvements in safety-valves and in apparatus connected therewith. The specification describes his invention as consisting, "when using a spring for resisting the valve from opening, in the employment of a lever of the first order, one end resting by a suitable pin upon the safety-valve, and the other end of the lever resting upon the spring, the end resting upon the spring being bent downwards to an angle of about forty-five degrees from the fulcrum, so that when the valve is raised by the steam the other end of the lever is depressed upon the spring downwards, and at the same time is moved inwards towards the fulcrum, thus virtually shortening the end of the lever, and thereby counteracting the additional load upon the valve as it is raised from its seat by the greater amount of compression put upon the spring." He also describes a contrivance consisting of a lateral branch or escape-passage for a portion of the steam after it has passed the valve, the valve being made to project over the edges of the exit-passage, the projecting edges of the valve being made to curve

slightly downwards, so that the steam on issuing between the valve and its seat will impinge against the curved projecting portion of the valve, and a portion of it be directed downwards into the annular chamber surrounding the central passage, which chamber communicates at once with the branch exit-pipe, whilst the other portion of the steam ascends past the edges of the valve. He then says, "By this means I am enabled to avail myself of the recoil action of the steam against the valve, for the purpose of facilitating the further lifting of such valve when once opened; but I wish it to be understood that I lay no claim to such recoil action, nor to the extension of the valve laterally beyond its seat."

The specification of English letters-patent No. 1038, granted to Charles Beyer for improvements in safety-valves, dated April 25, 1863, and sealed Oct. 16, 1863, describes his invention as consisting "in forming a flange around the valve, commencing at the outer edge of the valve facing, which flange is under-cut and concave in shape, and the concave side is towards the seating of the valve, which has also a flange upon it, commencing at the outer edge of the valve-seating, but the upper surface of this flange is convex, and corresponds nearly to the concave surface of the flange upon the valve. There is a slight space between the concave and convex surfaces of the two flanges, which diminishes towards the outer edges of the flanges. When the steam begins to escape from between the surfaces of the valve, it gets between the concave and convex surfaces of the two flanges, and its force thus acts upon a larger area, and reacts upon the concave surface of the valve, and causes it to open to a greater extent than the ordinary valve."

Letters-patent of the United States No. 58,962 were issued, Oct. 16, 1866, to said Naylor for an improvement in safety-valves. The description of his invention in the specification is substantially the same as in that of his English patent. Nothing is said, however, of availing himself of the "recoil action of the steam against the valve, for the purpose of facilitating the further lifting of such valve when once opened;" nor is there any disclaimer, as in the English specification, of the recoil action and the extension of the valve laterally beyond its seat. The claim of the specification was the arrange-

ment in safety-valves "of bent levers of the first order, acting in combination with a spring or springs, the whole operating in the manner and for the purpose set forth." Sept. 8, 1869, Naylor assigned his letters-patent to Edward H. Ashcroft, who thereupon surrendered them for reissue. The specification of the reissued letters to Ashcroft, as the assignee of Naylor, which are No. 3,727, and bear date Nov. 9, 1869, declares that the main object to be attained by the invention, viz. the counteracting the additional load upon the valve as it is raised from its seat produced by the increased resistance of the spring, "is accomplished by using a lever of the first order, one end resting by a suitable pin upon the safety-valve, constructed and arranged as hereinafter described, and the other end of the lever resting upon a spring; but, in lieu of having this lever straight or nearly so, I propose to bend downward that end which is acted upon by the spring to an angle of about forty-five degrees, so that when the valve is raised by the steam the other end of the lever is depressed upon or against the spring downward, and at the same time is moved inward toward the fulcrum, thus virtually shortening the end of the lever, and thereby counteracting the additional load upon the valve as it is raised from its seat by the greater amount of compression or tension, as the case may be, which is put upon the spring; and my invention also consists in the valve C, constructed with projecting downward-curved lip or periphery, and in the annular chamber D, surrounding the valve-seat, whereby, as the spring is compressed by the lifting of the valve, the projecting lip of the valve and the annular recess are available in causing an increased pressure on the valve, and thus overcome the increased resistance of the spring, due to its compression, as hereinafter more fully set forth.

"Figs. 1 and 2 represent, respectively, a vertical section and front elevation of a safety-valve constructed according to my invention.

"A is the main thoroughfare, leading directly from the boiler; B, a lateral branch or escape-passage for a portion of the steam after it has passed the valve C. I make this valve to project over the edges of the exit-passage A, and to curve its projecting edges slightly downward, as shown in Fig. 1, so

that the steam, on issuing between the valve and its seat, will impinge against the curved projecting portion of the valve, and a portion of it will be directed downward into the annular chamber D, surrounding the central passage A, and communicating with the exit-pipe B, while the other portion of the steam ascends past the edge of the valve."

The claims of the reissue are: —

"1. The combination and arrangement, with the hereinbefore-described safety-valve, of bent levers of the first order, and the spring or springs, in the manner substantially as hereinbefore set forth.

"2. The safety-valve C, with its overhanging, downward-curved lip or periphery, and annular recess D, substantially as herein shown and described, and for the purpose set forth.

"3. The annular recess D, surrounding the valve-seat, substantially as herein set forth.

"4. The combination of the valve C and the annular recess D, as herein set forth, and for the purpose described."

Figs. 1 and 2 are as follows: —

Fig. 1.

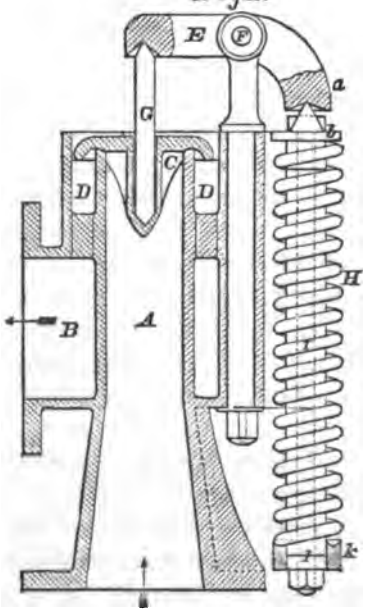

Fig. 2.

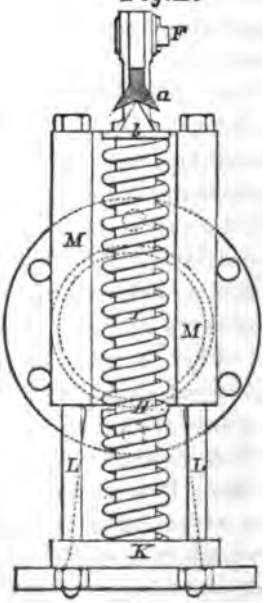

Dec. 14, 1869, this bill was filed by Ashcroft, to enjoin the alleged infringement by the Boston and Lowell Railroad Company of his reissued letters. The answer denied that they were for the same invention as that described in the original letters, that Naylor was the first and original inventor of the improvements specified in the reissued letters, or that they embrace the valve used by the company; and averred that the valves used by it were described by and embraced in letters-patent of a prior date to that of Naylor's invention, and were made under letters-patent No. 58,294, granted by the United States, Sept. 25, 1866, to George W. Richardson.

The specification of Richardson's patent describes his invention as follows: —

"E E is the valve seat.

"F F is the ground joint of the valve and seat.

"P is the countersink or centre upon which the point of the stud extending from the scale lever rests in the usual manner.

"The nature of my invention consists in increasing the area of the head of the common safety-valve outside of its ground joint, and terminating it in such a way as to form an increased resisting surface, against which the steam escaping from the generator shall act with additional force after lifting the valve from its seat at the ground joint; and so, by overcoming the rapidly increasing resistance of the spring or scales, insure the lifting of the valve still higher, thus affording so certain and free a passage for the steam to escape as effectually to prevent the bursting of the boiler or generator, even when the steam is shut off and damper left open.

"To enable others skilled in the art to make and use my invention, I will proceed to describe its construction and operation. To the head of the common safety-valve, indicated by all that portion of Fig. 2 lying within the second circle from the common centre, I add what is indicated by all that portion lying outside of the said circle, in about the proportion shown in the figure. A transverse vertical section of this added portion is indicated, in Fig. 4, by those portions of the figure lying outside of the dotted lines *p p*, *p p*, while all that portion lying within the dotted lines *p p*, *p p* indicates a transverse vertical section of the common safety-valve alone. This increased area may be made by adding to a safety-valve already in use, or by casting the whole entire.

"I terminate this addition to the head of the valve with a circular or annular flange or lip *c c*, which projects beyond the valve-seat E E, Fig. 3, and extends slightly below its outer edge, fitting loosely around it and forming the circular or annular chamber D D, whose transverse section, shown in the figure, may be of any desirable form or size. This flange or lip *c c*, fitting loosely around the valve-seat E E, is separated from it by about $\frac{1}{64}$th of an inch for an ordinary spring or balance. For a strong spring or balance this space should be diminished, and for a weak spring or balance it should be increased to regulate the escape of the steam as required. Instead of having the flange or lip *c c* project beyond, and extend below and around the outer edge of the valve-seat, as shown in Fig. 3, a similar result may be attained by having the valve-seat itself project beyond the outer edge of the valve-head and terminating it with a circular or annular flange or lip, extending slightly above and fitting loosely around the outer edge of the flange or lip *c c* of the valve-head; but I consider the construction shown in Fig. 3 preferable.

"With my improved safety-valve, constructed as now described, and attached to the generator in the usual way, the steam escaping in the direction indicated by the arrows in Fig. 3 first lifts the valve from its seat at the ground joint E F, and then, passing into the annular chamber D D, acts against the increased surface of the valve-head, and by this means, together with its reaction produced by being thrown downwards upon the valve-seat F E, it overcomes the rapidly increasing resistance of the spring or balance, lifts the valve still higher, and escapes freely into the open air until the pressure in the generator is reduced to the degree desired, when the valve will be immediately closed by the tension of the spring or balance. The escape of the steam, by means of this safety-valve, is so certain and free, that the pressure of the steam in the generator or boiler will not increase beyond the point or degree at which the valve is set to blow off.

"What I claim as my improvement, and desire to secure by letters-patent, is a safety-valve with the circular or annular flange or lip *c c* constructed in the manner, or substantially in the manner, shown, so as to operate as and for the purpose herein described."

The drawings referred to in Richardson's specification are as follows:—

Fig. 1.

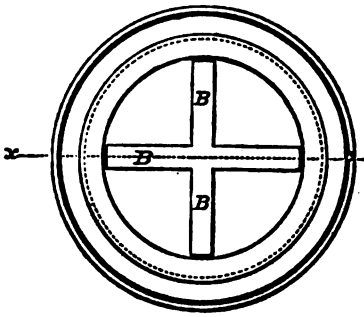

Fig. 2.

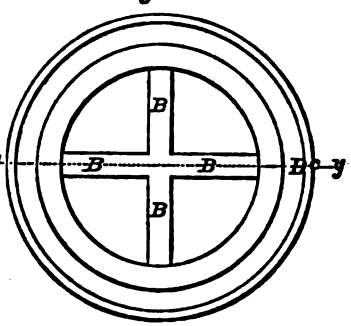

Fig. 3.

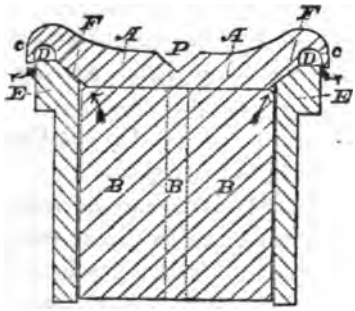

Fig. 4.

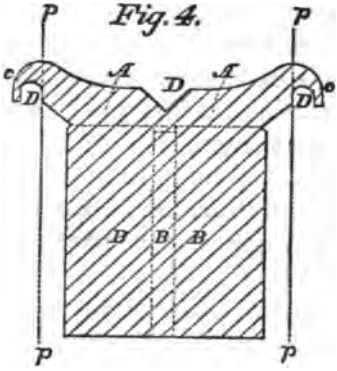

The court below, upon final hearing, dismissed the bill, upon the ground that there was no infringement. The complainant then appealed here.

Mr. Francis Forbes and *Mr. Thomas William Clarke* for the appellant.

Mr. Benjamin Dean and *Mr. J. G. Abbott, contra.*

MR. JUSTICE CLIFFORD delivered the opinion of the court.

Causes of action arising under the patent laws are originally cognizable, as well in equity as at law, by the circuit courts, or the district courts having the power and jurisdiction of a circuit court, subject to the condition that the final judgment or decree in such a case may be removed here for re-examination.

Improvements were made by William Naylor in steam safety-valves, for which, on the 16th of October, 1866, he obtained letters-patent of the United States; and it appears that he subsequently assigned the patent to the complainant, and that the complainant, as such assignee, surrendered and obtained the reissued patent which is the foundation of the present suit. Wrongful infringement is charged, and the complainant prays for an account and for an injunction. Service was made; and the respondents appeared and set up certain defences in their answer, as follows: 1. That the reissued patent is not for the same invention as the original. 2. That the assignor of the complainant was not the original and first inventor of the improvement. 3. That the reissued patent does not cover and embrace the safety-valve used by the respondents. 4. That safety-valves such as are used by the respondents were described and patented in letters-patent granted prior to the patent and supposed invention of the assignor of the complainant, as alleged in the answer.

Proofs were taken, the parties heard, and the Circuit Court entered a final decree dismissing the bill of complaint.

Due appeal was taken by the complainant, and he assigns the following errors: 1. That the court erred in giving weight to the disclaimer of the supposed inventor, as set forth in his English patent. 2. That the court erred in ruling that the patent of the complainant must be limited to claims for a combination of the valve described in the specification, with the annular recess surrounding the central chamber, as explained in the court's opinion. 3. That the court erred in deciding that the assignor of the complainant did not invent the overhanging, downward-curved lip, and that he was not the first to use an annular chamber surrounding the valve-seat, into which a portion of the steam is deflected as it issues between the valve and the seat. 4. That the court erred in deciding that the valve used by the respondents is not within the complainant's reissued patent. 5. That the court erred in deciding that there is a substantial difference between the valve used by the respondents and the valve described in the complainant's reissued patent.

Preliminary to the investigation of the inquiries suggested in

the errors assigned by the appellant, it becomes expedient to ascertain what is the construction of the patent described in the bill of complaint, and whether the same has been infringed by the respondents. Obvious convenience suggests that these two matters be first determined, for the plain reason that, if the proofs fail to establish the charge of infringement, most or all of the errors assigned will become immaterial in disposing of the case.

Persons seeking redress for the unlawful use of letters-patent are obliged to allege and prove that they, or those under whom they claim, are the original and first inventors of the improvement described in the patent, and that the same has been infringed by the party against whom the suit is brought. Both of those allegations must be proved by the party instituting the suit; but where he introduces the patent in evidence, it affords a *prima facie* presumption that the first allegation is true, and inasmuch as it is not controverted in the answer in this case, the finding in that regard must be in favor of the complainant.

Suppose that is so, still the charge of infringement is denied by the respondents, which issue cannot be satisfactorily determined without first ascertaining the true nature and character of the improvement secured to the complainant in his reissued letters-patent.

Three patents — one in England, two in the United States — were granted to the complainant or his assignor for the improvement which is the subject of the present controversy. Naylor, it is claimed, was the inventor of the patented improvement, and he took out his first patent in England, where he resided. As the patentee states, the invention relates to certain improvements in safety-valves, and consists, when using a spring for resisting the valve from opening, in the employment of a lever of the first order, one end resting by a suitable pin upon the safety-valve, and the other end of the lever resting upon the spring, the end resting upon the spring being bent downwards to an angle of about forty-five degrees from the fulcrum, so that when the valve is raised by the steam the other end of the lever is depressed upon the spring downwards, and at the same time is moved inwards towards the fulcrum, thus

virtually shortening that end of the lever, and thereby counteracting the additional load upon the valve as it is raised from its seat by the greater amount of compression put upon the spring.

Exceptional modifications in certain features of the improvement are subsequently suggested, and then the patentee proceeds to explain the functions of the different devices by reference to the drawings, in the course of which he states that he prefers to make the valve project over the edges of the exit-passage and to curve the projecting edges of the valve slightly downwards, so that the steam on issuing between the valve and its seat will impinge against the curved projecting part of the valve, which will direct a portion of it downwards into the annular chamber surrounding the central passage, while the other portion of the steam ascends past the edges of the valves. By that means the patentee states that he is enabled to avail himself of the recoil action of the steam against the valve, for the purpose of facilitating the further lifting of the valve when once opened; but he adds, what it is important to notice, that he wishes it to be understood that he lays no claim to such recoil action, nor to the extension of the valve laterally beyond its seat.

Prior to that, a safety-valve of substantially the same mode of operation had been patented in the same country to Samuel Beyer, and the reasonable presumption is that the disclaimer was inserted in the patent subsequently granted, because it had been previously invented by another.

Letters-patent to Charles Beyer were sealed Oct. 16, 1868; and the patentee states that his invention consists in forming a flange round the valve, commencing at the outer edge of the valve-facing, which flange is under-cut and concave in shape, and that the concave side is towards the seating of the valve, which has also a flange upon it, commencing at the outer edge of the valve-seating, but that the upper surface of the flange is convex, and corresponds nearly to the concave surface of the flange upon the valve. There is a slight space between the concave and convex surfaces of the two flanges, which diminishes towards the outer edge of the same. When the steam begins to escape from between the surfaces of the valve, it gets

between the concave and convex surfaces of the two flanges, and thus acts upon a larger area, and reacts upon the concave surface of the valve, and causes it to open to a greater extent than the ordinary safety-valve. Such a valve, the patentee states, will lift promptly when the required pressure is obtained, and will open to a much greater extent than the valve in common use prior to that invention. Extra pressure upon the valve will readily close it after it has lifted, but it does not shut self-acting till the pressure in the boiler has diminished several pounds below the pressure at which the valve was lifted.

Without more, these suggestions are sufficient to show that the Beyer patent, which antedates the invention of the complainant, contains substantially the same mode of operation to produce the recoil action of the steam as that disclaimed in the English patent, and shows that the disclaimer was in all probability made because it was well known to the patentee and to the officials who issued the letters-patent that another was the original and first inventor of the patented valve. Nothing of the kind is embraced in the claims of the English patent granted to the patentee, nor is there any thing in the specification which has any tendency to show that the patentee ever supposed that he invented that feature of the improved valve which he disclaimed.

Two patents for the improvement have been granted in this country, — one, the original, to the alleged inventor, and the reissued patent to the complainant, on which the suit is founded. Neither of them contains any disclaimer of the kind mentioned in the English patent, though it is conceded that both the original and the reissued patent were granted for the same invention as the English patent. Nor could that concession properly be withheld, as it is as certain as truth that the feature of the steam-valve in question was fully and clearly described in that specification, and that the patentee stated that he wished it to be understood that he did not lay any claim to the recoil action, nor to the extension of the valve laterally beyond its seat.

Explicit as that disclaimer is, still it is assigned for error by the complainant that the circuit judge erred in giving weight

to it; but the court here is of the opinion that there is no merit in that objection. Instead of that, the court decides that the patent in suit, in order that it may be held valid, must be construed in view of the disclaimer contained in that patent, and be limited to the particular devices shown in the specification for effecting such recoil action of the steam.

Taken as a whole, the facts show conclusively that the assignor of the complainant was not the first person to devise means for using the recoil action of steam to assist in lifting the seat of the steam-valve for the purpose described, and it follows that the patent in suit must be limited to what he actually invented, which is the devices, shown in the specification and drawings, to enable the party to avail himself of such recoil action.

Decided support to that view is found in the specification of the Beyer patent, which shows that the apparatus in question had an overhanging, downward-curved lip, and an annular recess into which the steam was directed downwards on issuing between the valve and its seat, while a portion of the steam impinged against the projecting part of the valve.

Viewed in the light of that suggestion, it is clear, as decided by the circuit judge, that the assignee of the invention in controversy cannot claim that Naylor was the original and first inventor of that feature of the improvement, nor can it properly be claimed that he invented the combination in a spring safety-valve of every form of a projecting, overhanging, downward-curved lip in such a device, with the annular recess surrounding the valve-seat, into which a portion of the steam is deflected as it issues between the valve and its seat. Limited in that way as the patent must be, in order that it may be upheld as valid, the question remains whether it has been infringed by the respondents.

Throughout, the steam-valve used by the respondents is the valve patented to George W. Richardson, whose patent makes a part of the record. He obtained his patent Sept. 25, 1866, nearly a month earlier than the date of the original American patent granted to Naylor. His invention, as he describes it, consists in increasing the area of the head of the common

safety-valve outside of its ground joint, and terminating it in such a way as to form an increased resisting surface, against which the steam escaping from the generator shall act with additional force after lifting the valve from its seat at the ground joint, and so by overcoming the rapidly increasing resistance of the spring or scales will insure the lifting of the valve still higher, thus affording so certain and free a passage for the steam to escape as effectually to prevent the bursting of the boiler or generator, even when the steam is shut off and the damper left open.

Safety-valves previously in use were not suited to accomplish what was desired, which was to open for the purpose of relieving the boiler, and then to close again at a pressure as nearly as possible equal to that at which the valve opened. Sufficient appears to show that Richardson so far accomplished that purpose as to invent a valve which would open at the given pressure to which it was adjusted, and relieve the boiler, and then close again when the pressure was reduced about two and one-half pounds to the inch, even when the pressure in the generator was one hundred pounds to the same extent of surface, which made it in practice a useful spring safety-valve, as proved by the fact that it went almost immediately into general use.

Other inventors prior in date to the Naylor invention attempted to make the desired improvement in the common safety-valve, and it is evident from what appears in the record that the efforts of one or more of them besides Beyer were attended with more or less success; but it is unnecessary to enter into those details, as it is obvious, from what appears in the Beyer patent, that Naylor did not invent the overhanging, downward-curved lip of the improved valve, nor was he the first to use an annular chamber surrounding the valve-seat, into which a portion of the steam is deflected as it issues between the valve and its seat; and the court here concurs with the circuit judge that his patent must be limited to the combination of the other elements with such an annular recess as he has described, and operating in the described manner, so far as such recess separately considered or in combination differs in construction and mode of operation from the patented steam-

valves which preceded it, as shown in the evidence giving the antecedent state of the art. It follows, therefore, that the claims of the reissued patent in suit cannot be held to cover the safety-valve used by the respondents, which in its construction and mode of operation is substantially different, as appears from a comparison of the models and an inspection of the drawings, as well as from the description given of the same in the respective specifications.

Support to that view of a decisive character is also derived from the testimony of the expert witnesses on both sides. Enough appears in the explanations of the specification and the expert testimony to satisfy the court that it was the intention of the inventor of the complainant's valve to use the impact of the issuing steam upon the concave lip of the valve to assist in lifting it without other aid, except so far as it was helped by the diminution of atmospheric pressure on the top of the valve, consequent upon the issuing of a portion of the steam in an upward direction around the periphery of the valve, the annular chamber into which the steam is discharged on leaving the valve serving no other purpose than that of a conduit for the steam, if the valve is constructed in accordance with the drawings of the original patent.

Examined in the light of these suggestions, it is plain that the steam-valve used by the respondents cannot be held to be an infringement of that described in the specification of either of the three patents representing the invention claimed by the complainant.

Coming to the specification that describes the steam-valve used by the respondents, it will at once be seen that its construction and mode of operation is substantially different in important particulars, as follows: When the valve opens, the steam expands and flows into the annular space around the ground joint. Its free escape, which might otherwise be too free, is prevented by a stricture or narrow space formed by the outer edge of the lip and the valve-seat. By these means the steam escaping from the valve is made to act, by its expansive force, upon an additional area outside of the device, as ordinarily constructed, to assist in raising the valve, the stricture being enlarged as the valve is lifted from its seat, and vary-

ing in size as the quantity of the issuing steam increases or diminishes.

Important functions, not very dissimilar in the effect produced, are performed by the two patented valves in controversy; but the means shown in the respective specifications, and the mode of operation described to produce the effect, are substantially different in material respects, which shows to a demonstration that the complainant cannot prevail, unless it can be held that his assignor invented the overhanging, downward-curved lip, and that he was the first to use an annular chamber surrounding the valve-seat, into which a portion of the steam is deflected as it issues between the valve and its seat. Neither of those conditions can be found in favor of the complainant, and of course it cannot be held that the respondents have infringed his patent.

Confirmation of that conclusion of the most decisive character is found in the testimony of the experts, which will not be reproduced, as it would extend the opinion beyond a reasonable length.

Experiments almost without number were made by the experts, and the court is furnished with very many exhibits intended to explain the construction and mode of operation of the different steam-valves described in the various patents given in evidence in the case; but the court has not found it necessary to enter into those details, preferring to rest the decision upon the construction of the complainant's patent and his failure to show that it has been infringed by the respondents.

Decree affirmed.

McMICKEN v. UNITED STATES.

1. On Dec. 17, 1798, A. applied to the Spanish governor-general for a grant of six hundred and ten arpents of land, for a plantation and settlement, in the district of Baton Rouge, three miles from the Mississippi. To the application was annexed a certificate of the local surveyor that in the district of St. Helena, on the west bank of the Tangipahoa River, beginning at the thirty-first parallel of latitude, the boundary line of the United States, and about fifty miles east of the Mississippi, there were vacant lands in which could be found the arpents front which the petitioner asked for, excluding whatever might be in the possession of actual settlers. To this application the surveyor of the district added a further certificate, dated Dec. 22, 1798, and addressed to the governor, by which he stated that four hundred and ten arpents might be conceded in the place indicated by the local surveyor. Thereupon De Lemos, then governor, issued a warrant or order of survey, as follows:—

"NEW ORLEANS, Jan. 2, 1799.

"The surveyor of this province, Don Carlos Trudeau, shall locate this interested party on four hundred and ten arpents of land, front, in the place indicated in the foregoing certificate, they being vacant, and thereby not causing injury to any one, with the express condition to make the high-road and do the usual clearing of timber in the absolutely fixed limit in one year; and that this concession is to remain null and void if at the expiration of the precise space of three years the land shall not be found settled upon, and to not be able to alienate it within the same three years, under which supposition there shall be carried out uninterruptedly the proceedings of the survey, which he (the surveyor) shall transmit to me, so as to provide the interested party with the corresponding title-papers in due form."

Neither survey, settlement, nor improvement of any kind was ever made by A., or by any one claiming under him. On Feb. 26, 1806, after the cession of Louisiana to the United States, but before this part of it was surrendered by Spain, he procured from the local Spanish surveyor at Baton Rouge an authority to a deputy surveyor, to survey the tract according to certain general instructions which do not appear, specifying, however, that it was understood that the warrant was for a certain number of arpents in front, and that the depth ought to be forty arpents, or four hundred perches of Paris. Nothing was ever done by the deputy surveyor, and the prosecution of the grant was abandoned by A. and his assigns until long afterwards. Grandpré having, in 1806, become governor, issued a warrant for a thousand arpents, on a portion of the tract, to one Yarr, whose title was subsequently confirmed by the United States. Before the country was occupied by the United States, actual settlers had become possessed of the whole tract, and they were, upon the report of the commission appointed to investigate the titles to land in that region, subsequently confirmed in their holdings by the act of March 3, 1819. A., Sept. 16, 1814, assigned his right to the land to B., who, Dec. 26, 1824, presented his claim to the lands to the commissioners, under the act passed May 26, 1824 (4 Stat. 59), by whom it was rejected. B. having died, C., claiming as his devisee, brought this suit under the act of June 22, 1860, entitled "An Act for the final adjust-

ment of land-claims in the States of Florida, Louisiana, and Missouri, and for other purposes" (12 id. 85), but showed no derivation of title to himself. *Held*, 1. That the lands, by reason of the non-performance within the specified time of the conditions mentioned in the warrant of survey, were forfeited and became subject to the disposing power of the United States. 2. That, if the legal representatives of B. had a valid claim, C., being a stranger thereto, and showing no interest therein, would not be entitled to a decree confirming it in their favor.

2. The said act of June 22, 1860 (*supra*), although it contains sundry remedial provisions, and removes the objection arising from the want of title in the government which was in possession of the territory at the time of making the grants, if they were otherwise sustainable on the principles of justice and equity, does not aid claims which from intrinsic defects were invalid in 1815 or 1825.

3. The laws and the proceedings thereunder, touching French and Spanish grants, mentioned, and the decisions as to the effect thereon of a breach of the conditions annexed thereto cited and examined.

APPEAL from the District Court of the United States for the District of Louisiana.

The facts are stated in the opinion of the court.

Mr. Willis Drummond and *Mr. Robert H. Bradford* for the appellant.

The Solicitor-General, contra.

MR. JUSTICE BRADLEY delivered the opinion of the court.

The claim to lands in this case originated as follows: On the 17th of December, 1798, William Coleman, an inhabitant of New Feliciana, within the bounds of the present State of Louisiana, east of the Mississippi River, applied to the Spanish governor-general for a grant of six hundred and ten arpents of land, for a plantation and settlement, in the district of Baton Rouge, three miles from the Mississippi. A certificate of the local surveyor was annexed to the application, certifying that there were vacant lands in the district of St. Helena, on the west bank of the Tangipahoa River, beginning at the thirty-first parallel of latitude (the boundary line of the United States), in which could be found the arpents front which the petitioner asked for, excluding whatever might be in the possession of actual settlers. The place thus indicated was about fifty miles east of the Mississippi. To this application Grandpré, the surveyor of the district, added a further certificate, dated Dec.

22, 1798, and addressed to the governor, by which he stated that four hundred and ten arpents might be conceded in the place indicated by the local surveyor. Thereupon the governor, De Lemos, on the 2d of January, 1799, issued a warrant or order of survey, in the following terms (as translated):—

"NEW ORLEANS, Jan. 2, 1799.

"The surveyor of this province, Don Carlos Trudeau, shall locate this interested party on four hundred and ten arpents of land, front, in the place indicated in the foregoing certificate, they being vacant, and thereby not causing injury to any one, with the express condition to make the high-road and do the usual clearing of timber in the absolutely fixed limit in one year; and that this concession is to remain null and void if at the expiration of the precise space of three years the land shall not be found settled upon, and to not be able to alienate it within the same three years, under which supposition there shall be carried out uninterruptedly the proceedings of the survey, which he (the surveyor) shall transmit to me, so as to provide the interested party with the corresponding title-papers in due form.

(Signed) "MANUEL GAYOSO DE LEMOS."

This is the only title presented, and neither survey nor settlement, nor improvement of any kind, appears ever to have been made on the part of the petitioner or any one claiming under him. The only thing done by him in that direction was to procure from Pintado, the local Spanish surveyor at Baton Rouge, on the 26th of February, 1806, after the country had been ceded to the United States, but before this part had been surrendered by Spain, an authority to one Ira C. Kneeland, a deputy surveyor, to survey the tract according to certain general instructions (which do not appear), specifying, however, that it was understood that the warrant was for a certain number of arpents in front, and that the depth ought to be forty arpents, or four hundred perches of Paris; which would make the tract contain sixteen thousand four hundred arpents, the quantity now sought to be recovered of the United States. But nothing was ever done by Kneeland, and the prosecution of the grant seems to have been abandoned by Coleman and his assigns until long afterwards. Grandpré himself, in 1806 (hav-

ing become governor), issued a warrant for a thousand arpents, on a portion of the tract, to one Robert Yarr, who entered upon and settled the same; and his title was subsequently confirmed by the United States. And before the country was occupied by our government, actual settlers had become possessed of the whole tract, who were subsequently confirmed in their holdings by the act of March 8, 1819, upon the report of the commissioners who had been appointed to investigate the title to lands in that region. Most of the claims of these settlers were presented to Commissioner Cosby in 1812, 1813, and 1814, he being then engaged in ascertaining all claims to lands in the district west of Pearl River. His report was made in the early part of 1815 (Amer. State Papers, Public Lands, vol. iii. pp. 39–76); but no claim seems to have been presented by Coleman for the lands in question.

On the 16th of September, 1814, he assigned his right to the land to one Charles McMicken, under whom the appellant claims as devisee. But neither did McMicken present any claim to the commissioner.

Under the various laws extending the time for presenting claims several other reports were subsequently made by the commissioners for the St. Helena district west of Pearl River; and finally, under an act passed May 26, 1824 (4 Stat. 59), additional claims were received in that year, and a report was made in the January following, in which the claim in question first comes to notice. The petition in this case states that it was presented to the commissioners on the 26th of December, 1824. With various others, it was rejected by them on the ground that "the claimants had not complied with the requisitions of the law as regards either habitation or cultivation." Amer. State Papers, Public Lands, vol. iv. pp. 438, 443. This report was confirmed by Congress by the act of May 4, 1826. 4 Stat. 159. In 1846, McMicken instituted suit in the United States District Court of Louisiana, against the United States, under the provisions of the act of June 17, 1844, for the confirmation of the grant; but this suit was not prosecuted when called up for trial, and was dismissed, and judgment entered for the United States. In March, 1873, the present suit was brought under the act of June 22, 1860, entitled "An Act for the final

adjustment of private land-claims in the States of Florida, Louisiana, and Missouri, and for other purposes." 12 id. 85. A decree was rendered in favor of the United States. McMicken thereupon appealed to this court.

Two questions arise in the case: *first*, whether the petitioner has shown any derivation of title to himself; and, *secondly*, whether the claim is a valid one.

The petitioner claims as devisee of Charles McMicken, under his will, bearing date in 1855, which is set out in full in the record. An inspection of this will shows that the tract in question was not named in it, nor devised in any way. It mentions various other tracts in Louisiana belonging to the testator, but not this one. It would seem that McMicken had abandoned all idea of establishing the validity of the claim. As the appellant does not pretend to have any other title than that of devisee under this will, it is difficult to see how his petition can be sustained. If this were an action of ejectment, there could be no question on the subject. But it is contended on the part of the petitioner that whether his own title be properly deraigned or not, the court, if satisfied of the validity of McMicken's title, might make a decree in favor of his legal representatives, for the benefit of whom it might concern. A decree in this form is often made against the government in these land cases, when a title is satisfactorily established, and the parties prosecuting it connect themselves in some way with it, so as to show some real interest to be protected. *Castro* v. *Hendricks*, 23 How. 438; *Brown* v. *Brackett*, 21 Wall. 387. But a mere stranger to the title can hardly ask the court to go that length. It is not for every one who chooses to take up the prosecution of such claims, without any connection whatever with the title sought to be established.

But the more important question in this case is that relating to the validity of McMicken's title to the land.

We do not understand that the act of 1860 was intended to make any claims valid which would not have been so before, if the government making the grant had had the right to make it. The objection of want of title in the granting power was removed by the act, as to all grants made by a government in possession which were otherwise sustainable on the principles of

justice and equity; the time for presenting claims was opened and extended; and actual surveys were dispensed with where the land could be otherwise identified. These were the principal remedial provisions of the act so far as relates to the validity of titles. Claims invalid from intrinsic defects in 1815 or 1825 are not helped by the act of 1860. The utmost that our treaty stipulations ever required was, that we should sustain titles which would have been sustained by the government from which our title to the territory was derived. Nothing more could be fairly asked, and we think that nothing more was intended by Congress to be given, except to make provision (as it did from time to time) in favor of actual settlers.

The question then arises, whether the decision of the commissioners in 1824, with regard to this claim, was not correct. The title was nothing but a warrant or permit to survey, occupy, and improve the land, with a view to a grant when this should be done, and with an express condition to be void if not done within three years. Such warrants or permits have invariably been respected by our government, whenever there has appeared any *bona fide* attempt to perform the conditions, or any plausible excuse for their non-performance. But where no such attempt has been made, and no excuse is offered for not making it, the claim has been disallowed. Under such circumstances it would be simply asking the government for a gratuity, a donation without the slightest consideration, to seek a grant of the land. The government does not stand upon formal conditions. It does not demand that there should have been an actual survey, if the land can be otherwise identified. The act of 1860 expressly gives relief not only in case of "orders of survey duly executed," but where there has been "any other mode of investiture of title, by separation of the land from the mass of the public domain, either by actual survey, or definition of fixed natural and ascertainable boundaries, or initial points, courses, and distances, by the competent authority prior to the cession to the United States." The present case may perhaps come within this category. The description in the warrant, aided by the usages of the Spanish government with regard to surveys in Louisiana, may admit of definite identification on

the ground both as to location and quantity. But the main defect still remains, — the absence of any attempt at settlement and cultivation. These conditions have always been regarded as material by the various commissioners appointed to investigate these titles, and their decisions on the subject have been uniformly confirmed by Congress. They seem to be in accord with the laws and usages of the Spanish government; which laws and usages, from the first, were adopted as the proper criterion for determining the validity of titles emanating from that government.

These propositions will be corroborated by a reference to the laws which have been passed and the proceedings which have been taken in relation to French and Spanish titles in Louisiana.

That province was acquired by the treaty with France of April 30, 1803. Spain had ceded it to France by the treaty of St. Ildefonso, on the 1st of October, 1800; but did not deliver possession of it until after it was ceded to the United States. That portion of the territory west of the Mississippi, including New Orleans, was surrendered to our government on the 20th of December, 1803; but Spain retained possession of the remainder, east of the Mississippi, for several years longer, under the pretence that it belonged to West Florida, and made many grants of land in that time. The United States did not acquire entire possession of the country till 1813, though portions of it were occupied in 1810. Amer. State Papers, For. Relations, vol. ii. pp. 582, 575; vol. iii. p. 397; and Act of Congress, Feb. 12, 1813, 3 Stat. 472. The treaty with France required that the inhabitants should be protected in their liberty, property, and religion. In carrying out this stipulation the United States repudiated the grants of land made by the Spanish government subsequent to the treaty of St. Ildefonso, except when made in accordance with the known laws, usages, and customs of that government; which laws, usages, and customs had special reference to the colonization and settlement of the lands, and not to a sale of them for the purposes of revenue or speculation. Whilst repudiating the grants referred to, as of no binding obligation upon the United States, a liberal policy was adopted towards the grantees wherever they had actually set-

tled upon and cultivated their lands, and had thus in good faith complied, or attempted to comply, with the conditions upon which they were made. In carrying out this policy, it will be seen that all imperfect titles, such as orders of survey, permissions to settle, and the like, which had annexed to them the condition of settlement and cultivation of the lands as a prerequisite to a complete title, were rejected, if no attempt was made by the claimants to perform those conditions.

By the act of March 26, 1804, by which the ceded territory was organized into the territories of Orleans and Louisiana, whilst it was expressly declared that all grants made by the Spanish government, and all proceedings looking to a grant, made or taken after Oct. 1, 1800, should be deemed absolutely void, a provision was inserted for the confirmation, to the extent of one square mile, of all regular grants made to actual settlers, and of all *bona fide* acts and proceedings done by them to obtain grants, if the settlements were actually made prior to Dec. 20, 1803.

By the act of March 2, 1805, actual settlers who had only incomplete titles from the French and Spanish governments, issued prior to Oct. 1, 1800, and who actually inhabited and cultivated their lands on that day, were confirmed in their titles thereto, provided that they were heads of families or of age, and had fulfilled the conditions and terms on which the completion of the grants was made to depend. The act went further, and declared that all who, prior to Dec. 20, 1803, with the permission of the proper Spanish officers, and in conformity with the laws and usages of the Spanish government, had made an actual settlement of any tract, and did then actually inhabit and cultivate the same, should have such lands to the extent of one mile square to each person, with the customary addition for a wife and family. By the act of April 21, 1806, permission to settle was to be presumed, if the party had commenced an actual settlement prior to Oct. 1, 1800, and had continued actually to inhabit and cultivate the land for three years prior to Dec. 20, 1803.

The act of March 23, 1807, further provided that any person who, on the 20th of December, 1803, had for ten consecutive years been in possession of a tract of land not exceeding two

thousand acres, and not claimed by others, and was on that day resident in the territory, and had still possession, should be confirmed in his title thereto. The fourth section of this act gave the commissioners appointed, or to be appointed, for the purpose of ascertaining the rights of persons claiming land in the territory full power to decide, according to the laws and established usages and customs of the French and Spanish governments, upon all claims to lands in their respective districts, when made by those who were inhabitants of Louisiana on the 20th of December, 1803, and for a tract not exceeding one league square. By the eighth section they were to arrange the claims presented to them in three classes, showing: *first*, claims which, in their opinion, ought to be confirmed in conformity with the provisions of previous acts; *secondly*, claims which, though not embraced by those provisions, ought nevertheless, in the opinion of the commissioners, to be confirmed in conformity with the laws, usages, and customs of the Spanish government; *thirdly*, claims which neither were embraced in the provisions of previous acts, nor ought, in the opinion of the commissioners, to be confirmed in conformity with the laws, usages, and customs of the Spanish government.

By the act of April 25, 1812, that part of the ceded territory lying between the Mississippi and Perdido Rivers was divided into two land districts, one on the east, the other on the west side of Pearl River; and all persons claiming lands by virtue of grant, order of survey, or other evidence of claim derived from the French, British, or Spanish governments were required to deliver the same to the commissioner of the proper district, to be examined and recorded. By the fifth section of this act the said commissioners were empowered to inquire into the justice and validity of the claims presented, and to this end to ascertain in each case whether the lands claimed had been inhabited and cultivated; when surveyed, and by whom and what authority; and into every other matter respecting the claims which might affect the justice and validity thereof: and all evidence thus obtained was to be recorded. These claims they were to arrange into classes, and report them to the Secretary of the Treasury; and they were also to report a list of all actual settlers on the lands not having any claims derived from

prior governments, and the time when the settlements were made.

In pursuance of this act, and others in continuation of it, reports were made from time to time by commissioners appointed for the purpose. The first report from the St. Helena district, on the west of the Pearl River (where the lands in question are situated), was made in 1815. Amer. State Papers, Public Lands, vol. iii. pp. 89–76. Others were made Dec. 24, 1819, Nov. 18, 1820, July 24, 1821, Jan. 19, 1825, and Dec. 8, 1825. Id., vol. iii. pp. 436, 465, 505; vol. iv. pp. 538, 473. These reports presented classified lists or registers of the claims presented, as required by the act. In the report for 1815, for example, Register A exhibited a list of claims founded on complete grants derived from either the French, British, or Spanish governments, which, in the opinion of the commissioner, were valid agreeably to the laws, usages, or customs of such governments. This list embraced not only grants made before Oct. 1, 1800, but also grants made after that date whilst Spain continued in possession of the country. But the latter were either based on an order of survey made prior to Oct. 1, 1800, or were followed up by inhabitation and cultivation according to the laws and usages of the Spanish government. Register B exhibited a list of claims founded on incomplete titles only, such as orders of survey, permits to settle, &c., derived from either the French, British, or Spanish authorities, which, in the opinion of the commissioner, ought to be confirmed. The majority of these claims, the commissioner says, were originated by the Spanish authorities prior to the purchase of Louisiana by the United States, and, agreeably to the laws, usages, and customs of the then existing government, would have been completed by the same power which granted them. Some were issued subsequently to the purchase. In relation to these, the decision in their favor was not predicated upon the validity of the orders of survey, but simply upon the fact that the parties had occupied and cultivated their lands, and had complied with all the requisitions of the government which at that time exercised ownership over the soil. Amer. State Papers, Public Lands, vol. iii. p. 66. Registers C and D contained a list of grants and orders of survey made after the cession to the United States, and not

in the regular way, according to the laws and usages of the Spanish government, and, generally, not followed by any habitancy or cultivation of the lands. These grants and orders of survey were mostly of a speculative character, many of them being for large tracts, obtained at a few cents per acre, and evidently made for the purpose of getting as much as possible out of the precarious and disputed title by which the Spanish government still held possession of the country. The reports also contained a list of actual settlers upon the lands, who had no written title to show.

This report, with some qualifications, was confirmed by the act of March 8, 1819. 3 Stat. 528. The claims founded on complete grants, and contained in Register A, were all confirmed. As to those founded on orders of survey, permission to settle, &c., which the commissioners reported in favor of, the act confirmed such of them as were derived from the Spanish government prior to the 20th of December, 1803, and when the land was claimed to have been cultivated and inhabited on or before that day; and as to the remainder, declared that the claimants should be entitled to grants by way of donation, not to exceed twelve hundred and eighty acres to any one person. The act also made a donation of six hundred and forty acres to each actual settler who had no written title. This provision included most of the persons who had settled on the tract in question in this case.

Subsequent reports and confirmations were made; but the above is a fair sample of all, and evinces the principles upon which the government proceeded in confirming titles derived from the French and Spanish governments. They are cited for the purpose of showing, and we think they conclusively show, the fact that the government of the United States has always regarded the condition of inhabitancy and cultivation, annexed to imperfect titles derived from the Spanish government in the Louisiana territory, as material and essential, and as having this character by the laws and usages of that government.

We might have rested for the conclusion thus reached upon a line of cases decided by this court, and concisely summed up by Mr. Chief Justice Taney, in the able opinion delivered by

him in the case of *Fremont* v. *United States*, 17 How. 553–556. But as it seems to be thought that every semblance of title or concession, however stale, and without regard to conditions of whatever kind, has been revived and validated by the act of 1860, we have preferred to review the original grounds upon which the policy of the United States government, with regard to these Spanish and other grants, was based, and to show what that policy really was. Mr. Chief Justice Taney, speaking of these incomplete titles in Louisiana and Florida, with very accurate knowledge of the subject, says: "These grants were almost uniformly made upon condition of settlement, or some other improvement, by which the interest of the colony, it was supposed, would be promoted. But until the survey was made no interest, legal or equitable, passed in the land. The colonial concession granted on his petition was a naked authority or permission, and nothing more. But when he had incurred the expense and trouble of the survey, under the assurances contained in the concession, he had a just and equitable claim to the land thus marked out by lines, subject to the conditions upon which he had originally asked for the grant. But the examination of the surveyor, the actual survey, and the return of the plat were conditions precedent, and he had no equity against the government, and no just claim to a grant until they were performed; for he had paid nothing, and done nothing, which gave him a claim upon the conscience and good faith of the government."

We have been referred to some cases decided by this court which are supposed to treat the conditions contained in these titles as of no importance, and as not necessary to be performed. But it will be found that these cases relate to perfected grants, or that they are otherwise distinguishable from cases like that now under consideration.

The first is *Chouteau's Heirs* v. *United States*, 9 Pet. 147. The condition in that case related to the number of cattle which the grantee ought to have, according to Governor O'Reilly's regulations, in order to be entitled to the lands claimed by him. The grant had, in fact, been made; and the court rightly held that this was a preliminary condition, and that the fact that the applicant possessed the requisite amount

of property to entitle him to the land he solicited was submitted to the officer who decided on the application, and that he was not bound to prove it to the court which passed on the validity of the grant.'

The next case is *United States* v. *Aredondo and Others* (6 id. 691), in which there was a complete grant of title, with a condition subsequent that the grantee should establish on the lands granted two hundred Spanish families, and begin the establishment within three years, no time being fixed for its completion. It was begun in the prescribed time, but its completion was prevented by the change of government. The court held that, in equity, the doctrine of *cy pres* would be applied to relieve the grantees from that strict performance which a court of law would require. The performance was held to have become impossible by the act of the grantor.

The next case is *United States* v. *Sibbald*, 10 id. 313. A concession had been made by the governor of East Florida of a right to build a saw-mill, and of sixteen thousand acres of land to supply the same with timber, with a condition that the grant for the land should not take effect until the mill was erected. The land was duly surveyed, and various attempts were made to complete the mill, which were frustrated by floods and other accidents. It was not completed until 1827, some time after the United States had acquired possession of the country. The court sustained the grant, holding that there was no time limited for erecting the mill, that it was completed in sufficient time, and that, in equity, it would have been sufficient to show a performance *cy pres*. Doubts were, indeed, expressed whether the court was authorized to give effect to a condition of forfeiture where the land had been legally granted; but that point was not necessarily involved in the case.

Hornsby v. *United States*, a California case (10 Wall. 224), is also referred to. There a decree for a concession had been duly made, with direction for a grant to issue, and the formal grant had issued accordingly, containing the usual conditions, that the grant should be approved by the departmental assembly, and that the grantees should solicit the proper judge to

give them judicial possession, marking the boundaries with proper land-marks, &c. The quantity granted was nine square leagues of the surplus of a certain ranche, after satisfying two former grants. Judicial possession had not been obtained when the United States took possession of the territory, which happened about sixty days after the grant had been made. This was held a sufficient excuse for not complying with that condition. The opinion says: "The court cannot inquire into any acts or omissions by them [the grantees] since those authorities [the Mexican authorities] were displaced. It is not authorized to pronounce a forfeiture for any thing done or any thing omitted by them since that period." p. 289. As to the condition of obtaining the confirmation of the departmental assembly, it was held that this was the duty of the governor, and not of the grantee; and that as the conditions were all conditions subsequent, the estate could not be defeated by the governor's neglect. It was further held that the grant, in that case, being a full and perfect grant for so many leagues in a certain locality, to be surveyed by the officers of the government, could not fail for want of the survey being actually made: that mere neglect to comply with the conditions did not work a forfeiture, which could only be set up after a denouncement, or some other formal act indicating an intention on the part of the sovereign to resume proprietorship of the land.

There is nothing in any of these cases inconsistent with the assertion of the forfeiture in the case before us. Here no title was granted: nothing but a permit to inhabit and cultivate as preliminary to a grant. It might have ripened into an equitable title had the conditions been fulfilled, or even if a fair effort had been made to fulfil them, or if any plausible excuse could be offered for their non-fulfilment. But no attempt even appears ever to have been made to fulfil them; and the government proceeded to make other dispositions of the land. There is no need of any more formal assertion by the government of its right to resume the proprietorship. This court has in several cases maintained the doctrine that an actual entry or office found is not necessary to enable the government to take advantage of a condition broken, and to resume the possession

of lands which have become forfeited. It was so held in *United States* v. *Repentigny's Heirs*, 5 Wall. 211; *Schulenberg* v. *Harriman*, 21 id. 44; and *Farnsworth* v. *Minnesota & Pacific Railroad Co.*, 92 U. S. 49. In *Repentigny's Case* the court says: "The mode of asserting or assuming the forfeited grant is subject to the legislative authority of the government. It may be after judicial investigation, or by taking possession directly, under the authority of the government, without these preliminary proceedings. In the present instance, we have seen the laws have been extended over this tract, the lands surveyed and put on sale, and confirmed to the occupants or purchasers, and, in the mean time, an opportunity given to all settlers and claimants to come in before a board of commissioners and exhibit their claims. This is a legislative equivalent for the reunion by office found." The same doctrine was applied, in the case of Farnsworth, in relation to a grant of lands and privileges for the construction of a railroad.

In the case before us, if any act of the government was necessary to indicate a resumption of the grant for a non-compliance with its essential conditions, nearly all the volumes of the Statutes at Large, and of the State Papers relating to public lands for a period of twenty years, could be cited to show it.

We think that the claim was properly rejected, both by the commissioners in 1825, and by the court below, and that there is nothing in the act of 1860 which can be justly relied on for sustaining it.

Decree affirmed.

UNITED STATES v. WATKINS.

BEINGIER v. UNITED STATES.

1. Where a grant of lands, made pursuant to a sale of them, and describing them by metes and bounds, according to a previous regular survey, was made by the Spanish Intendant, March 5, 1804, when, according to the views of the government of the United States, the title to Spain had terminated, but while she was in actual possession, and claimed the sovereignty of that part of Louisiana where the lands are situate, — *Held*, that the grant is subject to confirmation, under the act of June 22, 1860, entitled "An Act for the final adjustment of private land-claims in the States of Florida, Louisiana, and Missouri, and for other purposes." 12 Stat. 85.
2. Where the original documents to support a claim under said act are not produced, and there is no just ground to suspect their genuineness, the record of them, made by the proper commissioner, to whom the claim was originally presented, is sufficient *prima facie* evidence of their contents.
3. A. and B., assignees of the party to whom the grant was made in 1804, filed, under said act, a petition in the District Court praying for the confirmation of their claim covering lands, portions of which had been donated by the United States to settlers. Due proof was made of the grant and assignment; but it appeared that B. had conveyed his interest thereunder to C. A decree was passed dismissing the petition as to B., confirming the right of A. to one undivided half of so much of said lands whereto the title remained in the United States, and awarding him certificates of location equal in extent to one undivided half of the residue of said lands. *Held*, 1. That the decree was proper. 2. That "sold," where it occurs in the sixth section of said act, is of equivalent import with "sold or otherwise disposed of."

APPEALS from the District Court of the United States for the District of Louisiana.

The facts are stated in the opinion of the court.

The Solicitor-General, for the United States.

Mr. Willis Drummond and *Mr. Robert H. Bradford*, *contra*.

MR. JUSTICE BRADLEY delivered the opinion of the court.

This case is very different from the preceding, being based upon a complete and perfect title, bearing date the 5th of March, 1804. This title consists of a Spanish grant, made by the Intendant Morales to one Charles Ramos, for twenty thousand arpents of land, situated in the St. Helena portion of Baton Rouge district, on the Amite River, and described by certain

metes and bounds, according to a survey thereof which had been previously regularly made. The grant was made in pursuance of a sale of the land; and, although made according to the views of our government after the title of Spain had ceased to exist, yet it was made whilst that government had actual possession of the country and claimed the sovereignty thereof; and, therefore, it is within the purview of the act of 1860, and comes clearly within the case of *United States* v. *Lynde*, 11 Wall. 632.

The government, however, questions the evidence by which the grant and other documents of title were proved before the District Court. The originals were not produced; but only certified copies of the record thereof, made and preserved by the commissioner for examining land titles for the district where the lands are situated. The claim and the evidence connected therewith were presented to said commissioner in 1814; and this evidence, including the grant, was recorded by him as required by law. He reported against the confirmation of the grant, on account of its being based on a sale, and not competent for the Spanish government to make. Amer. State Papers, Public Lands, vol. iii. pp. 58, 66. His records, however, have been preserved, and turned over to his successors, in whose possession they now are. We think that these records are competent evidence. The fourth section of the act of April 25, 1812 (2 Stat. 715), required every claimant of land in the district in question to deliver to the commissioner a notice of his claim in writing, together with a plat (in case a survey had been made) of the tracts claimed; and to deliver also, for the purpose of being recorded, every grant, or order of survey, deed, conveyance, or other written evidence of his claim; and it was directed that the same should be recorded by the clerk, in books kept for that purpose, on receiving the prescribed fees therefor. The fifth section required the commissioner to record, in like manner, the evidence adduced before him in reference to the justice and validity of each claim. Abstracts of this evidence, and the decision of the commissioner thereon, were to be transmitted to the Secretary of the Treasury. By the seventh section of the act of 1860, under which the present proceedings are had, it is provided, "That whenever any claim

is presented for confirmation, under the provisions of this act, which has heretofore been presented, before any board of commissioners under authority of Congress, the facts reported as proven by the former board shall be taken as true *prima facie;* and the evidence offered before such former board, and remaining of record, shall be admitted on the examination of the claims made under the provisions of this act."

This seems to be conclusive on the point. If the non-production of the original documents is, in any case, accompanied by such circumstances as to raise a suspicion of their genuineness, the question of the sufficiency of the record may be properly raised. But in the absence of any such suspicion, the record is sufficient evidence, *prima facie*, of the documents it contains. We think the objection cannot be sustained.

Other questions raised in the case depend upon the disposition of the property subsequent to the original grant. On the 8th of March, 1804, three days after the date of the grant, Ramos conveyed the property to William Simpson and John Watkins. The petitioners in the case are, — 1st, the heirs of Watkins; 2d, Melanie Bringier, formerly the widow of Simpson, and who, in the original petition, claimed his half of the lands as his sole legal heir. The claim of Watkins's heirs to represent him seems to be sufficiently substantiated. The case also shows a duly certified copy of the will of William Simpson, dated Jan. 16, 1818, which was duly executed and proved in New Orleans, and by which he gave and devised to his wife, Melanie Bringier Simpson, all his estate and property, with the exception of a few trifling legacies. But a supplemental and amended petition was filed in the case, by which Melanie Bringier admits that it had come to her memory and notice that, on or about the year 1813, she sold to James Innerarity, for a valuable consideration, all her right and interest in the succession of her then recently deceased husband, William Simpson; which conveyance, she acknowledges, seems to estop her from claiming the undivided moiety of the lands, unless for the use and benefit of the said Innerarity, his heirs or legal representatives. She claims, however, that Innerarity was the testamentary executor of her husband, and was then engaged in settling his estate, which consisted mostly of the shares held by him in the extensive

house of John Forbes & Co., of which John Forbes, Innerarity, and Simpson were the partners. [The report of Commissioner Cosby shows (Amer. State Papers, Public Lands, vol. iii. p. 58) that the claim under the Ramos grant was presented to him in 1814, by the heirs of Innerarity.] The supplemental petition proceeds to say, "that it was an old-established maxim of said house that no partner could hold real estate purchased by him as separate property, but that it should belong to the house jointly; that, in the year 1814, it appears that the said Innerarity in presenting the land claim now sued on to the United States commissioner for land claims west of Pearl River, only claimed for himself, or the estate of William Simpson, 4,750 arpents, and stated in his notice of claim that 1,000 arpents belonged to the widow of Carlos Ramos, and 4,750 other arpents to John Lynde; that the transactions of those early days are involved in doubt and perplexity, and that the memory of your petitioner, after the lapse of more than half a century, fails to recall them clearly.

"Wherefore, if said title to said moiety of said lands sold by Charles Ramos to said Simpson, and devised to Melanie Bringier in his said will, has in fact been conveyed from her to said James Innerarity, either in his individual capacity or as a partner in the house of Forbes & Co., and whether the same is now vested in the legal representatives of said house, or the legal representatives of James Innerarity, or in them jointly with those of Ramos and Lynde, or in whomsoever the same may be vested in law or equity, if not in your petitioner, that then and in such case your petitioner acknowledges that she prosecutes this suit for the sole use and benefit of the said legal representatives of said Innerarity, or of them jointly with those of the house of Forbes & Co., the widow Ramos, and John Lynde, or for the sole use and benefit of whoever may hereafter be decreed to be the true, legal, and equitable owner of said lands."

Wherefore the petitioners prayed that the petitioner Melanie Bringier might be allowed to prosecute the suit to final decree, for the sole use of those who in a proper legal proceeding might establish their rights contradictory to her under the sale from her to said Innerarity, in case said sale should be held valid, and to embrace said land.

To this supplementary petition a demurrer was interposed, which was sustained by the court below, and judgment was given for one half of the grant in favor of the heirs of Watkins, and for the United States as to the other half. The United States appealed from the first part of the decree, and Melanie Bringier appealed from the latter part.

We see no reason for sustaining the appeal of the government. The fact that Simpson and Watkins were tenants in common of undivided moieties in the land, can produce no inconvenience in making a decree in favor of Watkins's heirs for one-half of the amount of land in controversy. All, or nearly all of it, has been disposed of by the government, and the requisite amount of certificates of location can be awarded to them for their share therein. This they ask, and it is equitable and just that they should have it.

As to the share of Simpson, there is greater difficulty. By the admission of Melanie Bringier, she has parted with all title to the lands. It is evident that no decree can be made in her favor. The heirs of Innerarity have already been before the court, and their claims have been rejected. *United States* v. *Innerarity*, 19 Wall. 595. On the whole, we think that the decree of the District Court ought to stand.

As to the point made by the government, that the lands in question were not sold by the United States to third parties, but were donated to settlers thereon; and that, therefore, the case does not come within the words of the act of 1860, granting to successful claimants other public lands in lieu of those claimed, we do not think that this objection is tenable. If the government has disposed of the lands in any manner, we think the fair interpretation of the act is, that the claimant should have other lands in lieu thereof. As we have so held in several other cases, we do not deem it necessary to discuss the subject further. The act may well be construed alongside of other acts *in pari materia*, where the words "sold or otherwise disposed of" are expressly used. They are all within the same mischief and the same reason.

Decree affirmed.

HYNDMAN v. ROOTS.

This case involves merely questions of fact; and the court finds that letters-patent No. 106,165, granted Aug. 9, 1870, to William G. Hyndman, for an "improvement in rotary blowers," infringe the first, second, third, and fourth claims of reissued letters-patent No. 3570, granted July 27, 1869, to P. H. Roots and F. M. Roots, for an "improvement in cases for rotary blowers," upon the surrender of original letters No. 80,010, dated Aug. 11, 1868.

APPEAL from the Circuit Court of the United States for the Southern District of Ohio.

The facts are stated in the opinion of the court.

The drawings of the machines of the respective parties therein referred to are as follows: —

P. H. & F. M. ROOTS.

ROTARY BLOWER CASE.

Reissued July 27, 1869.

No. 3570.

Fig. 1.

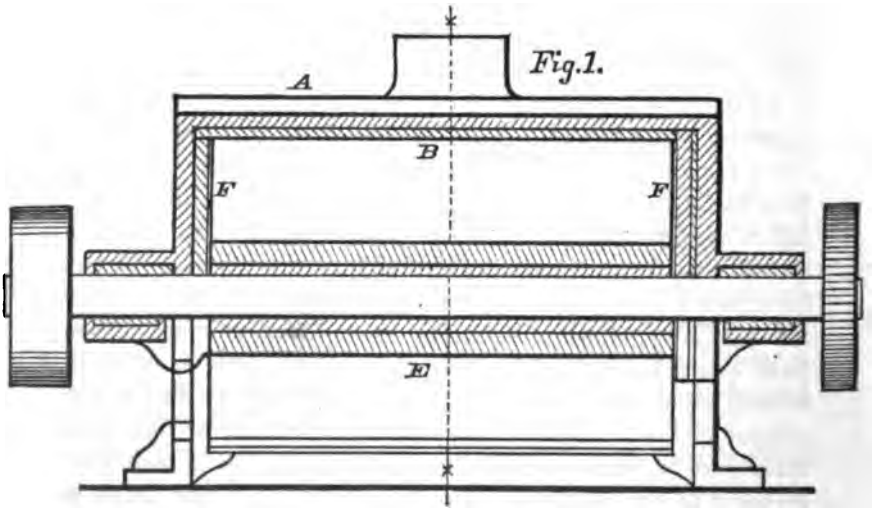

Fig. 2.

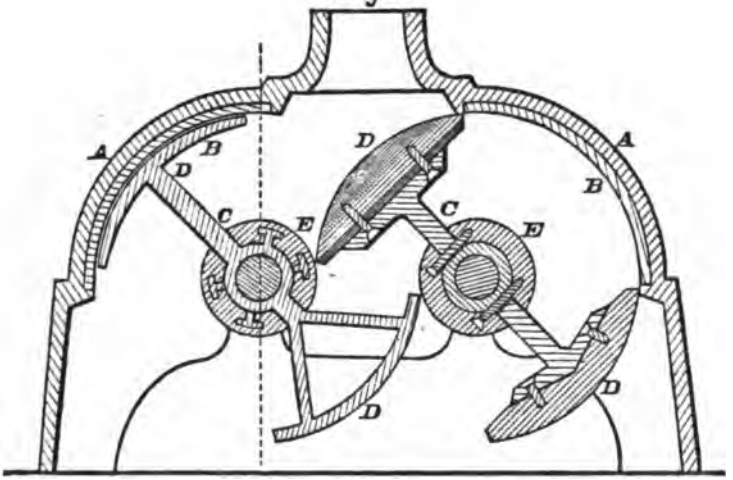

W. G. HYNDMAN.

ROTARY BLOWER.

Patented Aug. 9, 1870.

No. 106,165.

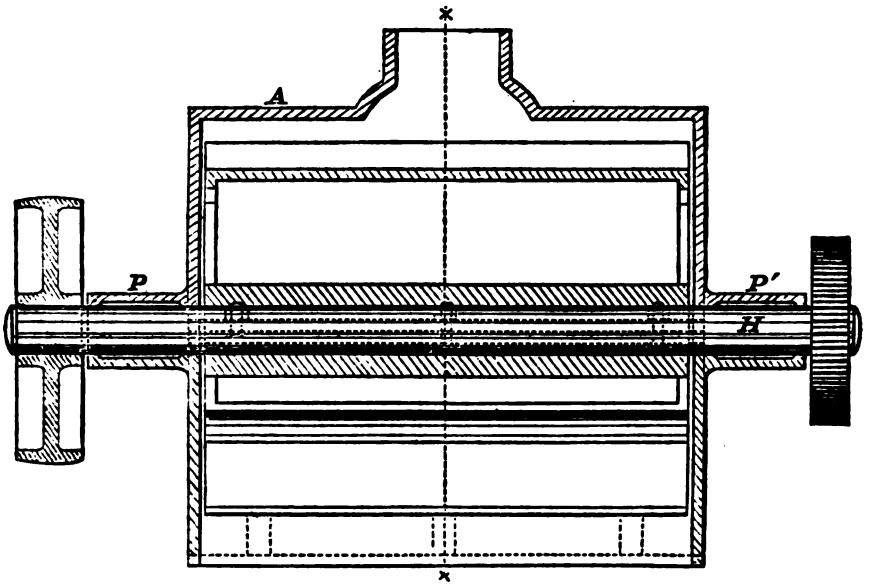

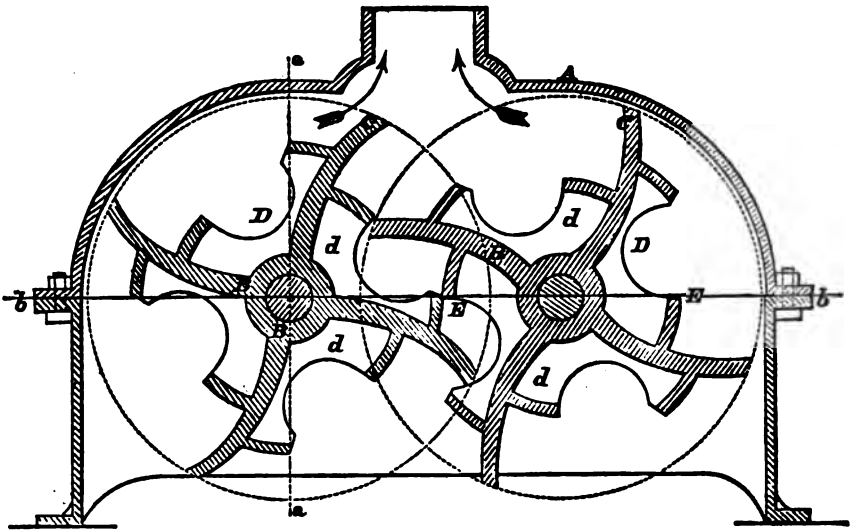

Mr. E. E. Wood for the appellant.
Mr. James Moore, contra.

MR. JUSTICE SWAYNE delivered the opinion of the court.

This is a case in equity. The bill is founded upon two patents. One of them is reissue No. 8570. It bears date on the 27th of July, 1869. The original of this reissue — No. 81,010 — bore date on the 11th of August, 1868. The other patent is dated June 21, 1870. It is numbered 104,585, and was issued to the appellees as the assignees of Hardy and Wood, the alleged inventors.

The bill was dismissed, as to this latter patent, at the hearing, and no appeal was taken. It may, therefore, be laid out of view, and will not be again adverted to. The other original patent and the reissue are for improvements in cases for rotary blowers.

The bill charges infringement, and prays for an injunction and a decree for profits and damages. The answer denies the novelty of the alleged invention; denies that the reissue is for the same thing as the original patent; denies that the complainants were joint inventors, if inventors at all; and denies infringement.

Such were the issues made by the appellant in the court

below. That court found all of them in favor of the appellees, and decreed accordingly.

Here the same points have been insisted upon.

In relation to all of them, except the one last mentioned, we deem it sufficient to say that we concur with the court below. We think the evidence leaves no room for a reasonable doubt as to either of them. The questions are questions of fact. No legal proposition is involved. To analyze the testimony in order to vindicate our conclusions would serve no useful purpose. Our further remarks will be confined to the subject of infringement. That is the hinge of the controversy between the parties.

It is difficult to convey clear ideas of complex machinery by any description that can be given. Drawings are more effectual, and models are still more so. If the model be full and accurate, it is, indeed, the thing itself in miniature.

The appellees, as the case is before us, confine their claims to improvements in the shell or case of blowers. The internal mechanism is in no wise in question. They say the objects of their invention were to avoid the necessity of boring out the interior concave surfaces of the case, and of facing off or planing the head-plates, and to render it practicable to cast the entire outside casing in one piece. They describe two modes of making the blower-heads true. One is to form them into planes at right angles to the shafts of the abutments, parallel with each other, equidistant from each other in all their parts, by giving to the inner surface of each plate a coating of plaster of Paris, hydraulic cement, or other material, having like plastic properties. This is suited to blowers of the smaller sizes. When this method is used, the plaster of Paris may be put on while in a plastic condition, by means of a sweep made to turn in the boxes of the blower-shafts, so that it will shape the linings of the ends as may be desired.

The second method is to use inside or secondary metal plates made in their outlines to conform to the interior of the case, and to face or plane them off so as to make them perfectly true. A space is left between these secondary plates and the ends of the case, which is filled with plaster of Paris of the proper consistency. After the plaster has set, the plates are secured

in their places in any suitable manner. In making the inner surface of the arcs of the case true, the usual way of the patentees is to work from the centre of the shaft-journals as fixed points.

They give the inner part of the concaves a coating of plaster of Paris, and work it into the proper shape and proportions while it is setting, by means of a sweep attached to a shaft turning in the journal-boxes of the blower, as in the case of the head-plates when plaster is applied to them. While the plaster or other similar material is becoming set, they slowly move the sweep, so as to give the coating exactly the required shape and thickness. Sometimes, instead of using the sweep, they use a cylinder of a diameter corresponding with the sweep or the circles to be described by the pistons. The cylinder is hung on a central shaft resting in the journal-boxes. The plaster is then poured into the intervening space between the cylinder and the case and the "metal guards,"—which are small projections on the inner surface of the case, intended to support the coating. When the plaster is set the cylinder is removed, and leaves the required arcs of a circle.

They do not cast very large blowers in a single piece. Those ordinarily used by blacksmiths and medium-sized foundry blowers are so cast.

If the case of a rotary blower be cast in one piece, it is necessary that the concave arcs of the case should be of such dimensions, and so placed on one side of the plane of the axis of the shafts, as to allow the removal of enough of the head-plates of the case to afford a sufficient opening for the introduction or removal of the abutments without interfering with any part of the case otherwise than to remove or replace the boxing which holds the shafts. By making the concave arcs a little more than a quarter of a circle, and placing them chiefly on one side of the plane of the shafts, the opening on the opposite side of the plane is correspondingly increased, allowing ample room for putting in and taking out the abutments, and also allowing the reduction of the end-plates on the open side of the plane, where they would otherwise interfere. If the concave arcs were materially increased and divided near equally on the

two sides of the plane of the shafts, the abutments of a case so made could not be taken out or replaced without taking the case apart, and the case would need to be made accordingly.

The claims are, —

1. A rotary blower-case, the interior of which is made true by means of plaster of Paris, or its equivalent, applied as described.

2. Such a blower-case, the ends of which are made true by the application of plaster, or a like material, as described.

3. Such a blower-case, the concaves of which are made true by the use of such material, applied as described.

4. Such a blower-case, having the concave arcs in combination with the end-plates, so arranged as to admit of the abutments being introduced or removed without requiring the case to be taken apart, as described.

5. A rotary blower-case, the ends of which are made true by the use of secondary inside metal plates, as and for the purposes described.

6. The metal guards in the inside of the concaves, as described.

The specification sets forth in strong terms the great value of the invention claimed.

There is a marked difference between a fan blower and a rotary blower. They operate on different principles. The former makes from one hundred to three hundred revolutions per minute; the latter, from three thousand to six thousand in the same time. The appellees are the original inventors of the rotary blower. Such is their proof, and there is none to the contrary. Its value in the useful arts is evinced by its tested capabilities, and the ardor of this litigation. No patent of the appellees is in any wise involved in this controversy but the one we have analyzed.

The appellant has a patent also. It bears date on the 9th of August, 1870, and is No. 106,165. It covers both the shell or case and the inner machinery. The claims are for, —

"1. The blower-case A, made to support the abutting pistons, the circle or sweep of which in the surrounding case is lined with a cement of beeswax and resin or brimstone, retained

without the use of guards or ledges; all substantially as herein set forth.

"2. The pistons B B, composed of the blades C C, guards E E, concavities D D, with the lining applied in a liquid condition, while heated, to form a continuous contact of the blade surfaces; all substantially as herein set forth."

The specification refers three times to the invention of the appellees. It says, with respect to the shell, "the upper section is cast in one piece, without the ordinary guards or ridges used to hold a lining, such as is set forth in the patent of P. H. and F. M. Roots, dated Aug. 11, 1868. . . . I am aware blower-cases have been made, all cast in one piece, such as are shown in the patents of P. H. and F. M. Roots. I do not, therefore, claim a blower-case broadly. I am also aware that plaster of Paris has been used in lining blower-cases, as described in the patents of P. H. and F. M. Roots of Aug. 11, 1868. I do not, therefore, claim the lining of blower-cases broadly. What I do claim is," &c. He then sets forth his claims as we have quoted them.

It is difficult to read the specifications of the parties in the presence of the models, and resist the conviction that the appellant has carefully studied the invention of the appellees as described in their reissue, not with any view to its improvement, but solely for the purpose of evasion. It is not, however, what the appellant has said in his specification with which we have to do in this controversy. What he has done affecting the rights of the appellees is the material point, and we pass to the consideration of that subject. His patent is not without value as an auxiliary in that process.

The appellees' first, second, and third claims, with respect to the alleged infringement, may be considered together. They are for truing the interior of the case by means of plaster of Paris, or its equivalent, applied as described; for truing the end-plates in the same way, and for truing the concaves or arcs of the circles by the same means. The material to be used is "plaster of Paris, hydraulic cement, or other material having the properties referred to." These properties are plasticity when the material is applied, and firmness and brittleness afterwards. The reducing or truing process is also included

in these claims. The appellant did all that is embraced in these claims. What was done differs in nothing from the process and other means employed by the appellees, except that he used a compound of glycerine and litharge instead of plaster of Paris. The former is a mere equivalent for the latter. Both are plastic when applied. Both become indurated afterwards. No chemical change takes place in either, and time alone is necessary to produce the desired hardness of the substance. The compound used by the appellant is clearly within the alternative terms of the specification of the appellees in this respect. The proofs in the record on all these points are so conclusive, that it would be a waste of time to pursue the subject further. The appellant is guilty of infringing these claims.

The essence of the fourth claim is a combination of the arcs with the end-plates, so arranged as to permit the abutments to be put in or taken out without taking the case apart. The peculiar features and advantages of what is embraced in this claim are clearly set forth in the testimony in the record.

The end-plates have no contraction at the opening for the admission of air. They therefore permit, without further change, so far as they are concerned, the removal of the pistons. The concave arcs are reduced to less than half a circle, and so provide at the air entrance a space sufficient to permit the introduction or withdrawal of the pistons without disturbing the case. The introduction of the sweep, and its necessary operation upon the plastic material, are, also, thus provided for. The air entrance, which is bounded by the ends of the arcs and the end-plates, permits the lining to be renewed at pleasure. The case, by reason of the contraction of the arcs and the configuration of the end-plates, permits the requisite shaping of the plastic material by sweeps or otherwise, so as to make the arcs perfectly true, and the end linings exactly at right angles with them. All the difficulties previously experienced in the construction of double-cylinder rotary blowers are thus obviated. This is regarded as an important result.

Turning now to the appellant's shell or case, the evidence

shows that the concaves or arcs are less than half a circle in extent. The revolving pistons act against them in combination with the end-plates, which have no interior projections. The entire case is such as to admit of its being cast in one piece, and to admit also of the introduction and removal of the pistons, without the case being taken apart. It is of such a character as to permit in its complete state the introduction of the sweep, and its full operation upon the plastic material intended to be applied to the arcs and the end-plates. This is regarded as one of the most valuable features of the appellees' invention. The appellant's case is cast in two parts. There is a joint or division on the axial plane through the journal-boxes. It is in proof that this is neither reasonable nor necessary. Where the case is large, and too heavy for convenient handling, it may be useful, and for such cases it is suggested in the patent of the appellees. The patent of the appellant prescribes it for all his cases, and he so makes them. Why is this, and what are his object and purpose? We can imagine none but to gather where another had sown, and escape by simulation and subterfuge the consequences which the act of Congress has prescribed for the unlawful appropriation of such property. There is scarcely a thought expressed in the work of the appellees, so to speak, that is not found substantially transferred or closely copied in that of the appellant.

The points of identity are palpable and conclusive. The proofs leave no doubt in our minds that the appellant is guilty of the infringement of this claim, as well as of the first, second, and third. This controversy does not concern the appellees' fifth and sixth claims.

Decree affirmed.

UNITED STATES v. MCKEE.

MCKEE v. UNITED STATES.

In 1864, A. entered into two contracts with the United States to deliver a specified number of tons "of timothy or prairie hay" at Fort Gibson, and other points within the Indian Territory, which was then the theatre of hostilities. Each contract contained this clause: "It is expressly understood by the contracting parties hereto, that sufficient guards and escorts shall be furnished by the government to protect the contractor while engaged in the fulfilment of this contract." He cut hay within that Territory; and payments were made to him for that which he delivered and for that which, with other personal property, had been destroyed by the enemy. Having been prevented by the enemy from there cutting all the hay necessary to fulfil his contract, he sued to recover an amount equal to the profits he would have made had the contract been fully performed; and he alleged that the United States did not "furnish sufficient guards and escorts for his protection in the cutting and delivery of said hay." The United States set up as a counter-claim the amount paid him for the loss of the hay and his other personal property. The Court of Claims gave judgment for the claimant, allowing in part the counter-claim. Both parties appealed here. *Held*, 1. That the contract was for the sale and delivery of hay, and not for cutting and hauling grass. 2. That the obligation of the United States to A. was not that of an insurer against any loss he might sustain from hostile forces, but to protect his person and property while engaged in the effort to perform his contract. 3. That A. was entitled to the full value of the property actually lost by him, and having been paid therefor, his petition and the counter-claim should be dismissed.

APPEALS from the Court of Claims.

The facts are stated in the opinion of the court.

Mr. Assistant-Attorney-General Smith, for the United States.
Mr. S. W. Johnston, contra.

MR. JUSTICE MILLER delivered the opinion of the court.

McKee had two separate written contracts with the quartermaster's department for the delivery of hay during the summer of 1864. The delivery in the one contract to be at Fort Gibson, of a part of the hay, and of another part at, or within seven miles of, that fort, and in the other, at Cabin Creek and Hudson's Crossing of the Neosho River. The locality was the Indian country, south of Kansas and west of Arkansas, which was the theatre of hostilities. Each contract contained the fol-

lowing provision, which is the foundation of plaintiff's claim against the United States now under consideration:—

"It is expressly understood by the contracting parties hereto, that sufficient guards and escorts shall be furnished by the government to protect the contractor while engaged in the fulfilment of this contract."

A large part of the contract was fulfilled by delivery of the hay, and for that McKee was paid. A considerable amount of hay, cut and not delivered, was destroyed by the enemy, and for that he was paid. He lost in wagons, horses, and other personal property, by the attacks of the enemy, over $15,000, and for that he was paid.

In addition to this he claims now, and was allowed by the Court of Claims, as profits on the contract for hay never delivered or even cut, $29,559. From this judgment the United States appeals.

The United States made in the court below a claim of set-off for $34,713 wrongfully paid to McKee for his hay destroyed and abandoned before delivery, and for his property lost and destroyed while used in the operation of making and delivering the hay. Of this the Court of Claims allowed the sum of $12,600, and from this part of the judgment McKee appeals.

The opinion of the majority of the Court of Claims, which we find in the record, goes upon the ground that the soil upon which the hay was to be cut was the property of the United States, and that the contract was in legal effect, on the part of McKee, to do for a specified compensation the work which was necessary to convert the grass of the United States into hay, and for its delivery as required. That this compensation was not for the purchase of the hay from McKee, but for his labor and services expended on the property of the United States. The deduction is made from this proposition, that inasmuch as he was ready and willing at all proper times to render these services and perform the labor, and was prevented by the failure of the United States to give him the necessary protection, he is entitled to recover all that he would have made out of the contract if he had fully performed it.

We do not see on what foundation it is held that the grass

was the property of the United States. The court expressly find, that the whole transaction was in the Indian Territory, south of Kansas and west of Arkansas. We know that this is country set apart for the use of the Cherokee, Choctaw, Chickasaw, and other Indian tribes, by treaties, those tribes having been removed there from other localities. We suppose that the possession and usufruct of this land are in the Indians. But if this were otherwise, and it was surveyed and unsold public land, there is nothing in the contract to show that any importance was attached to this fact.

The contract was for the delivery of so many tons of hay. It was expressly provided that it might be timothy hay or prairie hay. Had the United States any timothy meadows in which these men were to make hay? If they could have bought the hay from another party and delivered it, would they not have fulfilled their contract? It was clearly a contract for the sale and delivery of hay, and not for cutting grass and hauling it into the fort.

What then was the obligation assumed by the government in agreeing to furnish sufficient guards and escorts to protect the contractor while engaged in the fulfilment of the contract?

The literal terms of the agreement would be satisfied by such a guard as would secure his personal safety, and if such a construction had been insisted on by the government from the beginning, it would not be void of force.

The construction which the government has put upon it, namely, that it is an obligation to protect his person and property while engaged in the effort to perform the contract, and that the failure to afford such protection renders the United States responsible for the value of the property actually lost for want of it, and which would include, perhaps, personal injuries, if any had been sustained, seems to us to be the true one. It was all the contractor could reasonably ask. It is doubtful whether the contracting officer had authority to promise so much. But to this extent the accounting officers of the government and the quartermaster-general have ratified and confirmed it.

But we can see nothing in the provision itself, nor in the

other parts of the agreement, nor in the nature of the circumstances under which it was made, to justify the conclusion that the government was bound as an insurer against all loss from hostile forces, not only arising from destruction of property, but from loss of speculative profits on grass that was never cut and hay that was never made or delivered or owned by the contractor, and for work that was never done.

Let us suppose that such had been the prevailing force of the enemy that the soldiers could only hold the fort and do no more, and such the danger outside that the contractor did not dare to cut a ton of hay, could he, by demanding an additional regiment to protect him, and saying I am ready to make the hay if you will keep off the enemy, make a speculative calculation of the profits he would have made if his demand had been complied with, and recover that sum, though he had never done any thing more?

If the United States was bound by the contract to furnish full protection, and if the measure of damages was these profits, the question must be answered in the affirmative.

But, as we have already said, we are of opinion that the true measure of damages was the actual value of the property lost by the contractor; and as the government recognized and acted on this rule, we do not think McKee is entitled to recover for his supposed profits, or that the government should recover of him what it has paid him for these actual losses. The result of these views is, that the judgment of the Court of Claims is reversed, with directions to dismiss both the petition of claimant and the counter-claim of the United States; and it is

So ordered.

LILIENTHAL'S TOBACCO *v.* UNITED STATES.

1. The ninth section of the act of July 13, 1866 (14 Stat. 133), imposed upon "smoking-tobacco sweetened, stemmed, or butted, a tax of forty cents per pound," and "on smoking-tobacco of all kinds not sweetened, nor stemmed, nor butted, including that made of stems, or in part of stems," fifteen cents per pound. *Held*, that a mixture of smoking-tobacco, consisting of leaves from which the stems had been removed, and of stems so manipulated as to be undistinguishable from the leaf, — the proportion of stems and leaves being the same which they originally bore to each other, — was liable to a tax of forty cents per pound, as smoking-tobacco stemmed or butted.
2. Under the act of March 3, 1865 (13 id. 477), a manufacturer returned such smoking-tobacco for taxation at thirty-five cents per pound, and after the passage of the act of July 13, 1866 (*supra*), at forty cents per pound, until Aug. 20, 1866, when he somewhat increased the proportion of stems used, and for seventeen months thereafter returned it for taxation at fifteen cents per pound. *Held*, that his conduct was evidence proper to be considered by the jury, in connection with other circumstances, in determining whether or not he intended to defraud the United States of the tax to accrue upon the manufactured and the unmanufactured tobacco found in his factory at the time of seizure.
3. A. used portions of a building as a tobacco manufactory, and the remainder of it as a salesroom, having a counter at which goods were sold at retail. Cigars and tobacco removed from the factory to the salesroom, for sale at retail, were returned by him for taxation as "sold or removed for sale," though he still owned them. *Held*, 1. That this was not such a sale or removal as to entitle the tobacco to be so returned. 2. That A.'s manner of doing business was proper to be considered by the jury in determining whether or not he thereby intended to defraud the United States in respect to other tobacco in his manufactory at the time of seizure.
4. Certain tobacco, liable to a tax of twenty-five cents per pound, was, by the act of March 3, 1865 (*supra*), subjected, after the last day of that month, to a tax of thirty-five cents per pound. On March 8, 1865, A. made a fictitious sale of a large quantity of such tobacco, in order that he might return it as sold prior to April 1, 1865, and did so return it, paying but twenty-five cents per pound as the tax thereon. *Held*, 1. That he was not authorized thus to return it. 2. That the United States had the right to show the fictitious character of the transaction as tending to prove an intent to defraud, even though some of the tobacco was, when actually sold and removed, liable to pay a tax of but ten cents per pound.
5. Evidence having been given of the foregoing acts and of other violations of the internal-revenue laws by A., consisting of acts and omissions in connection with the sale and removal of tobacco subject to tax, but unconnected with the property under seizure, the court instructed the jury, in substance, that if they found that A. had in fact so violated the internal-revenue

laws, the burden of proof was upon him to satisfy them that such violations were not committed by him with intent to defraud the revenue; and that unless he did so, they might draw the inference that such intent existed; and from such inference further conclude that the property seized was also held by him with like intent, as charged in the information. *Held*, that the instruction was not erroneous.

ERROR to the Circuit Court of the United States for the Southern District of New York.

This was an information filed by the United States, March 27, 1868, in the District Court for the Southern District of New York, for the condemnation and forfeiture of a quantity of manufactured tobacco, raw materials, and other personal property seized by the collector of internal revenue for the fourth collection district, March 25, 1868, at the tobacco manufactory of Christian H. Lilienthal, in the city of New York, for a violation of sect. 48 of the act of Congress approved June 30, 1864, entitled "An Act to provide internal revenue to support the government to pay interest on the public debt, and for other purposes," as amended by the act of July 13, 1866.

Lilienthal appeared, and claimed the property.

The questions which the case involves are presented in the following charge of the court to the jury: —

The issue in this case is a very plain one. The prosecution is founded on the forty-eighth section of the act of June 30, 1864, as amended by the ninth section of the act of July 13, 1866 (14 Stat. 111); a section enacted at a comparatively early day in the history of the internal-revenue acts of this country, and which has remained on the statute-book, with some modifications, ever since, and has been enforced in a great many cases. Its provisions are these: that where any property subject to a tax under a law of the United States is found in the possession of any person, with intent to sell it, or remove it, or dispose of it, without paying the tax upon it, or without having the tax paid upon it, or with intent to defraud the internal-revenue laws of the United States, such property so found under such circumstances in the possession of any person, with such intent, shall be forfeited to the United States, and may be seized, as this property was in this case, and be proceeded against in the manner in which this property is being proceeded against in

this suit. The same section provides that if any raw materials are found in the possession of any person, he having the intent in respect to them, when they are so found in his possession, of manufacturing them into articles subject to tax, in respect to which articles he intends that the tax shall not be paid, or that the revenue shall be defrauded, such raw materials shall be forfeited to the United States. The same section goes on to provide that, under such circumstances, not only shall the articles subject to tax and the raw materials be forfeited, but all personal property, of any kind whatsoever, found on the same premises where such offending articles, so to speak, are found, shall be forfeited. There has been seized, in this case, not only tobacco in a manufactured state, subject to tax, but also a large quantity of raw materials, — raw tobacco and other raw materials, — and a large quantity of personal property connected with this establishment. The report of the appraiser values the entire property at $104,000. In that amount it was bonded and delivered to the claimant, and the government accepted what it regarded as a satisfactory bond, in place of the property. It is this $104,000 worth of property, consisting generally of tobacco subject to tax, raw materials, and other personal property found in this establishment, that is the subject of this suit.

It is for the government to satisfy you that this property was in this establishment with the intent mentioned, in respect to it, on the part of those in whose custody and control it was. For the purpose of making the matter clearly definite, I will read the language of the statute: —

"All goods, wares, merchandise, articles, or objects on which taxes are imposed by the provisions of law, which shall be found in the possession or custody or within the control of any person or persons, for the purpose of being sold or removed by such person or persons in fraud of the internal-revenue law, or with design to avoid payment of said taxes, may be seized by the collector or deputy collector of the proper district, or by such other collector or deputy collector as may be specially authorized by the commissioner of internal revenue for that purpose, and the same shall be forfeited to the United States; and also all raw materials found in the possession of any person or persons intending to manufacture the same

into articles of a kind subject to tax, for the purpose of fraudulently selling such manufactured articles, or with design to avoid the payment of said tax; and also all tools, implements, instruments, and personal property whatsoever in the place or building, or within any yard or enclosure, where such articles or such raw materials shall be found, may also be seized by any collector or deputy collector, and the same shall be forfeited as aforesaid."

The district attorney has stated to you, in his summing up, the various grounds upon which he claims the forfeiture of the property seized; that is, the various grounds upon which he maintains that he has proved the existence of this intent, in respect to the taxable tobacco and the raw materials and other property seized in the factory of Lilienthal. As you have seen, the testimony is entirely testimony in regard to what are alleged to have been previous acts of omission and of commission on the part of Lilienthal and persons in his establishment, in respect to the conduct of their business at previous times in relation to the internal-revenue laws of the United States. This is a class of evidence which, as has been expressly adjudicated in many cases by the Supreme Court of the United States, is perfectly competent and legitimate evidence from which to infer a fraudulent intent in respect to existing property. It has been held, in respect to the importation of goods at the custom-house, that a fraudulent intent in respect to a particular importation of goods may be legitimately inferred by a jury from a previous fraudulent intent and previous fraudulent acts, shown in respect to property previously imported through the custom-house. There is a large class of cases on that subject, and the doctrine has been recently applied to an action under the internal-revenue laws by the circuit judge of this circuit, in a case in the northern district of New York in regard to distilled spirits. It is, therefore, a class of evidence that can be legitimately appealed to, and is appealed to, in all cases of this kind. Sometimes it is accompanied by other evidence, in respect to an existing intent, in regard to property seized. Sometimes property seized is found concealed; and to support the idea that fraud was intended in regard to it, previous fraudulent acts are given in evidence. Sometimes, as in this case, the evidence consists almost entirely of testimony in regard to previous acts,

and to what is claimed by the district attorney to have been the fraudulent intent existing in such previous acts.

I shall call your attention particularly to the various matters that are relied on by the district attorney. The first one is in regard to what is called "extra long smoking-tobacco," a species of tobacco in regard to which it may be generally stated that it has in it a very large proportion of stems. It is a kind of tobacco which, according to the evidence, was manufactured in this establishment, as a part of its ordinary business, prior to the 1st of August, 1866, at which date commenced this series of returns, seventeen in number, which are the main subjects of consideration in this case. It is a species of tobacco that was manufactured previous to that time, and returned month by month in the monthly returns. That date is taken in this case because it is the date when the act of July 13, 1866, changing the rate of duty on various descriptions of tobacco, went into operation. Previous to that time the act imposing a tax on tobacco was the act of March 3, 1865, 13 Stat. 469. That act of March 3, 1865, divided smoking-tobacco into two classes for taxation. One class, made exclusively of stems, was taxed fifteen cents a pound; and smoking-tobacco of all kinds, not included and provided for under the fifteen cents clause, was taxed thirty-five cents a pound. It appears from the evidence that the "extra long smoking-tobacco," so made in this establishment prior to Aug. 1, 1866, and so being made in it when the act of July 13, 1866, was passed, had been, up to the 1st of August, 1866, returned by Lilienthal as "smoking-tobacco," under this thirty-five cents clause, and not under the fifteen cents clause. Not being made exclusively of stems, it was not liable to the fifteen cents tax, and therefore it was liable to the thirty-five cents tax. It also appears that, for some twenty days or so after the 1st of August, 1866, when this new law, July, 1866, went into effect, this "extra long smoking-tobacco," which had before Aug. 1, 1866, been returned at thirty-five cents, was returned by Lilienthal as liable to a tax of forty cents, under a clause in the act which so went into effect Aug. 1, 1866, and was returned by him under the head of "chewing-tobacco." The reason stated by the claimant for returning such tobacco as "chewing-tobacco" is, that there

was no place to insert it in the form of return, except under the head of "chewing-tobacco." It had, however, been previously returned as "smoking-tobacco," and it was called "smoking-tobacco" in the price-list issued by the claimant. After it had been returned for some twenty days after the 1st of August, 1866, as liable to a tax of forty cents a pound, it was at all times thereafter returned by the claimant as liable to a tax of fifteen cents a pound; it was continued at that rate throughout all the returns, down to the 31st of December, 1867, and all the smoking-tobacco of every kind that was returned by the claimant in all the returns made by him during all the seventeen months was returned at fifteen cents a pound, and no smoking-tobacco was returned at forty cents a pound. There was no class of thirty-five cents smoking-tobacco in the act of July, 1866. The only classes of smoking-tobacco in that act were these two, — smoking-tobacco sweetened, stemmed, or butted, forty cents per pound; and all smoking-tobacco not sweetened, nor stemmed, nor butted, including that made of stems or in part of stems, and imitations thereof, fifteen cents per pound. A great deal was said in this case on the argument to the court as to the proper construction of the act of July, 1866, in regard to the tax on this "extra long smoking-tobacco." You will recollect that, during the greater part of the seventeen months after the 1st of August, 1866, all except a very small portion of the time, at the commencement, this "extra long smoking-tobacco" was prepared by putting into it rather more stems, say ten pounds more in every ninety pounds of product, than they had been in the habit of putting in before the 1st of August, 1866. It always had had a large proportion — not a preponderance — of stems in it, although it was not made exclusively of stems. I do not consider it necessary in this case to determine what is the proper interpretation of this fifteen cents clause in the act of July, 1866, or under what head in that act, as a matter of law, this "extra long smoking-tobacco," manufactured in the manner described by Dennerker, properly falls. The facts, to recapitulate them, about which there is no dispute, in regard to this "extra long smoking-tobacco" are, that at the time this act of July 13, 1866, went into effect, Lilienthal was manufacturing this "extra long

smoking-tobacco;" that, previous to that time, he had returned it at thirty-five cents a pound, as "smoking-tobacco," under the act of March 3, 1865; that after the act of July, 1866, went into effect, and until about the 20th or 21st of August, 1866, he returned it at forty cents a pound; and that after that time the mass, if not all of it, during the entire residue of the seventeen months, was returned at fifteen cents a pound,—there being no difference whatever in the tobacco during all the periods when it was so returned at the several rates of thirty-five, forty, and fifteen cents, except that during almost all of the seventeen months, commencing with August, 1866, it contained in every ninety or one hundred pounds ten pounds more of stems than it had before August, 1866, been in the habit of containing. The quantity of it in the returns for such seventeen months was quite large. The district attorney claims that the average was about five thousand pounds a month; and, at all events, the quantity was considerable.

The district attorney has addressed to you an argument for the purpose of showing that, no matter what the interpretation of the act of July, 1866, may properly be, the conduct of Lilienthal in regard to this "extra long smoking-tobacco" shows an intent on his part throughout to defraud the government in regard to the tax upon such tobacco. It is for you to say whether you believe that he has established the proposition for which he contends. The theory on the part of the defence is, that because this tobacco had some stems in it, it was liable to a tax of fifteen cents a pound; that, at all events, Lilienthal, reading the law for himself, had a right to think that it was capable of a double interpretation, and that there could be no fraudulent design or intent on his part until his attention was in some way called to the subject, or until the matter had been judicially determined. The district attorney on his part contends that if to put any stems whatever into the tobacco reduces it to a fifteen-cent tax, it makes no difference how much stems there are in it, more or less; and that therefore the testimony in regard to putting more stems into this tobacco has no bearing upon any honest transactions in regard to this matter. In other words, he claims that if the ground taken by Lilienthal at the time, that this tobacco was liable to the fifteen

cents tax because it had some stems in it, was correct, and that all tobacco, under the act of July, 1866, which had any stems in it, or was made in part of stems, was liable to fifteen cents a pound tax and not forty cents, then it was absurd to put in any more stems, because the quantity of stems that was in already was entirely sufficient to bring the tobacco within the fifteen cents tax. It is for you to say what force and weight you will give to this argument. In that connection the district attorney calls attention to the fact that, all through the seventeen months, all the smoking-tobacco that was returned by Lilienthal was returned at the fifteen cents rate, and none was returned at forty cents a pound. He also claims that the books of Lilienthal show that Lilienthal had a purpose to benefit himself, and not to deal honestly with the government, in this: that what was returned by him at forty cents a pound, during the short time he returned it at that rate, after the act of July, 1866, went into operation, appears by the books to have been sold at seventy cents a pound; and when he returned the tobacco at fifteen cents a pound, thus reducing the tax by twenty-five cents a pound, he reduced his price to the purchaser by only ten cents a pound for the same tobacco, with the same increased quantity of stems in it, — thus making to himself a clear difference in his own favor, as is claimed, of fifteen cents a pound out of the twenty-five cents a pound reduction in the tax. That is claimed by the district attorney to be a circumstance to be taken into consideration. It is also claimed by the district attorney that there is no evidence to show that the government had any information until February, 1867, as to how this "extra long smoking-tobacco" was made; that at that time, when such information was communicated to Van Wyck, the collector, as is shown by his letter of March, 1867, to the Internal-Revenue Office, he supposed the state of facts to exist which is disclosed in that letter, namely, that the identical stems which were taken out of the tobacco for the purpose of being subjected to this treatment, which would assimilate them to leaf-tobacco in appearance, and perhaps in flavor, were put back with the leaves from which they were taken; that the internal-revenue office, when, in August, 1867, it replied to the letter of Van Wyck, acted upon that idea, and in this way:

that while the act of July 13, 1866, said that smoking-tobacco stemmed should pay a tax of forty cents a pound, the commissioner of internal revenue stretched a point in favor of the tobacco manufacturers by saying to them: "Although you take away physically the stems from the leaves in the course of your manufacture, so that in one sense the tobacco is stemmed, nevertheless, for the purpose of giving you the privilege of putting those stems through this manipulation, we will consider that the tobacco is not stemmed, provided you put back those identical stems with the leaves to which they belong." The district attorney also contends that, inasmuch as the claimant returned this tobacco, under the act of 1865, at the rate of thirty-five cents, and then returned it for a little while, under the act of 1866, at forty cents, and then changed the rate to fifteen cents, he has not shown honesty and good faith, because it does not appear that he laid all the facts before the Internal-Revenue Department, and asked what the tax on the tobacco should be, but put it down, month after month, at fifteen cents a pound, without raising the question whether the rate ought not, perhaps, to be forty cents. These I understand to be substantially the views urged on the part of the government in regard to that question. You will perceive that those views are, as I said before, entirely irrespective of any determination, as a matter of law, as to what in fact the tax on that tobacco was; and it is for you to say what inference you will draw from all this testimony in regard to the intent Lilienthal had in respect to this "extra long smoking-tobacco." The question applies to the entire series of months from August, 1866, to December, 1867. The seizure took place in March, 1868; and it appears from the inventory of the property seized that there was among it a considerable quantity of "extra long smoking-tobacco," some of it loose and some of it in papers. These are all the remarks which it seems necessary to make to you in regard to this "extra long smoking-tobacco."

The next subject is the Orinoco tobacco, which was sent to California in April and May, 1867,—on the 13th of April, thirty-six hundred pounds, and on the 29th of May, thirty-four hundred pounds. It is admitted that this tobacco was not returned for tax at that time,—April and May, 1867. There

is no dispute that it was sent out of the establishment at that time; that it was removed for sale at that time; that it was sent to California to be sold at that time; and that it was not put into any return at that time. If it had been put into a return at that time, there is no dispute that it would have come under the fifteen cents tax under the act of 1866, because it was tobacco which had not been in any manner stemmed. It was leaf and stem together, just as it grew, pressed into a mass, into a cake. Not having been stemmed, it was not subject to a duty of forty cents a pound, and it fell directly under the fifteen cents clause, as smoking-tobacco not stemmed. The history of that tobacco, as developed, is this: It was returned for tax as a portion of a larger mass of the same description of tobacco, Orinoco tobacco, on the 31st of March, 1865, the day before the 1st of April, 1865, and the day before the act of March 3, 1865, went into effect. That act of March 3, 1865, imposed a higher tax upon that description of tobacco than it had been previously subject to under the act of June 30, 1864. Under the act of June 30, 1864, that tobacco was liable for a tax of twenty-five cents a pound. The provision of that act was: "Smoking-tobacco, manufactured with all the stem in, the leaf not having been butted or stripped from the stem, twenty-five cents per pound." Under the act of March 3, 1865, which was to go into effect on the 1st of April, 1865, this tobacco, which, up to the close of the 31st March, 1865, was liable to a tax of twenty-five cents a pound, would have been liable to a tax of thirty-five cents a pound, being an increase of ten cents a pound. Lilienthal at that time went through the process that was developed on the trial, and stated by himself in his testimony, of entering upon his sales-book a sale, or a transaction as a sale, of the mass of Orinoco tobacco, of which this seven thousand pounds, which were afterwards sent to California in April and May, 1867, formed a part, and of a large quantity of other tobacco, in all some $60,000 worth, to a house in this city, Kearney & Waterman. Kearney & Waterman gave him their check for that amount, and, two or three days afterwards, he gave to Kearney & Waterman his check for the same amount. The tobacco was not removed from his establishment, and never passed into the possession of Kearney & Waterman. Lilienthal

kept it on his own premises, and, after he brought it back (as the expression is) he treated it as his own, and disposed of it as such. In connection with such alleged sale in that way to Kearney & Waterman, on the 31st of March, 1865, Lilienthal put that Orinoco tobacco into the tax, at that date, at the rate of twenty-five cents a pound, and returned it as sold. He told you frankly on the stand that he went through this operation because, under the law of 1865, there was going to be a higher duty on such tobacco. He kept the tobacco on hand so long that there came another change in the law, and by the time he sent it to California, if he had not paid any tax on it before, he would have had to pay on it a tax of only fifteen cents a pound. It is my duty to say to you that that transaction was utterly illegal. The ninety-fourth section of the act of June 30, 1864, under which Lilienthal was acting at the time he returned this tobacco for tax on the 31st of March, 1865, before the act of March 3, 1865, went into effect, provided as follows: "Upon the articles, goods, wares, and merchandise hereinafter mentioned, except where otherwise provided," which includes this tobacco taxable at twenty-five cents a pound, "which shall be produced and sold, or be manufactured or made and sold, or be consumed or used by the manufacturer or producer thereof, or removed for consumption or for delivery to others than agents of the manufacturer or producer, within the United States or territories thereof, there shall be levied, collected, and paid the following duties, to be paid by the producer or manufacturer thereof." It is perfectly clear that that transaction was no real sale of the property. It was not intended to be a sale. It was, as it has been well characterized here, a perfect sham, from beginning to end. Now, it was illegal to return the Orinoco tobacco for tax, because it was not sold, nor was it removed for consumption. The words "removed for consumption," in the act of 1864, are defined by the provisions of the ninety-first section of the same act. The property must be removed from the premises of the manufacturer in good faith, with a then present intention to have it consumed, as against the will of the manufacturer and owner of it, giving a right to another person to put it into consumption, or the property in it must in some way be changed, or it must be sent for sale on commission, or,

in some way or other, an intention to put it into the category prescribed by the act must be manifested in regard to it. But this property, you will remember, remained on the premises of Lilienthal, not disturbed in any manner, and was returned for tax under the circumstances stated.

It is claimed on the part of the defence, that, inasmuch as the tax of twenty-five cents a pound had once been paid upon this Orinoco tobacco, there was no obligation on the part of Lilienthal to make a subsequent return of it, and to pay another tax on it; and that this was the case, *a fortiori*, if, as was the fact at the time the tobacco was sent to California, the tax on it would have been fifteen cents a pound. In this connection reference was made to the following provision in the seventh section of the act of July 13, 1866, which went into effect on the 1st of August, 1866, and was in force when this Orinoco tobacco was sent to California, in April and May, 1867: "All manufactures and productions on which a duty was imposed by either of the acts repealed by this act," which embraces the provisions imposing duties on tobacco contained in the previous act of June, 1864, which was the act in force when this tobacco was returned for tax on the 31st of March, 1865, "which shall be in the possession of the manufacturer or producer, or of his agent or agents, on the day this act takes effect, the duty imposed by any such former act not having been paid, shall be held and deemed to have been manufactured or produced after such date." The defence contends that the duty on this tobacco had been paid, within this provision. But that is not the law. The law says, all manufactures "on which a duty was imposed," "the duty imposed" by the act of 1864 not having been paid. Now, no duty was imposed upon this Orinoco tobacco. A duty was imposed upon it only when it was sold in good faith or removed for consumption. There was no duty imposed upon it at the time it was returned for tax at twenty-five cents a pound. The claimant had no right to return it at twenty-five cents, particularly when it is acknowledged by himself, on the stand, that he did so for the purpose of getting rid of the coming thirty-five cents duty, and when, therefore, it is clear that there was an intent to commit a fraud on the government. The act of 1866 only applies to the payment of a duty which has been imposed.

Otherwise a party would be able to take advantage of his own wrong, by paying a tax of twenty-five cents a pound for the purpose of getting rid of a tax of thirty-five cents that was going into effect the next day, and paying the tax when the law gave him no right to pay it, and afterwards to say that, because he had paid it, there was no intent to defraud the government, and that thus the fraud so committed was condoned. The law is not so. The law merely says that if a tax which has been imposed has been paid, no tax can be collected again on the same article. You are to consider the question not solely in the light of the fact that the law happened to be altered again, and the duty to be reduced from thirty-five cents to fifteen cents a pound, before the tobacco was sent to California, but also in the light of what Lilienthal did, and what his intent was, in regard to the tobacco, as bearing upon his intent in regard to the tobacco found in his possession when his establishment was seized.

The district attorney has called your attention, very properly, to the fact that the law, in all its provisions, aims at this: that manufacturers of tobacco shall not be allowed to aggregate in their establishments large quantities of tax-paid goods. An account is to be kept of goods sold, as they are sold and removed. They are to be removed from the premises, — removed for consumption. They are not to be returned in masses, at the pleasure of the manufacturer, at a given time, without being disturbed in any manner or removed from his establishment, so that he may be enabled to have on hand a large mass of goods, from which he can say, at any time, that any particular goods sold which cannot be traced were taken. These considerations, addressed to you, are considerations of force, and are to be taken into view by you in judging of the intent with which a manufacturer aggregates upon his premises, without removing therefrom, a large quantity of tax-paid goods, such a practice being against all the provisions of the law, and directly unlawful in respect to this Orinoco tobacco, so returned for tax on the 31st of March, 1865.

The next subject in regard to which the district attorney claims that a fraudulent intent is shown on the part of Lilienthal is in respect to the account which, by the ninetieth section of the act of 1864, as amended by the ninth section of the act

of 1866, is required to be kept by every tobacco manufacturer. We have had exhibited here all the books on the subject kept in this establishment. They appear not to be blank forms printed, but to be entirely in writing. This one is headed, "Account of tobacco and snuff sold by C. H. Lilienthal in the year 1867." The heading is all in writing. This one that preceded it appears to have a heading in print. But in regard to both of them, it may be said that they embrace nothing but goods sold. They in no manner embrace, or pretend to embrace, goods manufactured. The earlier book is headed, "Quantity of tobacco and snuff sold and consumed, and removed for sale or consumption, from the factory;" and the latter book is headed, "Account of tobacco and snuff sold." In regard to this matter the law is explicit. It requires every manufacturer of tobacco, snuff, or cigars to "keep in book form an accurate account of all the articles aforesaid thereafter purchased by him, the quantity of tobacco, snuff, snuff-flour, or cigars, of whatever description, manufactured, sold, consumed, or removed for consumption or sale, or removed from the place of manufacture." It is perfectly clear that, in this case, no such book was kept by Lilienthal, and no book showing in any manner the manufactured goods, but showing only those that were sold. "Manufactured" goods means goods the manufacture of which is completed, so that the goods are in a condition to be sold, and so that all that needs to be done, if a purchaser asks for them, is to deliver them. No account of such goods was kept. When the manufacturer comes to make up his abstract, and hand it in to the assessor, he is not required to hand in an abstract of goods manufactured. He is required to hand in only an abstract of goods purchased, sold, or removed. But Lilienthal, as you perceive, had, in the abstracts returned by him, a column for goods manufactured, as well as one for goods sold and removed for sale. He had no book, however, from which he could obtain any entries to put into the column of goods manufactured, because no such book was kept; and therefore that happened which you naturally expect would happen. He filled up the column of goods sold, in the abstract furnished to the government, from the book kept by him, of goods sold; and when he came to fill up the column of goods manufactured, having no

record of them, he put down in every case, as manufactured, the same quantity which he put down as sold.

It was a clear violation of law not to keep an account of goods manufactured. The reason why the law requires this book of goods manufactured to be kept, although it does not require the abstract returned by the tenth day of each month to set forth the goods manufactured, is, that the manufacturer is required to furnish a statement or inventory every January, setting forth all the property he has on hand in his business, and what portion of the goods was manufactured or produced by him, and what portion was purchased from others. Therefore, unless a record be kept of goods manufactured, it is impossible for the manufacturer to comply with the law, by handing in every January a true statement of all the goods on hand, specifying which of them were manufactured or produced by him, and which of them were purchased.

The district attorney has also called your attention to the inventories furnished by Lilienthal for 1867 and 1868, and to what he claims are discrepancies between them and the monthly returns made to the government. It is for you to say what inference you will draw therefrom with regard to any intent on the part of Lilienthal. The twelve returns for 1867, in respect to chewing-tobacco, correspond throughout, in the columns for manufacture and sale, so many pounds being manufactured, and the same number of pounds being sold, in the same month. As a matter of course, the quantity of manufactured chewing-tobacco set forth as on hand in the inventory of 1868 ought not to have been greater or less than the quantity of manufactured chewing-tobacco set forth as on hand in the inventory of 1867; and yet the district attorney states that the two inventories differ in that respect. So, in regard to fine-cut shorts, the two columns for manufacture and sale are alike in the twelve returns for the year 1867, and yet the two inventories do not correspond in respect to fine-cut shorts. So in regard to smoking-tobacco, the district attorney claims there is a like discrepancy. He also claims that the Orinoco tobacco, if it were sold and brought back, ought to have been returned as purchased goods on hand on the 1st of January, 1867, whereas he claims it was not so returned. All these circumstances are commented

upon by the district attorney, for the purpose of inferring from them an intent on the part of Lilienthal throughout, in the manner in which he kept his books, and in the manner in which he returned for tax, under the act of 1865, the tobacco which he had on hand when that act went into effect, and in the fact that he kept on hand a large quantity of tax-paid tobacco, contrary to the policy of the law, not to deal honestly with the government, but to violate the law, and thence of inferring a fraudulent intent in regard to the goods on hand in his establishment when it was seized.

The last subject to which attention was called by the district attorney was the result of the examination of the books of the claimant. It appears from them, in respect particularly to that which occupied so much time in the investigation, — the Orinoco tobacco and the killickinick tobacco, — that there are large quantities of granulated tobacco found in the order-books that are not found, in the same specific items, in the tax-books, and large quantities of granulated tobacco returned for tax in the tax-books which cannot be identified with any specific items in the order-books. A great many items were identified, and, in regard to those which could not be, you will recollect the testimony of Dennerker. When asked, "Where did the granulated tobacco come from which filled the orders in the order-books, which cannot be identified as items in the tax-books?" it was part, he said, of a large mass that had been entered for tax on a certain day, and taken downstairs into the retail-counter department. Under the law, that was a wholly illegal mode of doing business. Lilienthal had no right arbitrarily to take a quantity of killickinick tobacco and return it for tax, and remove it downstairs into his retail-counter department, or into any other part of his premises, and peddle it out by the pound from day to day for an indefinite period of time. When it was so entered for tax, as I stated before in regard to the Orinoco tobacco, it had not been sold, and it was not removed for consumption, within the law. Removing it from upstairs to downstairs was not a removal for consumption, within the meaning of the statute. In addition to that, it is admitted that, when tobacco so taken in masses, and returned for tax, and then taken downstairs to the retail counter, was

sold at the retail counter afterwards, no record of those sales was kept, in any manner whatever. The ninetieth section of the act of 1864, as amended by the act of 1866, requires that a record shall be kept of all sales, and that an abstract of such sales shall be returned by the tenth day of each month. This property, when it was taken from upstairs to the retail-counter room, was not sold by Lilienthal to anybody. It was not sold to himself. It was not removed from his premises for consumption. It was taken from upstairs and brought downstairs, and, when it was sold over the counter, no record of it was kept, in utter violation of the statute, and no abstract of it was returned, in violation of the statute. Lilienthal arbitrarily took three hundred or four hundred pounds and returned it for tax to-day, and then carried it downstairs, and then kept no record whatever of its subsequent sale. So that the purpose of the law was defeated by this transaction, because the government could have no means, when it got hold of Lilienthal's books, of tracing the sales of the tobacco. The fact that the government has been foiled in tracing such sales has been demonstrated here, because, no record of the sales having been kept, whenever any order which was found in the order-book could not be identified with an item in the tax-book, specifically returned as so many pounds, Dennerker testified that the order was filled out of the masses of tobacco which so went downstairs to the retail counter. The business, therefore, was conducted in such a manner as to deprive the government of what the law designed to provide, namely, a check over the transactions of tobacco manufacturers.

I have thus gone over the books of the claimant. It was necessary that I should show you what are violations of the law, in order that, if you should come to the conclusion, from the evidence, that such violations of law, in point of fact, took place, and that they showed an intent on the part of Lilienthal to defraud the revenue, you might have before you the law and the facts from which the district attorney claims that you have a right to infer a fraudulent intent on the part of Lilienthal, in respect to the tobacco on hand at the time of the seizure. I do not design to intimate any opinion whatever in regard to any intent on the part of Lilienthal in respect to

these matters. But the facts in this case are undisputed. There is no serious contest about a single fact, except in regard to the very point of the law, — the intent. On the part of the claimant, it is claimed that the investigation before you has shown that, in point of fact, the government has not proved that it has been deprived of any tax; and also that it has been shown affirmatively, by an examination of the books, that the government has received all the taxes to which it was entitled, upon all goods which passed out of the establishment of Lilienthal prior to the seizure. You have heard all the evidence and the summing up on that subject, and it will be for you to say what is your belief on that subject, as bearing on the question of Lilienthal's intent in respect to the goods seized.

The instructions of law prayed by the claimant are twelve in number, to all of which I assent. The thirteenth and fourteenth instructions, which are requests to charge as to the facts, I decline to charge, as not being questions of law.

The propositions on the part of the government are substantially what I have already stated, but I will go over them, for the purpose of saying that I assent to them.

"First. If the jury find that the books, Exhibits Nos. 138 and 138A, were kept by Lilienthal or his agents, as and for the account in book-form required to be kept by the provisions of the ninetieth section of the act of June 30, 1864, as amended by the ninth section of the act of July 13, 1866, and that the said Lilienthal and his agents have therein kept no account of the quantity of tobacco or snuff manufactured by said Lilienthal at his factory in Washington Street, from Aug. 1, 1866, to Jan. 1, 1868; that quantities of tobacco and snuff were removed for sale and removed from the said place of manufacture during said period, and that no account of the tobacco and snuff so removed was kept as of removals thereof, and no accurate account of the tobacco and snuff so removed was kept in any manner in said books" (that refers to the sales over the retail counter, of which no record was kept, as sales); "that large quantities of granulated tobacco and other descriptions of tobacco manufactured were sold by Lilienthal during said period, and that no account of such sales, as sales, was kept in those books; that quantities of purchased manu-

factured tobacco were sold and removed from the said premises during the period from Aug. 1, 1866, to Dec. 1, 1867, and that no accurate account of such sales or removals was kept in said books; that Exhibits numbered 1 to 17, both inclusive, were furnished to the assistant-assessor of the district by the said Lilienthal or his agents as true and accurate abstracts of all such sales and removals, and were not true and accurate abstracts thereof" (that means, not that they were not true and accurate abstracts of the books which Lilienthal kept, not that Dennerker did not transfer them accurately from his tax-book into the return, but that they were not, as recorded by Davis, true and accurate abstracts of the actual transactions); "that the annual inventories, Exhibits 18 and 19, were made out and delivered by said Lilienthal to the assistant-assessor of the district, severally, as true statements and inventories of the matters and things therein contained, as required by the said ninetieth section, as amended as aforesaid; that it appears from said inventory and abstracts that much more chewing-tobacco and fine shorts was manufactured in said manufactory during the year 1867 than was declared upon said abstracts to have been manufactured; that a large quantity of smoking-tobacco manufactured on said premises has been sold or removed during the year 1867, which had not been returned for taxation upon the said abstracts, and of which no account was contained therein or in said books, Exhibits Nos. 138 and 138A, — then the burden of proof is upon the claimant to satisfy the jury that the tobacco so manufactured on said premises, and sold or removed without due account, return, and entry made thereof in the said books and abstracts, in the manner required by law, was not so sold and removed in fraud of the internal-revenue laws, and with the intent to evade the taxes thereon; and if the claimant shall not have so satisfied the jury of his intent respecting the same, the jury may infer that the claimant's intent in respect to the same was fraudulent, and that his possession of the goods in suit was with the like intent."

I also charge the second proposition: "If the jury find that prior to Aug. 1, 1866, when the act of July 13, 1866, went into effect, changing in some respects the rates of taxation on manu-

factured smoking-tobacco, a brand of smoking-tobacco known as 'extra long smoking-tobacco' had been manufactured by Lilienthal, by cutting together stripped or stemmed leaf and stems in certain proportions, and had been sold and returned for taxation by him as 'smoking-tobacco,' subject to a tax of thirty-five cents per pound under the existing law; that from the time said act of July 13, 1866, went into effect, the said 'extra long smoking-tobacco,' manufactured as aforesaid, was entered by said Lilienthal in the account required to be kept in book-form by the ninetieth section of the act of June 30, 1864, as amended by the ninth section of the act of July 13, 1866, of sales and removals of manufactured tobacco, as 'chewing-tobacco,' and was returned upon the abstracts of said accounts required to be furnished monthly to the assistant-assessor of the district, by said section, as 'chewing-tobacco,' subject to a tax of forty cents per pound, under the provisions of said act of July 13, 1866; that after the said first day of August, 1866, said Lilienthal varied the process of manufacturing said 'extra long smoking-tobacco' by merely increasing the proportion of stem; and from the twenty-first day of August, 1866, in each monthly return during the years 1866 and 1867, returned for taxation sales and removals of large quantities of the 'extra long smoking-tobacco,' so manufactured as 'smoking-tobacco,' subject to a tax of fifteen cents per pound under the provisions of said act of July 13, 1866; that the said 'extra long smoking-tobacco,' returned as 'chewing-tobacco' for taxation at the rate of forty cents per pound, was sold at seventy cents per pound, and the said 'extra-long smoking-tobacco' returned as 'smoking-tobacco' for taxation at the rate of fifteen cents per pound, was sold at the rate of sixty cents per pound; that no officer of internal revenue was advised by Lilienthal or his agents of the said practice of returning the said 'extra long smoking-tobacco' for taxation at fifteen cents per pound; that the commissioner of internal revenue had published his instructions and opinion that tobacco so manufactured was subject, under the said act of 1866, to the tax of forty cents per pound, as 'smoking-tobacco,' and never directly or indirectly countenanced or sanctioned the practice of Lilienthal in returning the said 'extra long smoking-tobacco;' and if the jury believe from

these facts that said Lilienthal and his agents made the said change in the process of manufacturing the said 'extra long smoking-tobacco,' and the said change in the manner of returning the same for taxation, during the said period from Aug. 1, 1866, to Jan. 1, 1868, for the purpose of selling and removing the same in fraud of internal-revenue laws, and with intent to evade the payment of taxes thereon, — then they would have a right to infer that the claimant and his agents had the like intent with respect to the property in suit."

I believe these are all the considerations which it is necessary to present to you in regard to this matter. You have listened patiently to the evidence, and to the summing up of the counsel, which has been exceedingly clear and thorough on both sides, and it is for you to say, on your oaths, what you believe to have been the intent of Lilienthal in respect to this property so seized. If the government has not made out, to your satisfaction, that such intent to commit a fraud upon the law or to evade the payment of taxes, in respect either to the goods on hand or to the goods to be manufactured out of the raw materials on hand, existed on the part of Lilienthal at the time the goods were seized, your verdict will be for the claimant.

The instructions prayed for by Lilienthal, and refused, as well as his exceptions to the charge as given, will appear in his assignment of errors in this court.

There was a verdict "for the United States, condemning the goods," and a judgment rendered, condemning them "as forfeited to the United States." The judgment was, on error, affirmed by the Circuit Court; and Lilienthal thereupon sued out this writ, and here assigns for error that the court below erred —

1. In refusing to grant the claimant's thirteenth prayer, "That there is no evidence in this action that, at the time of the finding or seizure of the property in this action, the claimant had not paid all the taxes due on all the goods, wares, merchandise, articles, or objects which had been before that date manufactured at his factory, and sold or removed therefrom."

2. In refusing to grant the claimant's fourteenth prayer, "That there is no evidence in this action that any goods,

wares, merchandise, articles, or objects on which taxes were imposed by the provisions of law, manufactured at the factory of Lilienthal, were ever sold or removed by him, or by any other person, in fraud of the internal-revenue laws, or with design to avoid payment of said taxes."

3. In refusing the claimant's following prayer: "If the jury find that, in the process of manufacturing the 'extra long smoking-tobacco,' a portion of the stem was removed from the leaf, and an amount of stem fully equal to or exceeding the quantity removed was subsequently, during said process, added to and intermingled with the leaf, so that, in point of fact, the manufactured product was composed of both stem and leaf, and so sold, that tobacco was, between August, 1866, and the date of seizure, liable to a tax of only fifteen cents per pound, and was properly returned at that rate."

4. In refusing the claimant's further prayer, "That the 'extra long smoking-tobacco,' if manufactured in the manner testified to by Dennerker, was smoking-tobacco made in part of stems, and was liable, under the act of July 13, 1866, to a tax of fifteen cents per pound during all the time subsequent to Aug. 1, 1866, and prior to the date of seizure of the property proceeded against in this action."

5. In refusing the claimant's further prayer, "That if the 'extra long smoking-tobacco' returned as liable to the fifteen cents rate was manufactured in the manner stated in the testimony of Dennerker, and contained a quantity of stem as great as, or greater than, that which grew with the leaf contained in said tobacco, then the said tobacco was liable, between Aug. 1, 1866, and the time of the seizure of the property herein proceeded against, to the fifteen cents tax, as returned."

6. In granting the first prayer asked on behalf of the government.

7. In granting the second prayer asked on behalf of the government.

8. In charging the jury that "Under the act of March 8, 1865, which was to go into effect on the 1st of April, 1865, this tobacco (that known as the Orinoco tobacco), which, up to the close of the 31st of March, 1865, was liable to a tax of twenty-

five cents a pound, would have been liable to a tax of thirty-five cents a pound."

9. In charging the jury as follows: "It is my duty to say to you that that transaction (the affair of the Orinoco tobacco) was utterly illegal."

10. In charging the jury that "It was illegal to return the Orinoco tobacco for tax, because it was not sold, nor was it removed for consumption."

11. In charging the jury that "It is claimed on the part of the defence, that, inasmuch as the tax of twenty-five cents a pound had once been paid upon this Orinoco tobacco, there was no obligation on the part of Lilienthal to make a subsequent return of it, and to pay another tax on it; and that this was the case, *a fortiori*, if, as was the fact at the time the tobacco was sent to California, the tax on it would have been fifteen cents a pound. In this connection reference was made to the following provision in the seventieth section of the act of July 13, 1866, which went into effect on the 1st of August, 1866, and was in force when this Orinoco tobacco was sent to California, in April and May, 1867: 'All manufactures and productions on which a duty was imposed by either of the acts repealed by this act,'—which embraces the provisions imposing duties on tobacco contained in the previous act of June, 1864, which was the act in force when this tobacco was returned for tax on the 31st of March, 1865,—'which shall be in the possession of the manufacturer or producer, or of his agent or agents, on the day this act takes effect, the duty imposed by any such former act not having been paid, shall be held and deemed to have been manufactured or produced after such date.' The defence contends that the duty on this tobacco had been paid, within this provision. But that is not the law. The law says, all manufactures 'on which a duty was imposed' 'the duty imposed' by the act of 1864 not having been paid. Now, no duty was imposed on this Orinoco tobacco. A duty was imposed upon it only when it was sold in good faith, or removed for consumption. There was no duty imposed upon it at the time it was returned for tax at twenty-five cents a pound. The claimant had no right to return it at twenty-five cents, particularly when it is acknowledged by himself on the stand that he

did so for the purpose of getting rid of the coming thirty five cents duty, and when, therefore, it is clear that there was an intent to commit a fraud on the government. The act of 1866 only applies to the payment of a duty which has been imposed. Otherwise, a party would be able to take advantage of his own wrong, by paying a tax of twenty-five cents a pound for the purpose of getting rid of a tax of thirty-five cents that was going into effect next day, and paying the tax when the law gave him no right to pay it, and afterwards to say that, because he had paid it, there was no intent to defraud the government, and that thus the fraud so committed was condoned. The law is not so. The law merely says, that if a tax which has been imposed has been paid, no tax can be collected again on the same article. You are to consider the question not solely in the light of the fact that the law happened to be altered again, and the duty to be reduced from thirty-five cents to fifteen cents a pound, before the tobacco was sent to California, but also in the light of what Lilienthal did, and what his intent was, in regard to the tobacco, as bearing upon his intent in regard to the tobacco found in his possession when his establishment was seized."

12. In charging the jury that "It was a clear violation of law not to keep an account of goods manufactured (as well as of goods sold)."

13. In charging the jury that, "Unless a record be kept of goods manufactured, it is impossible for the manufacturer to comply with the law by handing in, every January, a true statement of all the goods on hand, specifying which of them were manufactured or produced by him, and which of them were purchased."

14. In charging the jury that "There are large quantities of granulated tobacco found in the order-books that are not found in the specific items in the tax-books, and large quantities of granulated tobacco returned for tax in the tax-books which cannot be identified with any specific items in the order-books. A great many items were identified, and in regard to those which could not be, you will recollect the testimony of Dennerker. When asked, 'Where did the granulated tobacco come from which filled the orders in the order-books which cannot

be identified as items in the tax-books?' it was part, he said, of a large mass that had been entered for tax on a certain day, and taken downstairs into the retail-counter department. Under the law, that was a wholly illegal mode of doing business. Lilienthal had no right arbitrarily to take a quantity of killickinick tobacco and return it for tax, and remove it downstairs into his retail-counter department, or into any other part of his premises, and peddle it out by the pound from day to day for an indefinite period of time."

15. In entering judgment upon the verdict of the jury.

16. In entering any judgment whatever against the claimant or his property in the premises.

Mr. Richard T. Merrick, for Lilienthal.
Mr. Assistant-Attorney-General Smith, *contra*.

MR. JUSTICE CLIFFORD delivered the opinion of the court.

Articles or objects on which duties are imposed, found in the possession, custody, or control of any person for the purpose of being sold or removed by such person in fraud of the internal-revenue laws, or with design to avoid the payment of the duties imposed, may be seized by the proper officer, as therein provided, and the provision is that the same shall be forfeited to the United States. 13 Stat. 240.

Provision is also made by the same section for the seizure by the proper officer of all raw materials found in the possession of any such person intending to manufacture the same for the purpose of sale in fraud of said laws, or with the design to evade the payment of the said duties; and also for the seizure of all tools, implements, instruments, and personal property whatsoever in the place or building or within any yard or enclosure where such articles may be found, which were intended to be used by such person in such fraudulent manufacture; and the provision is that all such articles shall also be forfeited to the United States, by a proceeding *in rem* in the Circuit or District Court in the district where such seizures were made.

Due seizure was made in this case, and it appears that at that date smoking-tobacco of all kinds, if sweetened, stemmed, or butted, was by law subject to a tax of forty cents per pound,

and that such tobacco of all kinds, if not sweetened nor stemmed or butted, including that made of stems and imitations thereof, was subject to a tax of fifteen cents per pound. 14 id. 133.

Fourteen prayers for instruction were then presented by the claimant, all of which except the last two were given to the jury. Two prayers for instruction were presented by the prosecutor, both of which the court gave to the jury; and the claimant excepted to the rulings of the court in refusing the last two of his requests and in giving those presented by the prosecutor.

Subsequent to the charge of the court additional prayers for instructions were presented by the claimant, some of which were refused and were made the subject of exception by his counsel. Instructions were given by the presiding justice on his own motion, and six exceptions were taken to specific portions of the charge, as set forth in the record. Sixteen errors are assigned, embracing every exception except one taken at the trial. They have all been examined, and, where it is deemed necessary, they will be separately considered.

1. Numbers 13 and 14 of those presented before the charge was given to the jury may be considered together, as they involve similar considerations.

Argument to prove that those requests were properly refused is not necessary, as the record shows that much evidence had been introduced by the prosecutor tending to support the allegations of the information, that the claimant had not, at the date of the seizure, paid all the taxes legally due on the tobacco manufactured at his factory, and that large quantities of tobacco there manufactured had been sold or removed from the factory in fraud of the internal-revenue laws, and with the design to avoid the payment of the taxes. Testimony of the kind was plainly admissible, and, having been properly introduced, the question, whether it was sufficient to establish the charge, was beyond all doubt a matter for the jury, which is all that need be said upon the subject.

2. Three other errors assigned, to wit, the third, fourth, and fifth, may also be considered together, for the same reason.

Stemmed or butted tobacco was subject to a tax of forty

cents per pound, but if not stemmed or butted nor sweetened it was only subject to a tax of fifteen cents per pound. Butted tobacco in large quantities was manufactured by the claimant; but he contended that the manufacture was still subject only to the smaller tax, even though the leaf was stemmed or butted, if the manufacturer during the process added to and intermingled with the leaf an amount of stem equal to that previously withdrawn by the process of stemming or butting: but it is clear that that theory is wholly inadmissible in this case, for the reason that the evidence does not show that an equal amount of stems was added to the leaf during the process of manufacture; nor would it be a sufficient defence in any case, for two reasons: 1. Because the practice is not warranted by the act of Congress; 2. Because it would open the door to fraud, which could seldom or never be exposed; from which it follows that tobacco stemmed or butted, even if manufactured in the manner of that theory, was subject to the higher rate of tax during all the period specified in the fourth assignment of error; nor would it benefit the claimant in this case, even if it appeared in a given case that he put back during the process of manufacture a quantity of stems as great as that which grew in the leaf.

8. Separate exceptions were taken by the claimant to the ruling of the court in giving the two instructions requested by the prosecutor, and those two rulings are the subjects of the sixth and seventh alleged errors of the court.

Suffice it to remark in this connection that the books of the claimant were introduced, and that the theory of the prosecutor was that the claimant did not make the required entries in the same, and that he kept no account for the period specified of his manufacture; that large quantities of the same during the same period were sold or removed without making any entry of the same in the books kept as those required by law for the purpose, and that no accurate account of the manufactures so removed was kept in any manner in said books; that large quantities of granulated tobacco and other descriptions were during that period sold and removed from the manufactory, and that no account of such sales and removals was kept in said books; that seventeen monthly returns were furnished to

the assistant-assessor as true and accurate abstracts of all such sales and removals, and that they were not true nor accurate statements of the manufactured products sold and removed; that the two annual inventories given in evidence were made and delivered to the assistant-assessor as true statements of the matters and things therein contained as required by law; that it appears from the evidence, as compared with the first inventory and the abstracts, that much more chewing-tobacco and fine shorts were there manufactured during that year than is stated in said abstracts; and that a large quantity of smoking-tobacco manufactured at his factory had been sold or removed during the same year which had not been returned for taxation, of which no account was given in the said abstracts or in the said books.

Enough appears to show that the prosecutor gave evidence tending to prove all of those allegations; and the court instructed the jury, pursuant to the first request of the prosecutor, that if they found those several allegations to be true, then the burden of proof is upon the claimant to satisfy the jury that the tobacco so manufactured on said premises and sold or removed without due account, return, and entry made thereof in the said books and abstracts in the manner required by law, was not so sold and removed in fraud of the internal-revenue laws and without intent to evade the payment of the taxes thereon; and if the claimant shall not have so satisfied the jury of his intent respecting the same, the jury may infer that the claimant's intent in respect of the same was fraudulent, and that his possession of the goods in the suit was with the like intent.

Prayers for instruction are properly framed in that way where the evidence to support the charge is complicated, conflicting, or of a circumstantial character, as it belongs to the jury to decide whether the facts and circumstances introduced in evidence are satisfactorily proved, and it is the province of the court to determine whether, if fully proved, they will warrant the jury in finding that the allegations which constitute the charge are established. Pursuant to that view the second request for instruction to the jury was framed in the same way.

Preliminary to the legal proposition which the court was requested to adopt, the prayer presented contains a recital of the substance of the evidence given to support the charge, put hypothetically, for the consideration of the jury, appended to which is the formal part of the prayer to which the exception embodied in the seventh assignment of error is addressed. It is as follows: That if the jury believe from these facts that the claimant made the said change in the process of manufacturing the said long smoking-tobacco and the said change in the manner of returning the same for taxation, during the specified period, for the purpose of selling and removing the same in fraud of the internal-revenue laws and with intent to evade the payment of the taxes thereon, then they would have a right to infer that the claimant had the like intent with respect to the property in suit.

Both of these instructions were given at the request of the prosecutor, and the claimant insists with much confidence that the first is erroneous, inasmuch as it declares that in the event stated the burden of proof is cast upon the claimant to show that the acts proved were not done in fraud of the internal-revenue laws; but the court is of a different opinion, for several reasons. Regulations of the kind in revenue cases have often been prescribed by Congress. Provision was made in the first collection act that in actions, suits, or information to be brought where any seizure shall be made pursuant to that act, if the property be claimed by any person, in every such case the *onus probandi*, if probable cause is shown, shall be upon such claimant. 1 Stat. 678; Rev. Stat., sect. 900; *Locke* v. *United States*, 7 Cranch, 339.

Rules of similar import have been incorporated into the acts of Congress providing for the collection of internal revenue, as, for example, sect. 45 of the act of the 18th of July, 1866, provided that proceedings in seizures shall be according to existing provisions of law in relation to distraint and in conformity with the regulations of the commissioner, and that the burden of proof shall be upon the claimant of said spirits, to show that the requirements of law in regard to the same have been complied with. 14 Stat. 163.

Equally stringent provision in respect to distilled spirits is

contained in the subsequent act, which was in force at the date of the transactions involved in the prosecution. 15 id. 140. By that enactment it is provided that the burden of proof in the described cases shall be upon the claimant of said spirits, to show that no fraud has been committed and that all the requirements of the law in relation to the payment of the tax have been complied with, which is substantially the same as the provision in the prior act.

In criminal cases the true rule is that the burden of proof never shifts; that in all cases, before a conviction can be had, the jury must be satisfied from the evidence, beyond a reasonable doubt, of the affirmative of the issue presented in the accusation that the defendant is guilty in the manner and form as charged in the indictment. *Commonwealth* v. *McKie*, 1 Gray (Mass.), 64; *Same* v. *York*, 9 Metc. (Mass.) 125; *Same* v. *Webster*, 5 Cush. (Mass.) 305; *Same* v. *Eddy*, 7 Gray (Mass.), 584; Bennett & Heard, Lead. Cr. Cas. 299.

Text-writers of the highest authority state that there is a distinction between civil and criminal cases in respect to the degree or quantum of evidence necessary to justify the jury in finding their verdict. In civil cases their duty is to weigh the evidence carefully, and to find for the party in whose favor it preponderates; but in criminal trials the party accused is entitled to the legal presumption in favor of innocence, which, in doubtful cases, is always sufficient to turn the scale in his favor. 3 Greenl. Evid. (8th ed.), sect. 29; 1 Taylor, Evid. (6th ed.) 372.

Beyond question, the general rule is that the burden of proof in civil cases lies on the party who substantially asserts the affirmative of the issue, but the burden may shift during the progress of the trial. Possession of a negotiable instrument payable to bearer or indorsed in blank is *prima facie* evidence that the holder is the proper owner and lawful possessor of the same; but if the defendant prove that the instrument was fraudulent in its inception, or that it had been lost or stolen before he became the holder, the burden of proof is changed, and the *onus* is cast upon the plaintiff to prove that he gave value for it when he became the holder. *Collins* v. *Gilbert*, 94 U. S. 753.

Examples of like character almost without number might be given; but it is unnecessary, as every one knows that the plaintiff in every case may safely rest when he has introduced proof to make out a *prima facie* case. Authorities to show that the case before the court is a civil case are scarcely necessary, but if any be needed they are at hand. 1 Bishop, Cr. Law (6th ed.), sect. 835; *United States* v. *Three Tons of Coal*, 6 Biss. 371; *Schmidt* v. *Insurance Company*, 1 Gray (Mass.), 533; *Knowles* v. *Scribner*, 57 Me. 497.

Speaking of a proceeding *in rem* to forfeit spirituous liquors, the Supreme Court of New Hampshire say that it is only when some crime or misdemeanor is charged upon an individual that all reasonable doubt of the guilt of the accused must be removed; but here no one is accused of any crime, as it is not a proceeding against any person. Such being the character of the proceeding and of the character of the trial, the claimant may appear by attorney, may make and sign his claim by attorney, may file his plea in writing and sign it by attorney; issues may be joined, claims and pleas amended, verdict rendered on the issues, judgment rendered on the verdict, costs allowed the prevailing party, and execution for cost issued. *State* v. *Spirituous Liquors*, 47 N. H. 375; *Cooper* v. *Slade*, 6 H. of L. Cas. 772.

Innocence is presumed in a criminal case until the contrary is proved; or, in other words, reasonable doubt of guilt is in some cases of the kind ground of acquittal, where, if the probative force of the presumption of innocence were excluded, there might be a conviction; but the presumption of innocence as probative evidence is not applicable in civil cases nor in revenue seizures, as, for example, when a railroad company is sued in damages for negligence, the issue depends upon the evidence, without any presumption of innocence or guilt, but the company is not put to defence until a *prima facie* case of negligence is made out by the plaintiff; but when such a case is made out, courts do not instruct juries that if there is reasonable doubt as to negligence they must find for the defendant, as such an instruction would be a plain error. Issues of the kind, however, must be proved at least *prima facie;* and if the defendant fails to overcome the *prima facie* case,

the jury, if they deem it reasonable, may find for the plaintiff. 2 Whart. Evid., sect. 1245; *Gordon* v. *Parmelee*, 15 Gray (Mass.), 415.

High authority supports the proposition that when a presumption of fact exists against a party in a case of seizure *in rem*, the court may instruct the jury that the burden is on such party to remove the presumption, and that if he does not, the case must, in an issue in a civil case, go against him on such point. 1 Whart. Evid., sect. 871.

Whenever evidence is offered to the jury which is in its nature *prima facie* or presumptive proof, its character as such ought not to be disregarded; and no court has a right to direct a jury to disregard it, or to view it under any different aspect from that in which it is actually presented. *Crane* v. *Morris et al.*, 6 Pet. 598.

Prima facie evidence of a fact, says Mr. Justice Story, is such evidence as in judgment of law is sufficient to establish the fact, and, if not rebutted, remains sufficient for the purpose. 6 id. 632; *United States* v. *Wiggins*, 14 id. 334.

Suffice it to say, that the observations already made are sufficient to dispose of the exception to the ruling of the court in giving the second request presented by the prosecutor, without further examination.

4. The next error assigned is the eighth, which is that the court erred in charging the jury that the Orinoco tobacco, so called, would have been liable to a tax of thirty-five cents per pound; but the court here is of a different opinion.

Goods might be manufactured without being subject to tax, even if they were intended for sale, unless they were sold, consumed, or removed from the manufactory. 18 Stat. 264, sect. 94.

Articles, goods, &c., except where otherwise provided, which shall be produced and sold, or be manufactured or made and sold, or be consumed or used by the manufacturer or producer, or be removed for consumption or for delivery to others than agents within the United States, are declared by that section to be subject to such taxation.

Manufactured tobacco under that act, if made of the leaf with the stem taken out, or if sweetened, was subject to a duty

of thirty-five cents. Smoking-tobacco manufactured of leaf not stemmed, butted, or stripped was subject to a tax of twenty-five cents per pound.

Before the transaction referred to took place, the amendatory act of the 18th of July, 1866, was passed, which increased the rate of taxation on tobacco of the first-named class to forty cents per pound. Desiring to avoid the payment of the increased tax, the claimant executed the plan of a fictitious sale of a large quantity of tobacco which he had on hand, as a means of effecting that purpose. His own testimony explains the matter in substance and effect as follows: That the goods were never delivered to the purchasers, so called, and were never intended to be delivered, nor were they removed from his factory; that it was understood between him and those merchants that the goods were sold and bought back, and that he believed, though he was not positive about it, that he exchanged checks with them for the amount of the bill; that the proceeding was for the purpose of returning the tobacco as sold in his current monthly return for taxation, in order to avoid payment of the increased rate of duty to which the same would be liable when the new revenue act took effect.

Sales of personal property merely colorable, made with the intention that the title should not be transferred in reality but only in appearance, convey no title whatever to the apparent purchaser. *Hyam's Case*, 1 De G., F. & J. 79; *Bowes* v. *Foster*, 2 H. & N. 783; *Cox* v. *Jackson*, 6 Allen (Mass.), 109.

Throughout, the title was undeniably in the claimant; and if the tobacco was goods in his possession, it is clear that it was subject to taxation under the new revenue act, as the new act, if the duty imposed by either of the two preceding acts had not been paid, provides that all manufactures and productions on which a duty was imposed by either of the preceding acts, repealed by that act, in the possession of the manufacturer or producer, or of his agent or agents, on the day when that act takes effect, shall be held and deemed to have been manufactured or produced after that date. 14 Stat. 173, sect. 70.

Viewed in the light of these suggestions, it is plain that the

instruction given is correct, and that the assignment of error must be overruled.

5. Though slightly different, the ninth, tenth, and eleventh errors assigned will be re-examined together.

Speaking of the fictitious sale, and the intent it was expected to accomplish, the judge remarked to the jury that it was his duty to say to them that the transaction was utterly illegal; in which the court here fully concurs. Coupled with the averred motive of the actor, it is clear that it was illegal to return the tobacco for taxation, for the reason that it had not been sold nor removed for consumption, nor indeed for any purpose, as it remained in the manufactory. Where the evidence is without conflict, and the facts are conceded or fully proved, it is a question of law whether they show a perfected sale. *Cutler* v. *Bean*, 34 N. H. 299; *Burrows* v. *Stebbins*, 26 Vt. 663; *Kaine* v. *Weigley*, 22 Pa. St. 188.

Persons engaged in the manufacture of such products are required to keep books, and to keep an account of goods manufactured and sold or removed; and the evidence showed in this case that the claimant did not in certain instances comply with those requirements, — which is a sufficient answer to the tenth assignment of error. Nor is it necessary to add any thing to show that the eleventh assignment of error is without merit, beyond what was remarked in response to the complaint set forth in the eighth assignment. Nor is it necessary to enter into any discussion of the twelfth assignment of error, as the remarks made respecting the ninth and tenth assignments apply with equal force to that ground of complaint.

6. Thirteen and fourteen of the errors assigned may also be classed together without inconvenience.

In the first of the two the complaint is that the judge remarked to the jury that, unless a record be kept of the manufactured goods, it is impossible for the manufacturer to comply with the requirements of law in respect to his returns. Such manufacturers are required by law to keep books; and if they fail to do that, and keep no record of their daily transactions, the expression of the judge is scarcely too strong, and was not one calculated to mislead the jury.

Quantities of granulated tobacco entered in the order-books

were not in the tax-books, so called, and large quantities entered in the tax-books could not be identified in the order-books, which a witness, when asked to explain the transaction, said it was part of a large mass taken downstairs into the retail department: and the complaint is that the judge remarked that it was an illegal mode of doing business, but such a remark can hardly be regarded as the subject of error when considered in connection with the full charge given to the jury; nor was the remark without justification, as the tobacco had not been returned for tax, as is admitted in the assignment of error.

7. Nothing need be remarked in response to the fifteenth and sixteenth assignment of errors, as the only complaint they contain is that the judgment is for the wrong party.

Suggestion was made during the argument at the bar that the court erred in not instructing the jury that they could not find that the property was forfeited unless the matters charged were proved beyond a reasonable doubt; but no such exception was taken at the trial, nor is any such complaint set forth in the assignment of errors; nor is there any thing in the case of *Chaffee* v. *United States* (18 Wall. 516) which conflicts in the least with the views here expressed, as is obvious from the fact that the two cases are radically different, the present being an information against the property, and the former an action against the person to recover a statutory penalty. Informations *in rem* against property differ widely from an action against the person to recover a penalty imposed to punish the offender. But they differ even more widely in the course of the trial than in the intrinsic nature of the remedy to be enforced.

Instructions of an entirely different character were given in that case, as, for example, the jury were told in effect that suspicious circumstances requiring explanation, if not explained, would supply by presumption what would be sufficient to warrant a verdict of guilty; that silence supplied, in the presumption of law, that full proof which should dispel all reasonable doubt, — making the inference to be drawn from silence one of law instead of fact. Palpable as those errors were, it is clear the decision of this court is correct.

Nor is there any thing in the case of *United States* v. *The Brig Burdett* (9 Pet. 682) that is in conflict with these several propositions. Charges of the kind contained in an information ought to be satisfactorily proved; and it is correct to say that if the scale of evidence hangs in doubt, the verdict should be in favor of the claimant, which is all that was there decided. Jurors in such a case ought to be clearly satisfied that the allegations of the information are true; and when they are so satisfied of the truth of the charge, they may render a verdict for the government, even though the proof falls short of what is required in a criminal case prosecuted by indictment. *Insurance Company* v. *Johnson*, 11 Bush (Ky.), 593.

Judgment affirmed.

COUNTY OF MACON v. SHORES.

1. Where, in an action against a county, to recover the amount due on coupons detached from bonds issued by it in payment of its subscription to the capital stock of a railroad company, the declaration avers that the plaintiff is a *bona fide* holder of them for value before maturity, and such averment is traversed, it is competent for him, notwithstanding the presumption of law in his favor, to maintain the issue by direct affirmative proof.
2. It is no defence to the action that the company, which was a *de facto* corporation when the subscription was made, had not been organized within the time prescribed by its charter, and that when the bonds were issued a suit to restrain the issue of them was pending, however it may have ultimately resulted, if the holder had no actual notice thereof, and was a purchaser of them for value before they matured.
3. Where the holder of the coupons, by producing them on the trial, and by other proof, shows a clear right to recover, and the matters put in evidence by the county do not tend to defeat that right, it is not error to instruct the jury to find for him.
4. The doings of a county court of Missouri can be shown only by its record.
5. Sect. 14, art. 11, of the Constitution of Missouri of 1865 did not take away from a county the authority, which had been previously conferred by statute, to subscribe for stock in a railroad company.

ERROR to the Circuit Court of the United States for the Western District of Missouri.

This was an action by John F. Shores, a citizen of New Hampshire, against the county of Macon, in the State of Mis-

souri, to recover upon certain overdue coupons, detached from bonds which had been issued by that county, May 2, 1870, payable at the National Bank of Commerce in New York City, May 2, 1890, — the interest payable there semi-annually, upon presentation of the coupons. The bonds, signed by the presiding justice and the clerk of the county court, under its seal, recite that they are "issued under and pursuant to orders of the county court of Macon County, for subscription to the stock of the Missouri and Mississippi Railroad Company, as authorized by an act of the General Assembly of the State of Missouri, entitled 'An Act to incorporate the Missouri and Mississippi Railroad Company,' approved Feb. 20, 1865." The declaration alleges that the county paid the interest on the bonds for the year 1870, and that the coupons sued on were, on their becoming due, presented at the place where they were payable, and that payment was refused. It also alleges that the plaintiff is the holder of the coupons for value.

The county answered, denying that it promised to pay said bonds; that they were issued pursuant to the orders of the county court; that the subscription was authorized by law; that any subscription was made or authorized to be made by order of the county court; and that the plaintiff was the holder for value of the coupons sued on. The answer then avers, in substance, that said bonds and coupons are fraudulent, and were issued in fulfilment of a combination, confederation, and conspiracy, entered into between a majority of the members of the county court and the railroad company, for the purpose of cheating and defrauding the county and its taxpayers, and pursuant to a pretended order of said court authorizing, without the assent of two-thirds of the qualified voters of the county, a subscription to the stock of said company, and the issue of bonds; that the building of the road as contemplated by the charter granted to the company by the act of Feb. 20, 1865, was "a wild or visionary scheme or enterprise;" that the company had, at the time of said pretended subscription, no corporate power or existence, never having organized or accepted said act of Feb. 20, 1865, within one year, as required by law, nor did it commence the transaction of its business within the time prescribed by law for that purpose;

that on June 11, 1870, a suit, in which process was duly served, was commenced in the Circuit Court of Macon County by two tax-payers, against the county court and the company, to annul the pretended order of subscription, and cancel the bonds, and that it was pending and undetermined when the plaintiff and those under whom he claims purchased the bonds and coupons; that said subscription not having been made by the assent of two-thirds of the qualified voters of the county, expressed at any election, was repugnant to the Constitution of Missouri; and that the plaintiff had due and full notice of the foregoing facts when he purchased the bonds and coupons.

The plaintiff filed a replication, denying all the allegations of the answer, and averring specially that he was a holder for value before maturity of the instruments sued on, without notice, actual or constructive, of the defences set up.

The plaintiff, to maintain the issue on his part, having produced one of said bonds and all the coupons sued on, the order of the county court of April 12, 1870, making the subscription, the resolution of the board of directors of the railroad company accepting the same, and the charter of the company, offered evidence to prove that he was a *bona fide* holder and owner for value before maturity of the coupons sued on, without notice. The county objected to the offered evidence, but the court admitted it. The county thereupon excepted.

The county then introduced evidence as to the alleged frauds and irregularities in issuing the bonds, and offered to prove by depositions what had taken place in the county court touching its action respecting said subscription. The plaintiff objected, on the ground that the proceedings of the court could be proved only by its record, or a certified copy thereof. The objection was sustained, and an exception noted.

The county then offered to prove that the company did not, as required by the statute of Missouri, organize and accept its charter within one year from the time of granting it; and that, at the time of making the subscription, the building of the road was a wild and visionary enterprise. It also offered to read in evidence the proceedings of public meetings of tax-payers and

citizens of various townships in Macon County, held between April 14 and June 6, 1870, and published in the Macon "Weekly Times" and the Macon "Weekly Journal," newspapers published in Macon City; to all of which offers the plaintiff objected, and the objection having been sustained by the court, the county excepted. The county then read in evidence a certified copy of the record of the suit against the county court and the railroad company, referred to in its answer. The evidence having been closed, the court, at the request of the plaintiff, instructed the jury that the evidence of the county was insufficient to support the defence, and that he was entitled to a verdict for the amount of the coupons sued on; to which instruction the county excepted. The jury returned a verdict for the plaintiff; and upon the judgment entered thereon the county sued out this writ, and here assigns for error that the court below erred —

1. In admitting evidence to prove that the plaintiff was a *bona fide* holder and owner for value before maturity of the coupons sued on without notice.

2. In excluding the evidence offered by the defendant at the trial of the cause.

3. In instructing the jury to find for the plaintiff.

4. In not giving judgment for the defendant.

5. In holding that the county court had authority to subscribe $175,000 to the capital stock of the Missouri and Mississippi Railroad Company, on the twelfth day of April, 1870, without the assent of two-thirds of the qualified voters of Macon County.

6. In not holding the subscription void on account of the fraud, bribery, and corruption by which it was secured, and the constructive notice thereof which the plaintiff below had.

The act of the General Assembly, mentioned in the bonds, contains the following section: —

"SECT. 13. It shall be lawful for the corporate authorities of any city or town, the county court of any county desiring so to do, to subscribe to the capital stock of said company, and may issue bonds therefor, and levy a tax to pay the same, not to exceed one-twentieth of one per cent upon the assessed value of taxable property for each year."

Sect. 14 of art. 11 of the Constitution of Missouri, which took effect July 4, 1865, is as follows: —

"The General Assembly shall not authorize any county, city, or town to become a stockholder in, or loan its credit to, any company, association, or corporation, unless two-thirds of the qualified voters of such county, city, or town, at a regular or special election to be held therein, shall assent thereto."

Mr. James Carr for the plaintiff in error.
Mr. John D. Stevenson, contra.

MR. JUSTICE SWAYNE delivered the opinion of the court.

The declaration in this case covers a hundred and eleven printed pages. Each count is upon a coupon averred to have been detached from a bond for $1,000, issued by the county of Macon on the 2d of May, 1870, and payable to the Missouri and Mississippi Railroad Company or bearer, at the National Bank of Commerce, in the city of New York, on the second day of May, 1890, with interest at the rate of eight per cent per annum, to be paid semi-annually on the presentation of the coupons attached. It is further averred that the bond was issued pursuant to the orders of the county court of Macon County, in payment of the subscription to the stock of the railroad company, and was authorized by the act of the General Assembly of the State, entitled "An act to incorporate the Missouri and Mississippi Railroad Company, approved Feb. 20, 1865," and that the bond so recites on its face.

It is also alleged that the defendant paid the interest on the bond for the year 1870, and that the plaintiff is the holder and bearer of the coupon for value. There are other averments which show the liability of the defendant and make the count good. The further counts are upon coupons taken from other bonds of the same issue. The counts are all alike *mutatis mutandis*.

The defendant filed a multitude of pleas. It is not necessary particularly to advert to any of them.

Upon the trial the defendant took an elaborate bill of exceptions.

Our remarks will be confined to the errors assigned.

The plaintiff had a right to prove that he was a *bona fide* holder of the coupons.

The petition averred the fact. It was denied by the answer. It is true the presumption of law, *prima facie*, was that the plaintiff was such holder. But if he chose to meet the issue by direct affirmative proof, it was clearly competent for him to do so.

The testimony tending to show fraud and irregularities touching the issuing of the bonds and in disposing of them was properly rejected. The plaintiff being a *bona fide* holder of the coupons, it was incompetent to affect his rights. He could not be expected to know, and was not bound to know, the facts sought to be established. So far as the testimony respected the action of the county court, it was liable to the further objection that a court of record can speak, and its doings can be shown, only by the record. None of the evidence offered was of this character. Irrelevant and incompetent testimony should always be carefully excluded, because the tendency of both is to mislead and confuse the minds of the jury, and thus defeat the ends of justice.

The objection that the corporation was not organized within the time limited by the charter is unavailing. It is in effect a plea of *nul tiel* corporation. In *Kayser* v. *Trustees of Bremen* (16 Mo. 88), the Supreme Court of the State said: "It cannot be shown in defence to a suit of a corporation that the charter was obtained by fraud; neither can it be shown that the charter has been forfeited by misuser or nonuser. Advantage can only be taken of such forfeiture by process on behalf of the State, instituted directly against the corporation for the purpose of avoiding its charter; and individuals cannot avail themselves of it in collateral suits until it be judicially declared." See also *Smith et al.* v. *County of Clarke* (54 Mo. 58), which is to the same effect. This case being a Missouri case, these authorities are conclusive. *Olcott* v. *Bynum et al.*, 17 Wall. 44.

The learned counsel for the plaintiff in error could hardly have been serious in insisting that proof that the road authorized by the charter to be built "was a wild and visionary enterprise," and that meetings of tax-payers denouncing the

issuing of the bonds was competent in the case as it stood for any purpose. No further remark upon the subject is necessary.

The proceedings in *Newmeyer et al.* v. *Missouri & Mississippi Railroad Co. et al.*, reported in 52 Mo. 81, offered in evidence, decided nothing finally. The bill of the complainants was demurred to by the defendants. The demurrer was overruled and the case remanded to the lower court. Whatever the result, it could not affect the rights of a *bona fide* purchaser of the bonds and coupons without notice.

The objection claimed to arise from the Constitution of 1865 is without foundation. That instrument took effect on the 4th of July, 1865, and the act of incorporation on the 20th of February of that year. The Constitution looked entirely to the future. Its language is: "The General Assembly shall not authorize," &c., . . . "unless two-thirds of the qualified voters of such county, city, or town, at a regular or special election to be held therein, shall assent thereto." Const. Mo., sect. 14, art. 11.

The act was in the past. The Constitution, therefore, had no effect upon it. This point has been so decided by the Supreme Court of Missouri and by this court, following the adjudication of that tribunal. *State of Missouri* v. *Macon County Court*, 41 Mo. 458; *State ex rel.* v. *Greene County et al.*, 54 id. 540; *County of Henry* v. *Nicolay*, 95 U. S. 619.

The thirteenth section of the charter authorized the county court to subscribe and issue the bonds. No limit is prescribed either as to the time or amount of the subscription.

The court instructed the jury to find for the plaintiff.

It appears that the evidence is all in the record. The plaintiff had shown a clear right to recover. The defendant had shown no defence. There was no question for the jury to pass upon.

Under these circumstances, it is always competent for the court to instruct accordingly, and it is not error to do so. *Merchants' Bank* v. *State Bank*, 10 Wall. 604; *Railroad Company* v. *Jones*, 95 U. S. 439.

This court has repeatedly held that where a corporation has

power under any circumstances to issue such securities, the *bona fide* taker has a right to presume they were issued under circumstances which gave the requisite authority, and that they are no more liable to be impeached for any infirmity, in the hands of the holder, than any other commercial paper. *Supervisors* v. *Schenck*, 5 Wall. 772.

The function of making the subscription and issuing the bonds was confided to the county court. They had jurisdiction over the entire subject. They were clothed with the power and duty to hear and determine. The power was exercised and the duty performed. In this case, as it is before us, the result is conclusive, and the county is estopped to deny that such is its effect. *Lynde* v. *The County*, 16 Wall. 6.

Where a loss is to be suffered through the misconduct of an agent, it should be borne by those who put it in his power to do the wrong, rather than by a stranger. *Hern* v. *Nichols*, 1 Salk. 289; *Merchants' Bank* v. *State Bank*, *supra*.

In *Steamboat Company* v. *McCutchen & Collins* (13 Pa. St. 13), the company, which was a corporation, had occupied for a term agreed upon, as an office, premises belonging to the other parties. When sued for the rent, the corporation set up as a defence that the contract was *ultra vires*, and claimed exemption from liability upon that ground. Coulter, J., in the opinion of the court affirming the liability, said: "Some things lie too deep in the common sense and common honesty of mankind to require either argument or authority to support them, and this, I think, is one of them."

Judgment affirmed.

CHABOYA v. UMBARGER.

A claim under a Mexican grant was, in 1862, confirmed by this court to A. to the extent of five hundred acres of land. The title thereto was afterwards transferred to B., who brought ejectment therefor against A. The latter offered in evidence a duly certified copy of a decree of the District Court, rendered in pursuance of a mandate of this court of the 13th of June, 1866, confirming the title of the city of San José, as a successor of the Mexican pueblo of that name, to certain lands or commons belonging to the pueblo, the out-boundaries of which included the demanded premises; but the decree excepted from the confirmation all parcels vested in private proprietorship, under grants from lawful authority, which the tribunals of the United States had finally confirmed to parties claiming under such grants. *Held*, that the offered evidence was properly excluded.

ERROR to the Supreme Court of the State of California.

The facts are stated in the opinion of the court.

Mr. S. O. Houghton for the plaintiff in error.

Mr. William Matthews, *contra*.

MR. JUSTICE MILLER delivered the opinion of the court.

Pedro Chaboya obtained in this court, at its December Term, 1862, the confirmation of his title to five hundred acres of land under claim of a grant of the Mexican government. 2 Black, 593. The proceeding was commenced before the board of land commissioners under the act of 1851, and they decided against him. On appeal to the District Court, it was found that the land was misdescribed in his petition to the board; and that court held that it had no jurisdiction on appeal to confirm any other land than that mentioned in the petition. An act of Congress, passed to remedy this defect, authorized the District Court to hear and decide his claim to the land known as La Posa San Juan Bautista. 12 Stat. 902.

This claim was for about two leagues. The District Court confirmed his claim to five hundred acres, part of the tract known as La Posa de San Juan Bautista, and rejected the remainder of it. On cross-appeals, by the United States and by Chaboya, the decree of the District Court was affirmed.

Chaboya having parted with the title thus confirmed to him, but retaining possession of the property, the present defendants in error, in whom that title had become vested, instituted a suit

against him and others in the proper State court of California to obtain possession of the land.

In this action they were successful; and Chaboya and his co-defendants having carried the case to the Supreme Court of California without success, have brought it here by writ of error to that court.

The title relied on by Chaboya as a defence to the action was a decree of the District Court of the United States for the Western District of California, rendered in pursuance of a mandate of this court on the thirteenth day of June, 1866. The rejection of a properly certified copy of this decree by the court when offered in evidence by plaintiffs in error is one, if not the only, error to be considered here.

The case in which that decree was rendered originated in a petition of the mayor and council of the city of San José to the board of commissioners already mentioned, for the confirmation of the title of said city as the successor to the Mexican pueblo of that name, to certain lands or commons belonging to the pueblo. The out-boundary of this decree, as finally settled by the Supreme Court, included the land now in controversy, which was then, as it had been for a long time before, in the possession of Chaboya and his family.

That decree, however, excepted from this confirmation certain specified ranchos, "and also such other parcels of land as have been, by grants from lawful authority, vested in private proprietorship, and have been finally confirmed to parties claiming under said grants by the tribunals of the United States, or shall hereafter be finally confirmed to parties claiming thereunder by said tribunals, in proceedings now pending therein for that purpose; all of which said excepted parcels of land are included in whole or in part within the boundaries above mentioned, but are excluded from the confirmation to the mayor and common council of the city of San José."

As Pedro Chaboya had set up a grant from the Mexican authorities of this five hundred acres, and as it had been confirmed to him by the Supreme Court of the United States, the highest tribunal to whom such questions could be submitted, it would seem that it was excluded from the confirmation of the pueblo title, and that the court was right in rejecting the

decree as evidence of title to that land. On the face of the matter, as thus stated, the court was clearly right.

But it is said in opposition to this view of the matter, that the District Court, when it confirmed the title of Chaboya, was acting upon a matter wholly beyond its jurisdiction; that its decree was therefore void; and that grants not vested in private proprietorship by lawful authority, and not confirmed by tribunals authorized to do so, are not among those excluded from confirmation by the decree in the San José case.

It would be a very strained construction of the words used in that decree to hold that, when it excludes from its operations private land-claims confirmed by the tribunals of the United States, it was intended to leave open in each of said cases an inquiry into all the circumstances which authorized the act of confirmation. The word "tribunals" was evidently selected with reference to several bodies which had authority to make such confirmation. The Congress of the United States, the Supreme Court, the District Court, and the board of land commissioners had each authority to confirm titles originating under the Mexican government. The purpose of the excepting clause in the decree was not to give any additional validity to these confirmations, nor to determine whether they had been rightfully made, but to prevent any conflict between the decree the court was then rendering and that of any other lawful tribunal which had acted on the same subject. It was as much the intention to prevent a conflict of jurisdiction as a conflict on the merits. It was intended to say, that as to any parcel of land which had been confirmed to private parties by one of these tribunals, we leave it where we find it. We make it neither better nor worse. If the confirmation gives a good title, we cannot impair it. If it gives no title, the rival claimants must be left to their rights without embarrassment by the present decree. That this was the meaning of the court is evident from the exclusion of land to which claims shall hereafter be confirmed by those tribunals.

Whether, therefore, the case of Chaboya was strictly within the power conferred on the District Court or not when it rendered its decree may be a matter of inquiry when that decree is produced as a source of title, but is not material in ascer-

taining whether the land embraced in it was excluded from the decree of the same court in the San José case. That court having confirmed this five hundred acre tract to Chaboya, would very naturally exclude it, with other confirmed claims, from the operation of the decree rendered four years later.

But whether this be so or not, it is said that, Chaboya being in possession, the plaintiff must recover on the strength of his own title, and that as he bases that title solely on the decree of 1862, in favor of Chaboya, it is pertinent to inquire into the jurisdiction of the court which rendered that decree. As plaintiffs in error claim nothing under that decree, we are not prepared to admit that they can bring the case to this court on that question.

But we may as well say that we are of opinion that it comes within the case of *Lynch et al.* v. *Bernal et al.*, 9 Wall. 315. That was a case construing a decree confirming the title of the city of San Francisco to pueblo lands, with precisely the same excepting clause. And the same point was there presented, that the lot in question, being a pueblo lot, was not within the jurisdiction of the board of commissioners who had confirmed the title to a private party. But the court said that if the person whose claim was confirmed asserted a claim adverse to that of the pueblo, it was within the jurisdiction.

In the case before us, Chaboya asserted a claim to a ranch of over two leagues in extent, called and known in all the proceedings as La Posa de San Juan Bautista. His claim was confirmed as to five hundred acres of it. It was surely within the jurisdiction of that court to determine not only the extent of that claim, but also whether it was a part of the ranch or of the pueblo lands, and whether it was a private claim, or held in subordination to the pueblo of San José.

The same court — the District Court — had jurisdiction of both classes of petitions on appeal. It could adjudicate the right of Chaboya on his petition, but on that petition it must not grant him a confirmation of a pueblo lot, unless he held adversely to the pueblo. It could confirm the claim of the pueblo lots on petition of the pueblo or its successor, the city. But it had the right to exclude from its confirmation lots or parcels of land already sold, confirmed, or adjudicated to others. Taking these

two decrees together, we can entertain no doubt that it had jurisdiction to confirm the title of the five hundred acres to Chaboya on his petition, and did so; and that it had the right to exclude it from the confirmation to the city, and did so.

We make no special reference to the act of April 25, 1862, under which the District Court heard Chaboya's claim; for, except the use of the phrase "La Posa de San Juan Bautista," as descriptive of the ranch in question, the court was to be governed by the same rule as if a proper petition had been filed before the board of land commissioners.

We see no error in the questions of Federal cognizance brought before us, and the judgment of the Supreme Court of California is

Affirmed.

UNITED STATES v. MEMPHIS.

1. In March and July, 1867, A. entered into contracts with the city of Memphis to pave certain streets. Most of the work was done after the passage of an act of the legislature of Tennessee of Dec. 3, 1867, by which contiguous territory was annexed, and designated as the ninth and tenth wards of the city, but none of it was done in them. An act of the legislature of Dec. 1, 1869, declared that the people residing within the limits of them should not be taxed to pay any part of the city debt contracted prior to the passage of said act of 1867. In March, 1875, A., in whose favor a decree against the city for the money due him for work done under his contracts had been rendered, obtained a *mandamus* commanding the city to levy a tax for its satisfaction. *Held*, 1. That the debt which the decree represents was contracted in March and July, 1867. 2. That the purpose of the act of 1869 was to relieve that territory from municipal obligations previously incurred for objects in which it had no interest when the obligations were assumed, and in regard to which it had no voice. 3. That no contract relation ever existed between A. and the people of that territory. 4. That the act of 1869 interfered, therefore, with no vested rights, impaired the obligation of no contract, and violated no provision of the Constitution of that State in regard to taxation.
2. The action of the court below, in excluding from the operation of the *alias* writ of *mandamus* the property on which the assessments by the front foot for the cost of the pavement had been paid, having been had in compliance with the petition of A., he cannot be permitted to complain of it here.
3. Whether the basis of the levy was to be the assessment of 1875 or that of 1876 is a matter of no importance. The rights of A. were secured by the requirement of the writ, that the city should levy a tax sufficient to yield to him the sum therein mentioned.

ERROR to the Circuit Court of the United States for the Western District of Tennessee.

Pursuant to the mandate in *City of Memphis* v. *Brown* (20 Wall. 290), the Circuit Court of the United States for the Western District of Tennessee passed a decree, March 16, 1875, in favor of Brown against the city, for $292,133.47, and costs, in payment for work done in laying certain pavements in said city. Execution was issued, and returned no property found. March 22, Brown applied for an alternative writ of *mandamus* to compel the city to pay the decree, or, in default thereof, to levy and collect, as authorized by the act of the legislature passed March 18, 1873, a tax apportioned to the years 1875, 1876, and 1877, in addition to all other taxes, sufficient in amount, after making due allowance for all delinquencies, insolvencies, and defaults, to realize $125,000 each year, and pay the same over to him as fast as collected, or so much thereof as may be necessary for the purpose of satisfying the decree. The writ issued March 26, and on the same day the city filed an answer setting forth that its treasury was empty, and its power of taxation — which, for general purposes, was limited to one per cent on all taxable property — exhausted; that it was a misdemeanor to apply special taxes for any other object than that for which they had been levied; that said act of March 18 had been repealed; that the sum of $375,000 commanded to be raised by the writ exceeds the amount of the decree by $83,133.47; that pursuant to a former mandate, issued in 1873, the city levied a tax of seven mills per cent for the year 1873, and three mills per cent for the year 1874, in favor of Brown, and that there is an uncollected balance on said levies of $170,000, all of which is on account of his decree or claim now sought to be enforced, and which is being collected and paid over to him as fast as possible; that there has been collected and paid over to him from said levies about $132,742.69, and if respondents are required now to relevy the same burdensome tax on those who have paid, it will be doing a great injury to the prompt tax-payer, and will operate as an inducement to tax-payers to resist the payment of the tax; that by the provisions of the law governing the city, the ninth and tenth wards, generally denominated as the new limits.

are exempt from the payment of any tax to pay for certain indebtedness of the city, and that the writ does not show whether the indebtedness is one of the excepted classes or not, and the determination of this question is a judicial one, which respondents cannot safely decide for themselves, and should be determined upon the face of the writ; that when the contract was made for the laying of said pavements, by which the aforesaid debts became due to him, it was understood and stipulated that the owners of abutting property should pay for the pavement in front of each lot; that many persons paid for such pavement according to the terms of the contract, and when the act of March 18, 1873, was passed, it provided that such persons as had paid for the pavement and held receipts therefor might be excused or released from paying the tax levied to pay for such pavement, — wherefore respondents cannot levy and collect from all persons subject to pay taxes the tax as commanded by the writ, and therefore cannot obey the writ.

Brown demurred to the answer, on the ground that said act gave full power to levy the tax, and that the legislature could not repeal it so as to defeat his rights; that the court could not consider past levies which had not been paid; that said act makes no discrimination in favor of any person or class of persons; and that the voluntary payment of the special assessments was no defence to a lawful levy of taxes for the payment of his decree. The demurrer having been sustained, a peremptory writ was issued, March 30, 1875, commanding that the city and its general council "proceed each for the ensuing three years, to wit, 1875, 1876, 1877, respectively, at the same time and in the same manner that other taxes are assessed and levied and collected, to assess, levy, and collect upon all the property within the city taxable by law, a tax, in addition to all other taxes allowed by law, payable in lawful money of the United States of America, sufficient in amount, after making due allowance for all delinquencies, insolvencies, and defaults, to realize $125,000 each year, for the years 1875 and 1876 respectively, and so much of the said sum for the remaining year, to wit, 1877, as may be required or necessary to pay and satisfy the balance of the said decree, including interest and costs,

not satisfied by the taxes collected and paid over during the two preceding years."

It was further ordered that a writ for each of said years should be issued by the clerk, upon the request of Brown. The writ for 1875 was issued June 28, and served the next day. On December 10, the city passed an ordinance "that a special tax of fifty-four cents on the one hundred dollars' worth of property be and the same is hereby levied for the forty-eighth corporate year (1875), for the purpose of paying $125,000 of the decree rendered by the United States Circuit Court in favor of T. E. Brown against the city, as required by the writ of *mandamus*."

Feb. 9, 1876, the city filed a return to the last-mentioned writ, setting forth the passage of the above ordinance, and alleging that proceedings were being had to collect the tax thereby imposed; that by an act of the legislature passed Dec. 8, 1867, certain new territory was added to the corporate limits of the city, and designated as the ninth and tenth wards thereof; that by an act of the legislature passed Dec. 1, 1869, it was enacted that the people residing within such addition should not be taxed for any part of the debt of the city, or interest thereon, contracted prior to the passage of the act of Dec. 8, 1867; that in March and July, 1867, the city entered into contracts with certain parties, whereby they undertook to pave streets with Nicholson pavement, — which contracts were, with its consent, transferred in June, 1868, to Brown; that although some portion of the work was done after the passage of the act of Dec. 8, 1867, the greater portion was done prior thereto, and none of it in the ninth or tenth wards; that pursuant to an act of the legislature passed Nov. 24, 1866, the contracts provided that the cost of the paving was to be borne by the owners of the lots abutting on the streets to be paved, according to frontage, the cost to be paid by a specific assessment on each lot and the owner thereof, one-half to be paid in cash on the completion of each section of pavement, and the other in thirty, sixty, and ninety days thereafter, in equal instalments; that a large number of said owners paid for the work in that manner, but that others having refused so to pay, and suit having been brought to so compel them, the Supreme Court of Tennessee declared said

act of 1866 unconstitutional and void, and that the sums so due must be raised by general taxation; that the act of March 18, 1873, was thereupon passed, empowering the city to levy a tax in addition to all other taxes allowed by law, sufficient to cover the entire cost of said pavements; that on March 20, 1875, the act of 1873 was repealed, and that suits were then pending to restrain the levy of any tax on the property of those persons who had paid to the contractors. This return was, on motion of Brown, stricken out. He then filed an affidavit setting forth his belief that the tax of fifty-four cents on the one hundred dollars' worth of taxable property was insufficient to pay the sum for the year 1875, required by the peremptory writ to be paid on his decree; that the value of the entire taxable real and personal property in the city, including the $2,000,000 in the ninth and tenth wards, was $23,000,000; but that from the operation of said tax the property in said wards and that of persons who had paid the special assessments, as well as the taxable capital of merchants, was excepted. He therefore prayed for an "*alias* writ of *mandamus* commanding the city of Memphis and its mayor and general council to make a further or additional levy of taxes on all the taxable property of the city of Memphis, including the capital of merchants as taxable, and excluding the property in the ninth and tenth wards of the city, and the property aforesaid on which the said special assessments for the Nicholson pavement costs were so paid, as exempt from such taxation, such an amount in addition to the levy already made as will be sufficient to pay to him the entire sum of $125,000, to which he was entitled as aforesaid; and that the said levy may be made upon the taxable property as assessed and returned for the year 1875, and may not be further postponed."

On March 2, 1876, the court ordered "that an *alias* peremptory writ of *mandamus* do forthwith issue, directed to the city of Memphis, and the mayor and general council, commanding them to proceed, when they next levy taxes, to levy, in addition to the tax already levied for the payment of the plaintiff's decree under the requirements of the original writ herein issued, a further tax on all the taxable property of the city, excluding from such taxable property the property of persons residing in

the ninth and tenth wards of the city, and the property on which the assessments for the payment of the costs of the Nicholson pavement have been paid, the same being, as the court adjudges, exempt from taxation for the payment of the said decrees, sufficient in amount, when added to the tax heretofore levied under the original writ, to yield to the plaintiff $125,000; and to collect the said taxes so to be levied as speedily as the same can lawfully be done, and to pay over to the plaintiff forthwith, from time to time as the same may be received, the sums collected, taking his receipt therefor; and that they make due return to the court herein, on the return-day of the writ, of the manner in which they have obeyed the same."

The United States, on the relation of Brown, thereupon brought the case here, and assigned errors as follows:—

The court erred—

1. In excluding from the *alias* writ of *mandamus* the property in the ninth and tenth wards of the city as exempt from taxation.

2. In excluding the property on which the assessments by the front foot for the cost of the pavement had been paid.

3. In declining to order the additional levy to be made on the assessment for 1875.

Mr. William M. Randolph for the plaintiff in error.

Mr. W. Y. C. Humes and *Mr. S. P. Walker*, *contra*.

MR. JUSTICE STRONG delivered the opinion of the court.

By the *mandamus* awarded on the 30th of March, 1875, the city was commanded "to levy and collect upon all the property within the city taxable by law, a tax, in addition to all other taxes allowed by law," sufficient in amount to pay the relator's judgment. In obedience to this mandate the general council of the city passed an ordinance levying a tax of fifty-four cents on each one hundred dollars' worth of property, and proceeded to collect it. But the relator, thinking this tax insufficient to raise the sum required by the writ to be raised, applied to the court for an *alias* writ, commanding an additional levy of taxes upon all the taxable property of the city, including the capital of merchants as taxable (but excluding the property in the ninth and tenth wards, and the property upon which special

assessments had been made and paid), sufficient in amount to pay the sum required to be paid by the original writ. In compliance with this application such an *alias mandamus* was ordered by the court, and he now complains that the court erred in ordering the levy, excluding the property in the ninth and tenth wards. Those wards were no part of the city when the contracts were made, in virtue of which the relator's rights accrued. The territory embraced within them was added to the city by an act of the legislature of Dec. 8, 1867, and by a subsequent act passed Dec. 1, 1869, it was enacted that the people residing within the limits of the addition to the city made by the act of 1867 shall not be taxed to pay any part of the debt of the city contracted prior to the passage of the said act. In view of this legislation the inquiry arises, whether the property within those wards is by law exempt from taxation for payment of the debt due the relator, for the *mandamus* directed the levy of a tax only upon property taxable by law. To respond intelligently to this inquiry, the nature and origin of the debt must be considered.

In the months of March and July, 1867, the city entered into contracts with two firms, by which they undertook to pave certain streets with Nicholson pavements. These contracts, with the consent of the city, were assigned to the relator in 1868, and under them the streets were paved. Some of the work was done and some of the materials were furnished before the passage of the act of 1867, but much the greater portion was done thereafter. None of the pavements were laid in the ninth or tenth wards. It was for the work done and materials furnished under these contracts, and in consequence of the city's liability assumed in them, that the relator's judgment was recovered on the 16th of March, 1875. Such, in brief, was the origin and nature of the debt.

Though in large part the pavements were constructed after the ninth and tenth wards became a part of the city, we think, within the meaning of the act of 1869, the debt must be held as having been contracted when the contracts were made. It was then the city assumed the liability and took up the burden which is now in judgment. It appears quite plainly that the legislature, in the act of 1869, did not intend to use the word

"debt" in its technical sense. Looking at the spirit of the act rather than to its letter, the purpose evidently was to relieve the new territory brought into the city by the act of 1867 from obligations previously incurred by the city for objects in which the added territory had no interest when the obligations were assumed, and in regard to which it had no voice.

It is true the act of 1867, which made the ninth and tenth wards a part of the city, did not itself exempt them from any of the liabilities of the municipal corporation of which they became a part. It might have given such an exemption. But no discrimination was then made in their favor. The people resident in them became at once entitled to a common ownership of the city's property and privileges, subject to the same duties as those resting on others. Had the act of 1869 never been passed, it must be conceded they would have been on an exact equality with all other owners of property in the city, equally entitled with them to all municipal rights and privileges, and equally subject to all municipal burdens and charges. See cases collected in Dillon on Municipal Corporations, sects. 36, 136, 633, 634.

That act, however, was passed. In terms it relieved the people of the ninth and tenth wards from liability to pay any part of the debt of the city contracted before they came into it. It is still the law of the State, unless it violates some provision of the Constitution. The relator contends that it is in conflict with the ordinance that "no retrospective law, or law impairing the obligation of contracts, shall be passed." To this we cannot assent. The act was wholly prospective in its operation when it was passed. It furnished a rule only for the future, and it interfered with no vested rights, or with the obligation of any contract. There never was any contract relation between the people of those wards and Brown, the relator. The utmost effect of the act of 1867 was to give the contractors with the city, after their contracts were made, a possibly enlarged remedy; and the act of 1869 withdrew the gift before any absolute right to it had been acquired, before the act of 1873 was passed, — the act which authorized taxation to pay the debt contracted. The same power which added the wards to the city might have severed them from it. Had they been parts of the city when

the contracts were made, and subsequently been severed from it, no one could successfully contend they would have remained liable to city taxation for any city purpose. It is evident, therefore, that neither any vested right nor any contract obligation was disturbed by the act of 1869, which declared those wards exempt from taxation for any debt contracted before they were incorporated into the city.

Nor do we perceive that the act of 1869 violated any other provision of the State Constitution to which our attention has been called. It was not a law for the benefit of individuals, inconsistent with the general laws of the land; nor did it grant immunities or exemptions not extended to all individuals in like condition; nor did it deprive any person of property without the judgment of his peers or the law of the land.

It has been argued on behalf of the relator that the act violated the principles of taxation established by the Constitution, requiring taxation of all property within the taxing district, forbidding the exemption of any except such as the Constitution declares may be exempted, and requiring that taxes shall be equal and uniform. We have not been able to feel the force of this objection. We find nothing in the provisions of the Constitution to which we have been referred that justifies it. Surely the legislature is not prohibited from declaring what districts shall be liable to taxation for local uses, and the act of 1869 was but an exertion of this power.

The second assignment of error is that the *alias* writ of *mandamus* commanded the levy of the additional tax, excluding from its operation the property on which the assessments by the front foot for the cost of the pavement had been paid. Whether the exclusion was erroneously directed or not we are not now called upon to determine, for the relator cannot be heard to insist that it was. The action of the court was in this particular exactly what he asked. He presented a petition asking that such property should be excluded from the levy, and he cannot now be permitted to complain in this court of an order made in the inferior court at his instance.

The remaining assignment of error is that the court ordered the additional levy to be made on the assessment for 1876, instead of the assessment for 1875. It does not appear certainly

that such was the order of the court. It was made on the 2d of March, 1876, and it directed the mayor and council to levy the additional tax when they next levied taxes. Whether the basis of the levy was to be the assessment of 1875 or that of 1876 is not clear, nor is it a matter of any importance. It is not claimed that the aggregate assessment for the latter year was less in amount than that of the former. It is not, therefore, apparent that the relator was hurt by the order. The city is required to levy a tax sufficient in amount to yield to him the sum mentioned, and that secures his rights.

Judgment affirmed.

MEMPHIS v. UNITED STATES.

1. Vested rights acquired by a creditor under and by virtue of a statute of a State granting new remedies, or enlarging those which existed when the debt was contracted, are beyond the reach of the legislature, and the repeal of the statute will not affect them.
2. Sect. 49 of the Code of Tennessee, declaratory of the law of that State respecting the effect of repealing statutes, is in accord with this doctrine.
3. On March 16, 1875, A. obtained a decree against Memphis for the payment to him of $292,133.47, for materials furnished and work done under contracts entered into with that city in 1867 for paving certain streets. Execution having been issued, and returned unsatisfied, the court, on the 22d of that month, awarded an alternative writ of *mandamus*, to compel the city to exercise the power conferred by an act of the legislature passed March 18, 1873, and levy "a tax, in addition to all taxes allowed by law," sufficient to pay the decree. The city answered that said act had been repealed by one passed March 20, 1875, and that the tax which, by the act of Feb. 13, 1854, it was authorized to levy for all purposes had been levied, and its powers were therefore exhausted. A. demurred to the answer; the demurrer was sustained, and the writ made peremptory March 30, 1875. The act passed March 20, 1875, was approved by the governor of the State on the twenty-third day of that month. *Held*, 1. That the repealing act did not become a law until its approval by the governor. 2. That prior thereto, A., by his decree and the alternative *mandamus*, which was a proceeding commenced by virtue of the act of March 18, 1873, had acquired a vested right, which was not defeated by the repealing act, to have a tax, payable in lawful money, levied sufficient to pay him, although it required the levy of a tax beyond the rate mentioned in the act of 1854.

ERROR to the Circuit Court of the United States for the Western District of Tennessee.

The facts involved in this case are the same as those in *United States* v. *Memphis*, *supra*, p. 284.

The city of Memphis, by whom this writ was sued out, assigns the following errors: —

The court below erred —

1. In holding that the city of Memphis had the power or was under the duty of levying the tax, as adjudged.

2. In holding that the legislature had no power to repeal the act of March 18, 1873.

3. In adjudging that the tax to be levied should be payable only in lawful money of the United States, as the act of March 18, 1873, required the city of Memphis to receive, in payment of the tax therein authorized, "any sum or sums, with interest, paid by persons in satisfaction, or part satisfaction, of said special assessments, illegally levied and collected as aforesaid."

4. In holding that a new and further tax be laid, sufficient to pay the entire decree, for $292,133.47, the return to the alternative writ disclosing that under a former mandate of the court the city had made a special levy of $302,742.69, for the purpose of paying the decree; that of said levy $132,742.69 had been collected and paid over, and the remainder, $170,000, was being collected and paid over as rapidly as possible.

5. In awarding the writ of *mandamus* commanding the levy of a tax sufficient in amount, after making due allowances for all delinquencies, insolvencies, and defaults, to pay the decree.

6. In awarding the peremptory writ of *mandamus*.

Mr. W. Y. C. Humes and *Mr. S. P. Walker* for the plaintiff in error.

Mr. William M. Randolph, *contra*.

MR. JUSTICE STRONG delivered the opinion of the court.

The important question in this case is, whether the law of the State empowered the city of Memphis to levy the tax which by the writ of *mandamus* it was commanded to levy. If it did not, the award of the writ cannot be sustained, for a *mandamus* will not be granted to compel the levy of a tax not authorized by law.

By an act of the legislature passed on the 18th of March, 1873, it was enacted as follows: —

"That where an incorporated town or city has, by virtue of presumed authority to lay special assessments for specific purposes, levied and collected taxes or special assessments, the right to make which levy and assessment was afterwards declared void by the Supreme Court of the State, said town or city shall have the power to levy a tax, in addition to all other taxes allowed by law to be levied, sufficient to cover the entire cost of the improvement, with interest thereon, for which said special assessments were illegally made, and in the levying of such additional tax authority is hereby given to such town or city to allow as valid payments on said additional tax any sum or sums, with interest, paid by persons in satisfaction, or in part satisfaction, of said special assessments, illegally levied and collected as aforesaid."

This statute, it is true, was not in existence when the plaintiff's contract with the city was made, but it is confessedly available for him, unless it was repealed before he acquired any rights under it. Plainly it was enacted to meet his case, and had there been no repeal, the question now raised would not be before us. It is claimed, however, that it was repealed before the Circuit Court awarded the *mandamus*, and what was the effect of that legislative action upon the power of the court in this case becomes therefore a very important question. It is an acknowledged principle that a creditor by contract has a vested right to the remedies for the recovery of the debt which existed at law when the contract was made, and that the legislature of a State cannot take them away without impairing the obligation of the contract, though it may modify them, and even substitute others, if a sufficient remedy be left, or another sufficient one be provided. The law is in effect a part of the contract. But it is not so clear that when a new remedy is authorized after a contract has been made, that remedy may not be wholly taken away by the legislature, before any vested rights have been acquired under it. In such a case the parties did not contract with reference to it, and it did not enter into their agreement. It had nothing to do with the obligations they assumed. It is, however, no less true that vested rights may be acquired by the creditor under it and by virtue of it; and when such rights have been acquired, they are beyond the reach of the legislature, and the repeal of the law will not affect

them. As to them the law continues in force, notwithstanding its repeal.

In this case the relator recovered his judgment against the city on the 16th of March, 1875. Into that judgment his contract was merged, and it no longer had any legal existence. If, as asserted by Blackstone, the judgment was itself a contract, the remedies for its enforcement, existing at the time when it was recovered, could not be taken away either by direct legislation, or indirectly, by repealing the law which gave those remedies. And if the judgment may not be considered a contract of record, still the vested rights it gave to the relator, whatever they were, are equally secure against legislative invasion.

After the judgment was obtained an execution was issued to collect the amount of it, and on the 22d of March, 1875, the alternative *mandamus* was issued to compel the levy of the tax of which the city now complains. It was not until after all this that the act of March 18, 1873, was repealed. The act repealing it was approved by the governor on the 23d of March, 1875, and it became a law only from the time of his approval. Such is the generally received doctrine. See cases cited in 4 Abb. Nat. Dig. 223. It is said, however, the rule in Tennessee is different; and it is contended that as the act passed the two Houses on the 20th of March, though not approved by the governor until the 23d, it took effect, by relation, on the day of its passage through the two Houses; and we are referred to *Dyer* v. *States*, Meigs (Tenn.), 237–255, and to *Turner* v. *Oburn*, 2 Coldw. (Tenn.) 460. Those decisions were under the Constitution of 1834, which did not require the approval of the governor, or a passage of the bill over his objection, to make a binding statute as the Constitution of 1870 does. It is true the earlier Constitution required the signature of an act by the respective speakers of the House. That was for the purpose of attestation only, and the act was then said to take effect on the day of its passage. The later Constitution demands the same signatures, and it demands more, namely, the approval of the governor. It also ordains that no bill shall become a law until it shall have received his approval, or shall have been otherwise passed under the provisions of the Constitution; that is, as we under-

stand it, over his refusal to approve. The executive is thus made a necessary constituent of the law-making power. If with this be considered the declaration of the Constitution, that no retrospective law, or law impairing the obligation of contracts, shall be made, the conclusion is inevitable, that the repealing act had no effect upon any thing that was done before March 23, 1875. But before that day we think the relator had acquired a vested right by his judgment and his alternative writ of *mandamus* to have a tax levied sufficient to pay the debt due to him from the city, — a right of which he could be deprived by no subsequent action of the legislature.

We do not deny that it is competent for a legislature to repeal an act which when it was passed was a mere gratuity, if while it was in existence no vested rights have been acquired under it or in virtue of it. But such, we think, is not this case. Indeed, there are very strong reasons for holding that the act of March 18, 1873, never was a gratuity. By the act of 1866 the legislature invited contracts with the city for grading and paving, offering to the contractors the security of assessments upon the owners of property abutting on the improved streets. No doubt it supposed it had the power to give such security or such a remedy to the contractor. No doubt both the city and the contractor thought such a power existed. It turned out that they were all mistaken. The contractor, by this mutual mistake, was led into the expenditure of much labor and money, and the city enjoyed the benefit of the expenditure. The security promised for reimbursement to him having failed, the legislature and the city having held forth unfounded expectations to him, by which he was induced to enter into the contract, there was the highest moral obligation resting alike upon the State and upon the city to provide a substitute for the remedy which had proved to be of no value. This substitute was provided by the act of 1873. It was merely adding a legal to a moral obligation. It should not be considered a mere gratuity. It took the place of a resort to abutting lot-owners, and if the contractor could not have been deprived of that, had it been authorized by the Constitution, the thing substituted for it should, in justice and common honesty, be regarded as equally

secure for his indemnity. But if we are in error in this, it is still enough that by his judgment and his writ of *mandamus* he acquired a vested right to have the tax collected which the writ ordered.

The Code of Tennessee, sect. 49, declaratory of the law of the State respecting the effect of repealing statutes, is as follows: "The repeal of a statute does not affect any right which accrued, any duty imposed, any penalty incurred, nor any proceeding commenced under or by virtue of the statute repealed." Thus has been established a rule for the construction of repealing statutes. If now the rule be applied to the act of March 23, 1875, it is manifest that act did not affect any right that had before its passage accrued to Brown, the relator, under or by virtue of it, or any proceeding commenced by him under it. But certainly under his judgment recovered in 1875 he had a right to have a tax levied sufficient to pay it, so long as the act of 1873 remained in force, and he had the right in virtue of that act. So when the alternative *mandamus* was issued, March 22, 1875, a proceeding was commenced under or by virtue of the statute. And if the repealing act affected that proceeding, or took away the right the relator had in force of his judgment, it was retrospective in its operation, and it was therefore prohibited by the Constitution. In *Fisher's Negroes* v. *Dabbs* (6 Yerg. (Tenn.) 119) it was said by the court that "a distinction between the right and the remedy is made and exists. But where the remedy has attached itself to the right, and is being prosecuted by due course of law, to separate between them and take away the remedy is to do violence to the right, and comes within the reason of that provision of our Constitution which prohibits retrospective, or, in other words, retroactive, laws from being passed, or laws impairing the obligation of contracts." *Vide Richardson* v. *The State*, 3 Coldw. (Tenn.) 122.

For these reasons we think that, so far as relates to the case of Brown, the relator, the act of March 18, 1873, remains in force, and that the city of Memphis has power under that act to levy and collect the tax which was directed by the *mandamus*.

The remaining questions in the case are of minor importance. It is said there was error in adjudging that the tax to be levied should be payable only in lawful money of the United States.

We do not perceive in this any error. The judgment of the relator could be paid only with such money; and the tax ordered was to be sufficient in amount, after making due allowances for all delinquencies, insolvencies, and defaults, &c., to realize $125,000 each year for the years 1875, 1876, respectively, and as much of said sum for the remaining year (1877) as may be required to pay and satisfy the balance of the decree in favor of the relator, with interest and costs, not satisfied by former taxes collected and paid. The meaning of the writ is, that sufficient money shall be collected. If the city elect to credit in payment of the levy what the lot-owners have paid, the *mandamus* does not forbid it; but a sufficient levy must be made and collected to raise in money the sums ordered to be paid in satisfaction of the decree in favor of the relator. This was plainly right.

The only other assignment worthy of notice is, that there was error in holding that a new and further tax be laid, sufficient to pay the entire decree for $292,133.47, the return to the alternative writ disclosing that under a former mandate of the court the city of Memphis had made a special levy of $302,742.69, for the purpose of paying the relator's decree; that of said levy $132,742.69 had been collected and paid to the relator, and that the remainder, $170,000, was being collected and paid over as fast as possible.

This assignment is manifestly evasive. The former mandate was not for the satisfaction of the decree of March, 1875. But if it was, it would make no difference. It is the most the city can ask, that it be assumed the former mandate had been obeyed, and that all had been collected that could be collected under the levy. What has not been, therefore, cannot aid in satisfying the decree, and it is not averred that any part of the $170,000 can be. Notwithstanding the *mandamus*, it is in the power of the city to relieve herself from its binding force by paying the debt due the relator. If she can collect any thing by virtue of past levies, to the extent of the collection she will be relieved from levying additional taxes, but the debt must be paid.

Judgment affirmed.

MEMPHIS v. BROWN.

A., having a decree against the city of Memphis for the payment of money, obtained, in March, 1875, a *mandamus*, commanding her to levy upon all the taxable property of the city a tax sufficient in amount to pay the decree. The city thereupon passed an ordinance levying a special tax, in professed conformity with the writ. A., finding that such special tax did not include merchants' capital, which, under the laws of the State, was taxable for general purposes, and that the required sum would not be raised, moved for a further peremptory *mandamus*, commanding that such merchants' capital, as assessed and returned for taxation for the year 1875, be included by the city within the property to be taxed for the payment of his decree, in accordance with the original writ. The court awarded the writ accordingly. *Held*, that the *mandamus* to compel the city to levy and collect the tax for the payment of the decree was process in execution, and that the court below rightfully exercised control over it in deciding that its order to levy a tax upon all the property of the city included the capital of merchants taxable under the laws of the State for general purposes.

ERROR to the Circuit Court of the United States for the Western District of Tennessee.

This case also involves the same general facts as those in *United States* v. *Memphis*, *supra*, p. 284.

On March 2, 1876, Brown filed an affidavit in the court below, that he was advised that the capital of merchants was legally taxable for the payment of his decree, and that the same tax should be levied and collected thereon for its payment as on other taxable property, and that the city of Memphis should be compelled by an *alias* writ to include that capital for such payment, and collect the tax thereon, and pay the same over to him, as commanded by the original writ, and that said levy be made upon the assessment as made and returned for the year 1875. The affidavit also set forth that theretofore only about sixty per cent of the taxes levied in the city had been collected; that after the withdrawal of the property in the ninth and tenth wards as exempt from taxation, and the exemption for the like reason of the property on which the special assessments had been paid, the entire residue (not including merchants' capital) was about $14,000,000, and that the money to be realized therefrom would scarcely exceed $45,000, instead of $125,000.

He therefore moved for an *alias* writ commanding such levy.

The court on the same day sustained the motion, and ordered that a peremptory writ of *mandamus* should issue, returnable to the next term of the court, commanding and requiring the city of Memphis to proceed forthwith to include within the property to be taxed for the payment of the said decree, in accordance with the peremptory writ of *mandamus* theretofore issued therein, the taxable capital of merchants for the year 1875, as theretofore returned and assessed by the city for taxation for other purposes, and to lay the same rate of taxation thereon for the payment of the decree that had been levied on the other taxable property of the city, and collect the said taxes so to be laid; and to pay the same over to the plaintiff forthwith as collected, according to the command of the said original writ.

On the 23d of that month the city passed an ordinance levying a tax of fifty-four cents on the hundred dollars of merchants' capital, "for the forty-eighth corporate year, 1875."

On the twentieth day of May following, the city submitted a motion in writing to set aside the order of March 2, and presented as an exhibit a copy of bill of complaint which sundry merchants of Memphis had filed in said court against the city and said Brown, wherein they, among other matters, allege that the order was improvidently issued, without any notice to them, and without process against the city, except the alternative writ of *mandamus;* and they prayed for a revocation of the order, and for an injunction against the city, to restrain it from attempting to levy the tax.

The court refused to set aside the order, but re-entered the same as its final judgment in the premises.

The city sued out this writ, and here assigns the following errors: —

The court below erred —

1. In ordering the levy of the tax of fifty-four cents on the one hundred dollars of taxable property, in excess of the $1.60 already levied.

2. In assessing the capital of merchants for the forty-eighth

corporate year, conformably to the rule prescribed by the act of March 25, 1873, inasmuch as said act was in conflict with the Constitution of the State.

3. In basing the order to levy the tax on the merchants on the *ex parte* affidavit of Brown, without making any of the merchants of Memphis parties to the cause, and without process against the city, except the original, alternative writ of *mandamus*.

4. In adjudging the property of any particular tax-payer, or class of tax-payers, liable to the tax in question.

Mr. W. Y. C. Humes for the plaintiff in error.

Mr. William M. Randolph, contra.

MR. JUSTICE STRONG delivered the opinion of the court.

In *Memphis* v. *United States* (*supra*, p. 293), we decided that the *mandamus* to compel the levy and collection of a tax beyond the rate mentioned in the act of Feb. 13, 1854, and sufficient to pay the judgment recovered by the relator, was authorized by the laws of the State, and was properly awarded. That decision covers the first assignment of error in this case, and leaves it without any foundation.

The other assignments are of minor importance. Some of them deny the power of the Circuit Court to define the extent of its own writ of execution. They assert that the court could not rightfully decide that its order to levy a tax upon all the property of the city meant to include the capital of merchants, taxable under the law of the State for other purposes. There is nothing in these objections. A *mandamus* to collect a tax for the payment of a judgment, or a *mandamus* to pay a judgment, is process in execution, and nobody heretofore has ever questioned the power of a court to control its own final process.

The only other question which requires attention is, whether in exercising that control the court erred by ordering that the taxable capital of merchants for the year 1875, as theretofore returned and assessed by the city for taxation for other purposes, be included within the property ordered to be taxed for the payment of the judgment. The allegation is, not that merchants' capital is not liable to taxation at a uniform rate

with other taxable property of the city, but that the statute of the State under which the assessment was made was unjust, oppressive, and in violation of the State Constitution. We are not convinced that this is a question we can consider in this case. The merchants do not appear to have made any complaint when taxes for general purposes were imposed. It is only when the special tax for the payment of the relator's judgment is ordered that they object. If the mode prescribed by the statute was in conflict with the State Constitution, they had a sufficient remedy in the State courts. To those courts they resorted (*Merchants* v. *The City of Memphis*, and *Schafer*, tax collector, a manuscript case decided by the Supreme Court at September Term, 1876); and we understand that court to have held, in substance, that the assessments were not illegal. Besides, we are not convinced that, if the question were an open one for our consideration, the mode prescribed by the statute for making the assessment was necessarily in conflict with the Constitution. The objection is therefore overruled.

We have considered the case without reference to the question whether the merchants who filed their bill against the city and Brown were in a situation to intervene in the action at law between Brown and the city, in the manner attempted by them. It may be doubted whether on their petition the court could be asked to correct its judgment in that case. But waiving this, we are of opinion that no error in the action of the court is shown.

Judgment affirmed.

TRUST COMPANY v. SEDGWICK.

The court adheres to its ruling in *Phipps* v. *Sedgwick* (95 U. S. 3), that, where a husband causes real estate to be conveyed to his wife in fraud of his creditors, a judgment *in personam* for its value cannot be taken, at the suit of his assignee in bankruptcy, against her, nor, in case of her death, against her executors.

APPEAL from the Circuit Court of the United States for the Southern District of New York.

The facts are stated in the opinion of the court.

Mr. E. S. Van Winkle for the appellant.

Mr. F. N. Bangs, contra.

MR. JUSTICE SWAYNE delivered the opinion of the court.

Prior to the 1st of December, 1865, a copartnership existed in the city of New York, under the name of J. K. & E. B. Place. They were dealers in groceries. The members of the firm were James K. Place, Ephraim B. Place, and James D. Sparkman. The latter was a special partner. Under the law of New York, such partners can put a limited sum at risk, and are liable for nothing beyond it. At the date mentioned, this copartnership was dissolved. E. B. Place retired, and a new firm was formed, under the name of J. K. Place & Co. The members were James D. Sparkman and James K. Place. By the terms of the agreement, Sparkman was to contribute capital to the amount of $200,000, and Place to the amount of $600,000, and the profits were to be apportioned accordingly. After making due allowance for the payment of all liabilities, the estimated value of Sparkman's interest in the assets of the old firm was $262,000, of James K. Place's $227,000, and of E. B. Place's $168,000. The latter sum E. B. Place had a right to draw out at any time, and he subsequently received the most of it. The debts of the old firm at the time of the creation of the new one, exclusive of the sum due E. B. Place, amounted to $3,850,000. Adding what was to be paid to him, they exceeded $4,000,000. A part of the assets of the old firm was merchandise on hand, valued in gold at $996,000. To this was added, to show its value in currency, forty-eight per cent, making an aggregate of $1,474,000. There was also cash on hand, con-

sisting of balances in the banks with which the firm dealt, to the amount of $137,000. The other assets were chiefly bills receivable and accounts in favor of the firm. J. K. Place & Co. put no new capital into their concern. They bought the merchandise of the former firm at $1,474,000, the amount at which it was estimated in currency. This was nearly $1,000,000 in excess of the aggregate of the sum to which they severally claimed to be entitled out of the assets of that firm. They remained at its place of business, used its books, and applied its means in all respects as if that firm still subsisted.

By a deed bearing date on the 30th of November, 1865, James D. Sparkman assigned the leasehold premises here in question to James K. Place. By a like deed, dated on the 1st of December following, Place assigned the same premises to Mary A. Sparkman, the wife of James D. Sparkman. Both these deeds were acknowledged on the 5th and recorded on the 9th of the month last mentioned. The premises were the family residence of Sparkman. At the time of this transaction he settled upon his wife also the horses, carriages, and furniture which formed a part of the establishment. He likewise directed his counsel to prepare the proper instrument for settling upon his wife $40,000 of seven per cent bonds of the United States, which he had received as his proportion of a larger amount of those securities belonging to the old firm. He afterwards claimed that this settlement had been made. In one of his answers to the bill in this case he said: "That being about to embark as a general partner in the said firm of James K. Place & Co., and being well advanced in years, he was desirous of making, in favor of his wife, Mary A. Sparkman, since deceased, a settlement of a portion of his property; and on or about the first day of December, 1865, having paid in his proportion of the capital to be contributed by him to the firm of James K. Place & Co., he directed his counsel to take the proper steps to secure to his said wife, from his then existing remaining property, the sum of one hundred thousand dollars ($100,000), or thereabouts."

What was done touching the property mentioned was the intended realization of this plan. It is not questioned that the several items were worth the amount proposed to be settled.

Mary Ann Sparkman died on the 13th of October, 1866. By her will, which bore date on the 20th of July of that year, she gave the income of her estate to her husband, James D. Sparkman, for life, and after his death, the estate to his children. She had no children.

After her death, the leasehold premises were sold and conveyed by her executor to John Q. Preble. He paid $18,196.60 in cash, and gave his bond and mortgage for $40,000, being the balance of the purchase-money.

On the 27th of December, 1867, J. K. Place & Co. failed, and made an assignment to Burrit and Sheffield, for the benefit of their creditors. Subsequently, both the partners, Place and Sparkman, went into voluntary bankruptcy, and Sedgwick, the complainant, became their assignee under the bankrupt law. He filed this bill in the District Court to reach the $40,000 of government bonds and the proceeds of the leasehold premises, and to subject them to his administration. That court decreed in his favor with respect to the bonds, but dismissed the bill as to the real estate. He thereupon appealed to the Circuit Court. There the decree of the District Court was affirmed as to the bonds and reversed as to the realty. The court decreed, among other things, that the bond and mortgage of Preble should be delivered to the complainant; that the amount due upon them should be paid to him; and that the executor of Mary Ann Sparkman should pay to the complainant, out of the assets of her estate, the sum of $28,804.89.

This amount was made up of the cash payment received by James T. Sparkman, while executor, from Preble, with interest to the date of the decree, and interest paid to the executor by Preble on his bond and mortgage, with interest upon that also to the same period.

The executor thereupon removed the case to this court by appeal.

The appeal was limited to the leasehold premises and the money decree against the executor. None was taken with respect to the bonds of the United States. That subject is not therefore involved in the controversy as it is now before us.

Two questions are presented for our determination: —

1. Was the settlement of the leasehold property valid?

2. If not, was the money decree against the executor properly rendered?

On the first point we entertain no doubt. The debts of the old firm, as we have shown, were $3,852,000. The assets, as they appeared on the books, were $4,509,000. The debts were a sum certain, which grew constantly and largely by the accumulation of interest. How much less than their face the assets were worth does not appear. They were liable to constant depreciation from the failure and insolvency of those from whom they were due. A sudden fall of prices would have produced the same effect as to the merchandise. The cash on hand was less than three per cent of the amount of the liabilities to be paid. The assets of every kind, good and bad, exceeded the amount of the liabilities to be paid by only two-ninths. He would have been a bold, if not a rash man, who would have agreed to take all the assets and pay all the debts. No responsible person, we apprehend, would have entered into such a stipulation without a large premium in addition to the assets. The new company was embarrassed from the beginning, and failed within a few days over two years from the time it was formed. It was found to be hopelessly insolvent. Its liabilities exceeded its means by at least $600,000.

With these facts before us, we cannot hesitate to hold that Sparkman was in no condition to settle any thing on his wife when the new partnership was formed.

The turning-point in this class of cases is always whether there was fraud in fact. The result depends upon the solution of that question. When one engaged or about to engage in any business has the means to meet its usual exigencies, and devotes such means in good faith to the business, and has besides other means which he chooses to settle upon any object of his bounty, unlooked-for disasters on his part, subsequently occurring, will not affect the validity of the settlement, because they afford no ground for the imputation of unfairness. But where there are heavy subsisting liabilities, doubtful solvency, a large settlement made upon the wife at the outset of the business, and failure and insolvency to a large amount shortly follow, it is impossible to avoid the conviction that there was a deliberate plan to provide for the settler and his family in

any event, and to throw the burden of the losses that might occur upon his creditors. The intention animating such conduct is condemned alike by ethics and the law. We think the case before us falls within this category, and we are entirely satisfied with the judgment of the Circuit Court upon the subject.

But different considerations apply to the fund for which the money part in the decree was rendered. The moneys were received by the executor for property sold by him after the death of the testatrix. It was lent by him to the firm of Place, King, & Place, and was lost to the estate by their failure. There is no proof that the testatrix took any part in bringing about the settlement, or that there was any guilty knowledge on her part in the transaction. It is fairly to be presumed that she confided in the good faith of her husband, and simply yielded obedience to his wishes. The provision of her will attests her devotion to him. The fund did not exist in her lifetime, and her estate has been in no wise benefited by it. The transfer of the property was his act, not hers. She was only a passive recipient. Her will — doubtless influenced, if not controlled by him — gave him her entire estate for life, and, after his death, gave it to his family. No provision was made for her family.

The sphere of the avocations and duties of husband and wife are different. Usually she knows little of business and property interests. It is natural that she should confide in his integrity, and be guided in every thing by his kindly judgment. She is always *sub potestate viri*. Hence, the disabilities and safeguards which the law wisely throws around her.

Chancellor Kent says: "The husband is liable for the torts and frauds of the wife committed during coverture. If committed in his company or by his order, he alone is liable." 2 Com. 149. "And if a wife act in company with her husband in the commission of a felony, other than treason or homicide, it is conclusively presumed that she acted under his coercion, and is consequently without any guilty intent." 1 Greenl. Evid., sect. 28. See also *Liverpool Adelphi Loan Association* v. *Fairhirst*, 9 Exch. Rep. 422, and *Gordon* v. *Haywood*, 2 N. H. 402.

A *feme covert* may be a trustee, but her husband is personally liable for any breach of trust she may commit, and hence she cannot act in the administration of the trust without his concurrence or consent. Hill, Trustees, 464; *Phillips* v. *Richardson*, 4 J. J. Marsh. (Ky.) 212. She is not liable upon the covenants of title in a deed executed by herself and her husband. Schouler, Dom. Rel. 155. Upon the subject of her disabilities, see *Norton* v. *Meader*, 4 Sawyer, 603.

This part of the decree was clearly erroneous, and the error must be corrected.

The cases of *Phipps* v. *Sedgwick* and of *Place* v. *Sedgwick* (95 U. S. 8) were branches of this litigation. They presented the same questions of fact and law which we have considered in this case. Those questions were disposed of as we have now determined them. The fulness with which the views of the court, speaking through Mr. Justice Miller, were expressed, renders it unnecessary to add any thing to what has been already said, on the present occasion.

This case will be remanded to the Circuit Court, with directions to modify the decree in conformity to this opinion; and it is

So ordered.

THE "VIRGINIA EHRMAN" AND THE "AGNESE."

A ship in tow of a steam-tug, each having its own master and crew, collided with and sunk a steam-dredge lying at anchor at a proper place, displaying good signal-lights, and having competent lookouts stationed on her decks. The tug and the ship having been libelled and seized, the former gave a stipulation for value for $16,000. Both were found to be at fault; and the court below entered a decree awarding the libellants $24,184.57 damages, with interest and costs, and directing that one half of the amount be paid by the ship, and the remaining half by the stipulators for the tug. *Held*, that the decree should be modified so as to further provide that any balance of the moiety decreed against either vessel, which the libellants shall be unable to collect, shall be paid by the other, or by her stipulators, to the extent of her stipulated value beyond the moiety due from her.

APPEALS from the Circuit Court of the United States for the District of Maryland.

The facts are stated in the opinion of the court.

Mr. I. Nevett Steele and *Mr. A. A. Strout* for the libellants.

Mr. S. Teakle Wallis for the "Virginia Ehrman," and *Mr. Charles Marshall* for the "Agnese."

MR. JUSTICE CLIFFORD delivered the opinion of the court.

Ship-owners, if their ship is without fault, are entitled in a cause of collision, except where it occurs from inevitable accident, to full compensation for the damage their ship receives, provided it does not exceed the value of the offending vessel and her freight then pending; and the same rule applies where the injury is caused by the joint action of a tug and tow, if it be so alleged in the libel, and it appears that both were in charge of their own master and crew, and that each was in fault in not taking due care, or was guilty of negligence or of unskilful or improper navigation.

Litigations of the kind depend very much upon the facts and circumstances that attended the disaster, which it is often difficult to ascertain with sufficient certainty, on account of the conflict in the statements of the witnesses; nor is the present case by any means free of that embarrassment, which is somewhat intensified by the triplicate character of the controversy. Damages are claimed both of the steam-tug and her tow by the libellants, who are the owners of the steam-dredge which it is alleged and admitted was sunk by the collision and became a total loss.

Prior to the collision, the dredge was employed under a contract with the United States in deepening and widening what is known as the Craigill channel, one of the approaches to the port of Baltimore; and it is alleged that she was lying on the night in question at her proper berth on the western edge of the improved channel, carefully and skilfully anchored, with three anchors properly set to keep her in position to prosecute her work, and with two signal-lights brightly burning. While the dredge was so lying at anchor, the charge of the libel is that the ship, being in tow of the steam-tug, by the neglect and want of care and skill on the part of the masters and crews of both those vessels, ran into and sunk the anchored dredge in the channel where she was lying.

Both the steam-tug and the ship admit the collision, and that

the dredge was sunk and lost; and the libellants allege that the ship was unskilfully navigated, and that the steam-tug was in fault in sailing with her tow dangerously near to the dredge, notwithstanding there was plenty of deep water on either side of the dredge, into which she might have taken the ship without danger.

Service was made, and the owners of the respective vessels appeared and filed separate answers. Separate answers became necessary, because the owners of the steam-tug differed widely in the defence of their vessel from that set up by the owners of the ship which the steam-tug had in tow.

For the ship the defence is, that she was being towed by the steam-tug up the bay to the port of Baltimore; that she was attached to the steam-tug by a hawser fifty fathoms long, running from the bow of the ship to the stern of the steam-tug; that the master and crew of the ship were entirely ignorant of the channel leading to the port, and that they assumed no control or direction over the ship; that the ship followed closely in the wake of the steam-tug as she sailed up the bay; that as they proceeded in that direction those in charge of the ship perceived that they were passing in close proximity to a dredging-machine heading to the south, similar to that described in the libel; that just as they passed that object they perceived at a distance in the rear of the same a second dredging-machine about midway the channel, but a little nearer to the western edge of the same than the one they had just passed; and the answer for the ship alleges that the steam-tug would have run directly into the second dredge had she not starboarded her helm just in time to prevent a collision, but not in season to enable the ship to adopt the necessary corresponding precaution.

Two causes for the disaster are assigned in the answer filed by the owners of the steam-tug: 1. That the dredging-machines were improperly anchored in the middle of the channel, and on the line of the lights intended for the guidance of ships when using the channel and under way, and that the dredges should have been located nearer to the edge of the channel, which, as they allege, is only about three hundred feet wide. 2. That the collision was caused by the gross mismanagement of the ship,

and by the drunkenness, incompetency, and negligence of the pilot in charge of her navigation; and they also allege that the ship had a fair and free wind, with her topsails drawing and under full headway, and that she was not dependent upon the steam-tug either for her motion or her course.

Testimony was taken on both sides; and both parties having been fully heard, the District Court dismissed the libel as to the steam-tug, entered a decretal order in favor of the libellants as against the ship, and sent the cause to a commissioner to ascertain and report the amount of the damages.

Due report was made by the commissioner that the libellants are entitled to recover as damages the sum of $24,184.57. Exceptions to the report were filed by the claimants of the ship, which were subsequently overruled by the District Court, and a final decree entered in favor of the libellants for the amount reported by the commissioner.

Prompt appeal was taken by the owners of the ship and by the libellants to the Circuit Court, where the parties were again heard; and the Circuit Court being of the opinion that both the steam-tug and the tow were in fault, reversed the decree of the District Court dismissing the libel as to the steam-tug, and entered a decree in favor of the libellants against both of the respondent vessels for the amount of the damages allowed by the District Court, and adjudged and decreed that the same, together with the interest and cost, be equally divided between the ship and the steam-tug; and from that decree all the parties appealed to this court.

Conflicting theories are still maintained by the respective appellants.

1. Throughout, the owners of the steam-dredge have contended that both the steam-tug and the ship were in fault, and they still insist that the decree of the Circuit Court is correct, except that it fails to make provision that if either of the parties adjudged to be in fault is unable to pay the whole amount of the moiety decreed against such party, that the libellants may collect the balance of such moiety of the other respondent party.

2. On the part of the steam-tug the proposition is still maintained, that the steam-dredge was anchored in a wrong place,

and that the collision was caused by the gross mismanagement of the ship, arising from the drunkenness, negligence, and incompetency of her pilot.

8. Opposed to that, it is contended by the appellants in behalf of the ship, as follows: 1. That the steam-dredge is responsible for the accident, by reason of the place and manner of her anchorage. 2. That in any view, if the ship is held liable at all, the decree of the Circuit Court dividing the damages between her and the steam-tug should be affirmed.

Cases arise undoubtedly where both the tug and the tow are liable for the consequences of a collision, as when those in charge of the respective vessels jointly participate in their control and management, and the master or crew of both vessels are either deficient in skill, omit to take due care, or are guilty of negligence in their navigation. *Sturgis* v. *Boyer et al.*, 24 How. 110; *The Mabey and Cooper*, 14 Wall. 204.

Official directions as to the position of the steam-dredges employed in making the excavation were given by the engineer to the superintendent, and it appears that the superintendent carried the directions into effect. They were placed in their positions pursuant to those directions; and it appears that the orders given required that they should remain in that position during the night, in order that the work could be resumed in the morning, without inconvenience or delay.

Three steam-dredges were employed by the libellants in making the excavation under their contract with the principal official engineer. By their contract they were to prosecute the work under the directions of the engineer-in-charge, and it appears that he, the afternoon before the collision occurred in the evening, directed the dredges to be placed in the respective positions where they were when the steam-tug, with her tow, attempted to sail up the channel, which is straight, and runs nearly north and south. They were employed in deepening the channel in the bay, below the mouth of the Patapsco River, as before remarked, under a contract with the United States. Being employed in the same work, they were located as follows; to wit, the first between two and three miles above the mouth or southern end of the channel; the second, which is the one that was sunk and lost, was located about a quarter of a mile

further north; and the third and last, about a mile and a quarter north of the second. Buoys were set on the eastern edge of the channel, as guides for mariners by night, and the steam-dredges were anchored on the western edge of the excavated channel, leaving about two hundred feet of excavated channel between the steam-dredge lost in the collision and the buoys located on the eastern edge of the same.

Evidence of the most satisfactory character was given that the steam-dredges were properly moored, and it shows that each was held in position by three anchors having two quarter-lines, one from each side, running towards the front six hundred feet, at an angle as claimed of about forty-five degrees, and a stern line running out about four hundred feet, which it is not denied were sufficient to hold the dredges firmly in position. Though securely moored, it appears that the steam-dredges were not exactly in line with each other, the second, which is the one lost in the collision, having been located half her width further to the west than the first, which was anchored a quarter of a mile lower down in the channel.

Enough appears to show that the contract of the libellants for deepening the channel was completed for the whole length between the steam-dredges and the buoys, and that the dredges were located with a view to prosecute the work of excavation on the west side of the centre line of the work for the same width, or, in other words, the channel was to be deepened to the width of four hundred feet, — two hundred feet on each side of the centre line, the eastern half of which only was completed; from which it follows that the water in the channel east of the steam-dredges was four feet deeper than the water in the channel west of the dredges, which had only the natural depth of water. Either channel had sufficient depth of water for the steam-tug and the ship, as the testimony clearly shows that the water west of the dredges was eighteen or twenty feet deep, and that the ship did not draw more than fourteen feet.

Examined in the light of these suggestions, as the case should be, it is clear that the proposition that the steam-dredge was anchored in an improper place utterly fails, as the proofs are clear that the steam-tug with the ship in tow had plenty of sea-room to pass up either side of the anchored dredges. Such

being the case, it follows that the steam-dredge was without fault, as the proofs show that she displayed good signal-lights, and that she had competent lookouts properly stationed on her deck. Securely anchored as she was on the western edge of the excavated channel, there was an unobstructed passage of water east of her about two hundred feet in width and twenty-four feet deep, and with a passage west of her of equal width, where the water was eighteen or twenty feet in depth.

Vessels in motion are required to keep out of the way of a vessel at anchor, if the latter is without fault, unless it appears that the collision was the result of inevitable accident; the rule being that the vessel in motion must exonerate herself from blame, by showing that it was not in her power to prevent the collision by adopting any practicable precautions. *The Batavia*, 40 Eng. L. & Eq. 25; *The Lochlibo*, 8 W. Rob. 310; *Strout* v. *Foster*, 1 How. 94; *Ure* v. *Coffman et al.*, 19 id. 56; *The Granite State*, 3 Wall. 314; *The Bridgeport*, 14 id. 119; *The John Adams*, 1 Cliff. 418.

Concede that, and it follows that the ship was clearly in fault, as the proofs show to a demonstration that if she had starboarded her helm after she passed the first steam-dredge the collision would not have occurred, and they furnish no excuse for the omission. Instead of that, the better opinion is that the ship had no lookout, and that her helm was put to port at the very moment when it should have been put to starboard. Explanations to show how the mistake happened are unnecessary, as the ship is equally in fault whether it was because the pilot was intoxicated or because the ship was without a lookout. Suffice it to say the mistake occurred, and the evidence shows that the ship is without just excuse, as the night was light and the sea was smooth. Collisions under such circumstances find no excuse where there is a good wind and a berth of sufficient width, as nothing short of bad seamanship in such a case could bring the two vessels together.

Nothing of much importance remains to be considered except the question whether the steam-tug was also in fault.

Negligence, it is alleged, was the cause of the collision; and the libellants charge that those in charge of the steam-tug were guilty of want of skill and care, as well as those in charge

of the ship, and that both the steam-tug and the ship are responsible to the owners of the steam-dredge for the damages which the collision occasioned.

Gross negligence, it is insisted, is imputable to the master of the steam-tug in attempting to tow a ship two hundred and eighteen feet long up that channel in the night on either side of the steam-dredges, especially without more knowledge of the same than was possessed by the master of the steam-tug, according to his own testimony. His knowledge of the channel appears to have been very imperfect; but he knew that the steam-dredges were there, as he admits that he saw them there when he came down from the port the same afternoon. He took the ship in tow off Annapolis, and at the time he entered into the engagement he said he would take her up the excavated channel; but when the steam-tug and tow reached the first steam-dredge, he took them the west side of the dredge, which both the tug and tow passed in safety, though not more than thirty-five or forty feet west of the starboard side, as she was lying heading south.

As before explained, the second steam-dredge was moored half her width or more further to the west than the first, so that in order to pass her in safety it was necessary that both the steam-tug and the tow should incline to port; and it appears that the steam-tug did so, and that she passed the steam-dredge without collision, but that the ship, either because she neglected that precaution or because she ported her helm, ran into the steam-dredge, striking her end on, eight or ten feet from her starboard side, with such violence that she broke and cut into the heavy timbers of the dredge for the distance of six feet, causing her to sink in the channel.

Without doubt, it was practicable for the steam-tug, with due care and good seamanship on the part of those in charge both of the steam-tug and the tow, to take the tow up to the port on either side of the steam-dredges; but we all concur with the circuit judge that it was a rash act and bad seamanship to attempt to do so in such close proximity to the anchored steam-dredge, when there was plenty of room to have given the same a wider berth.

Attempt is made to excuse the master for having selected

the western side of the steam-dredges for his passage, upon the ground that he was influenced by a signal from the first dredge; but the evidence introduced for the purpose fails to satisfy the court that any such signal was given; nor would it afford any satisfactory excuse for the steam-tug even if it appeared that the fact was so, as it was still the duty of the steam-tug to have given a wider berth to the anchored steam-dredges. Such an experiment was wholly inexcusable, as there was plenty of sea-room still further to the west to have enabled the tug and tow to have passed up the channel without danger of collision with the anchored steam-dredges.

Certain exceptions were taken to the commissioner's report in the District Court, but inasmuch as they were not pressed in the Circuit Court nor assigned for error here, they are overruled.

Innocent parties in a case of collision are entitled to full compensation for the injuries received by their vessel, unless it occurred by inevitable accident, provided the amount does not exceed the amount or value of the interest of the other party in the colliding ship and her freight then pending. 9 Stat. 635; *The Atlas*, 93 U. S. 302; *The Alabama and the Game-cock*, 92 id. 695; *The Washington and the Gregory*, 9 Wall. 513.

Where the charge in such a case is joint, it is correct to divide the damages; but still the injured party, if without fault, is entitled to full compensation, and it follows that if either of the faulty parties is unable to pay the whole of his moiety, it is, in general, the right of the injured party to collect the balance of the other faulty party. No such provision is contained in the decree of the Circuit Court, probably for the reason that the stipulation for value given in behalf of the steam-tug greatly exceeds the amount of a moiety of the damages and costs awarded to the libellants. But such a stipulation is merely a substitute for the vessel, and in view of all the circumstances it is deemed proper that the decree shall conform to the settled practice.

Tested by these suggestions, it follows that the decree of the Circuit Court must be modified in that particular.

Decree, as modified, affirmed.

HURLEY v. JONES.

1. When a cause, reached in its regular order upon the docket, has, under Rule 16, been dismissed by reason of the appellant's non-appearance, for which no just cause existed, it will not, over the objection of the appellee, be reinstated.
2. In view of the crowded state of the docket, the court announces its determination to enforce rigidly the rule requiring causes to be ready for hearing when they are reached.

MOTION to reinstate a cause dismissed under the sixteenth rule.

Mr. Fillmore Beall in support of the motion.
Mr. W. F. Sapp, contra.

MR. CHIEF JUSTICE WAITE delivered the opinion of the court.

When this cause was reached in its order upon the docket, there being no appearance by the appellant, the appellee had him called and the appeal dismissed under Rule 16. Our rules require that, "upon the filing of the transcript of a record brought up by writ of error or appeal, the appearance of counsel for the plaintiff in error or appellant shall be entered." Rule 9, par. 3. This rule was adopted for the purpose of making some attorney of the court responsible for the due prosecution of the suit, and it was intended for something more than mere form. Parties should understand that they are represented here by their counsel, and that notice to counsel is ordinarily equivalent to notice to themselves.

This cause was docketed here nearly two years and a half before it was called. The attorney of record seems to have done all he was expected to do. But the appellant himself was so unmindful of his interests, that he did not know the counsel, upon whom he relied for the presentation of his case, had died before the commencement of the present term, and had been unable to attend to business on account of impaired health for a long time before his death. In the crowded state of our docket, filled with cases from all parts of the United States, it is our duty to take special care that the necessary delays in

disposing of the business are not added to by the neglect of counsel or parties. For this reason, our rules requiring causes to be ready for hearing when reached are, and will continue to be, rigidly enforced.

Motion denied.

HERBERT v. BUTLER.

1. A paper incorporated in the record, and certified to be a part thereof by the court below, if it has all the requisites of a bill of exceptions, will be considered here as such, although it be otherwise entitled.
2. Where the burden of proof is on the plaintiff, and the evidence submitted to sustain the issue is such that a verdict in his favor would be set aside, the court is not bound to submit the case to the jury, but may direct them to find a verdict for the defendant.

ERROR to the Circuit Court of the United States for the Eastern District of New York.

This was an action brought by Herbert for money had and received for his use by Butler. Plea, general issue. The parties were the only witnesses in the case. Judgment for the defendant. Herbert sued out this writ of error.

The facts are stated in the opinion of the court.

Mr. Jasper K. Herbert for the plaintiff in error.

Mr. Thomas J. Durant, contra.

MR. JUSTICE BRADLEY delivered the opinion of the court.

There are two questions in this case: *first*, whether there is any bill of exceptions by which we are authorized to look into the proceedings at the trial; and, *secondly*, whether, if there is such a bill, there is any ground for reversing the judgment.

First, Is there a bill of exceptions? The document relied on by the plaintiff in error as constituting such a bill, and certified from the court below as part of the record, is appended to the record of the pleadings and judgment, and commences as follows: —

"The following case and exceptions is agreed on by the attorneys for Jasper K. Herbert, plaintiff, and Benjamin F. Butler, defendant." Then follow the title of the cause, a record

of the proceedings had, and the evidence given at the trial, including the rulings of the judge and the exceptions thereto; and the case thus presented closes with the judge's certificate, as follows: "Settled as within, pursuant to the above consent. Sept. 19, 1875. (Signed) Charles L. Benedict."

If this paper had been entitled a "bill of exceptions," instead of a "case and exceptions," there could not be any doubt that it would be a sufficient bill. It has all the requisites of a bill, except the mere name. A seal is not required, being expressly dispensed with by the act of 1872 (17 Stat. 197; Rev. Stat., sect. 953); and we had before decided that a seal is not essential in the courts of the United States. *Generes* v. *Campbell*, 11 Wall. 193. It has the sanction and signature of the judge, and, though settled after the trial, it was agreed upon by the parties; and hence it is free from objections which have prevailed in other cases. *Generes* v. *Bonnemer*, 7 id. 564; *Graham* v. *Bayne*, 18 How. 60. We think it is a sufficient bill of exceptions.

Secondly, Was any error committed in the ruling of the judge? The bill of exceptions shows that, after the evidence was concluded on both sides, the judge directed the jury to find a verdict for the defendant. To this direction the plaintiff excepted, and it is the only error assigned here. The evidence is all set out in the bill, and the question is, whether the judge erred in not submitting it to the jury.

We decided in *Improvement Company* v. *Munson* (14 Wall. 442) and *Pleasants* v. *Fant* (22 id. 116), that although there may be some evidence in favor of a party, yet if it is insufficient to sustain a verdict, so that one based thereon would be set aside, the court is not bound to submit the case to the jury, but may direct them what verdict to render. As the question is fully discussed in those cases, it is unnecessary to repeat the discussion here.

After carefully examining the evidence, we are of opinion that it justified the direction given.

The plaintiff testified, in substance, that G. B. Lamar, having obtained a judgment for $579,000 against the United States in the Court of Claims, and an appeal therefrom being pending in this court in October, 1873, Lamar employed him (the

plaintiff) to get the appeal dismissed, and agreed to give him $20,000 for doing so; that he (the plaintiff) thereupon employed the defendant to assist him, agreeing to divide his fee with him, to which the defendant consented; that thereupon the defendant proceeded and procured the dismissal of the appeal; that the plaintiff, not getting his fee, called on Lamar, who informed him that he had paid it to the defendant; that, on applying to the defendant, he admitted having received the money from Lamar, but denied that he had received any thing for the plaintiff.

The plaintiff further produced Lamar's check to the defendant's order for the sum of $25,000, dated April 16, 1874, and the defendant's receipt, dated April 17, 1874, in the following words: —

"Received, Washington, April 17, 1874, of Gazaway B. Lamar, twenty-five thousand dollars ($25,000), in full for retainer and services as counsel in the trial of his case against Albert G. Brown and others, in the Circuit Court of the United States for the First Circuit, at Boston, and also in the preparations of the bill of exceptions and entry of the same in the Supreme Court of the United States, and also for retainer and argument of motion to dismiss the case in the Supreme Court of the United States, appellant, against him, from the judgment of the Court of Claims, and services in preparing a motion for dismissing the appeal, this being in full of all services and demands due by said Lamar up to and including the date on which said appeal was dismissed.

"BENJ. F. BUTLER."

The defendant, in his testimony, admitted the fact that he was employed by Lamar, through the plaintiff, in the matter of dismissing the appeal; he also admitted the receipt of the $25,000, but stated that he received this money in settlement of his own services alone; that he had been engaged in various other professional matters for Lamar, both before and after the dismissal of the appeal, and that his fees for these services were all included in the amount; and that he never received any thing from Lamar for the plaintiff. In addition to this, he produced in evidence a letter from the plaintiff to himself, dated April 9, 1874, and his answer thereto, dated April 12, 1874, of which the following are copies: —

"LAW OFFICES OF HERBERT & WILBER,
"58 BROADWAY, NEW YORK, April 9, 1874.

"MY DEAR GEN.,—I am glad to see that Lamar's appeal is dismissed.

"He agreed with me to pay $20,000 to have it dismissed; this with me. I immediately went to Washington and employed you. When you asked me, 'What about fees?' I replied, 'You can have $5,000 or $10,000 if you like. I have an agreement with Lamar.' You said 'All right; on that assurance I will go to work;' and we started off for the Attorney-General's office.

"Subsequently you told Lamar that 'I (you) must command the ship, or you would not sail,' or words to that effect.

"Since that time I have left the matter with you.

"Now I want to have you understand in relation to this matter, as I stated to you before leaving Washington, that Lamar's agreement is for $20,000 to have the appeal dismissed. *I want you to collect the money and send me a check for any portion to which you may think me entitled.*

"I advised Lamar, when in Boston, to employ you and me in this case. The employment did not come until others had failed, which made it more difficult.

"Nevertheless, the agreement between L. and myself, before I would call on you in regard to it, was as I have stated.

"Lamar is in Washington, and I leave the balance to you.

"Yours truly, J. K. HERBERT.

"Hon. B. F. BUTLER,
"Washington, D. C."

"HOUSE OF REPRESENTATIVES,
"WASHINGTON, D. C., April 12, 1874.

"SIR,—I have no power or authority to collect money in the case of Mr. Lamar, *nor can I collect your fees.*

"Very truly yours, BENJ. F. BUTLER.

"J. K. HERBERT,
"58 Broadway, New York."

It was after this correspondence, and after the defendant had settled with Lamar, that the plaintiff (as testified by him) called on Lamar, and was informed by him that he had paid the defendant; and that the defendant, on being applied to, admitted the receipt of the money, but denied having received any thing for the plaintiff.

Now, it is evident from this outline of the evidence that upon the issue made by the pleadings, namely, whether the defendant received any money for the use of the plaintiff, there was no necessary conflict in their testimony. The plaintiff may think that the defendant ought to have collected his (the plaintiff's) fees, as well as his own. But he cannot deny that the defendant expressly refused to do so when applied to for that purpose; and he does not, for he cannot, deny that the defendant (as he says, and as his receipt shows) may, in fact, have settled his own fees alone. Lamar's declaration cannot affect the defendant, especially in view of the express language of the receipt taken by him. Therefore, as the burden of proof was on the plaintiff to sustain the issue, and as the whole evidence taken together does not sustain it on his part, but the only direct evidence on the subject — namely, the testimony of the defendant, and the receipt given by him to Lamar — is to the contrary, the judge properly directed the jury to find for the defendant.

The minor points in which there may have been a conflict in the testimony of the parties do not affect the main question.

Judgment affirmed.

THE "CITY OF HARTFORD" AND THE "UNIT."

1. A steamboat collided with and sunk a schooner towed by a tug. The owner of the schooner and the owner of her cargo severally libelled the steamboat and tug, both of which were found to be in fault. *Held*, that each libellant was entitled to a decree against each of the offending vessels for a moiety of his damages, and for interest and costs, with a proviso that if either of said vessels was unable to pay such moiety, then he should have a remedy over against the other vessel for any balance thereof which might remain unpaid.
2. *The Alabama and the Game-cock* (92 U. S. 695) and *The Virginia Ehrman and the Agnese* (*supra*, p. 309) reaffirmed.

APPEALS from the Circuit Court of the United States for the Southern District of New York.

Hudson S. Rideout and others, owners of the schooner "Abbie S. Oakes," and Charles Robinson, owner of her cargo,

filed their separate libels in the District Court for the Southern District of New York, against the steamboat "City of Hartford" and the steam-tug "Unit," to recover, the first $8,000, and the second $4,500, damages, occasioned by the sinking of the schooner in East River, New York, which was caused by a collision between the "City of Hartford" and her while she was in tow by the "Unit." In each of the cases the steamer and tug were claimed by their respective owners. In the first case, the claimant entered into a bond in the sum of $16,000, and a stipulation for costs for $250. In the second case, the bond was for $9,000, and the stipulation for costs for $250. The "Unit" having been appraised at $3,000, her owners entered into a stipulation for value in that sum and for $250 costs.

The court, on final hearing, entered a decree in the first case that the libellants recover from the "City of Hartford" the sum of $4,119.04 damages, with $56.29 interest and $234.19 costs; and dismissed the libel as to the "Unit," with costs against the libellants. In the second case, the court dismissed the libel as to the "Unit," and decreed that Robinson recover from the "City of Hartford" $3,407.79 damages, with $8.52 interest and $142.64 costs. The owners of the schooner thereupon appealed to the Circuit Court from so much of the decree as dismissed their libel against the "Unit," and awarded costs against them. The company appealed from the entire decree in each case. Robinson did not appeal. The Circuit Court, upon hearing, entered in the first case a final decree, reversing that of the District Court, which dismissed the libel as to the "Unit" and awarded costs to the claimants, and ordering and adjudging that the libellants recover of the "City of Hartford" the sum of $2,087.67, being one-half of the damages sustained by the collision, together with interest thereon and the costs of seizure, and one-half of the general costs, making in all $2,674.54; that they recover of the "Unit" $2,087.67, "being the other one-half of the damages," with interest, and the costs specially incurred by the proceedings against her, and one-half of the general costs, amounting in all to $2,787.54.

In the second case, the decree of the District Court was modified, and it was ordered and adjudged that Robinson recover against the "City of Hartford" the sum of $1,856.66, being

one half-part of the damages sustained by him by reason of the collision, including interest thereon to the date of the decree of the District Court, and the sum of $337.14 interest on said half-part to the date of the decree of the Circuit Court, and so much of his costs against said steamboat in the District Court as were incurred in the seizure, amounting to $102.90, with $18.60 interest thereon, together with one-half of the general costs of the Circuit Court, taxed at $14.35, amounting in all to $2,829.65.

From these decrees the Hartford and New York Steamboat Company, claimants of the steamboat, and Robinson, severally appealed to this court.

Mr. R. H. Huntley for the steamboat company.

Mr. Joseph H. Choate for the owners of the schooner, and *Mr. Henry J. Scudder* for Robinson.

MR. JUSTICE CLIFFORD delivered the opinion of the court.

Freedom from fault is a good defence in a cause of collision, even when the suit is promoted to recover compensation for injuries received by an unoffending party; but the innocent party, if the collision was occasioned by the fault of the other vessel or vessels, is always entitled to full compensation for the injuries received, unless the loss exceeds the amount of the interest which the owners have in the offending ship or ships and the freight pending at the time of the collision. 9 Stat. 635; *The Atlas*, 93 U. S. 302.

Sufficient appears to show that the schooner was on a voyage from Baltimore to Portsmouth, N. H., laden with a cargo of corn, and that she put into the port of New York, by reason of stress of weather; that while there those in charge of her navigation employed the steam-tug to tow her from her anchorage through the pass called Hell Gate, and that the steam-tug undertook to perform that service for a reasonable compensation; that the steam-tug accordingly took the schooner in tow and proceeded on the route; that while so proceeding, and when in East River, the two vessels came in sight of the steamer "City of Hartford," then coming down the river; and the charge of the libel is that the steamer and steam-tug were so negligently, carelessly, and unskilfully manœuvred and navigated

that the steamer collided with the schooner, and caused her to sink, and that she, with her cargo and property on board, became a total loss.

Bad seamanship and unskilful navigation are imputed both to the steamer and the steam-tug, and the claim is that they are both bound to make good the damage sustained by the libellants.

Process was issued, and both the steamer and the steam-tug were attached by the marshal. Interlocutory proceedings will be omitted, as they are not material to the questions involved in the assignment of errors, except to say that the respective claimants of the respondent steamers appeared and filed answers to the libel. Testimony was taken on both sides; and after hearing, the District Court ordered a decretal order against the steamer, in favor of the libellants, and dismissed the libel as to the steam-tug, holding that the steamer was wholly in fault.

Owners of the cargo in such a case may, if they see fit, join with the owners of the vessel in promoting the cause of collision, or they may sue separately, at their election. In this case they filed a separate libel, in which they charged that the collision was occasioned both by the steamer and the steam-tug, and that both were bound to make good their loss. Service was made, and the claimants of both respondent vessels appeared and filed answers. Proofs being taken, they went to hearing; and the District Court entered a decree as in the preceding libel, holding that the steamer was wholly in fault, and dismissed the libel as to the steam-tug. Separate references were made to the master, whose respective reports were subsequently confirmed by the court.

By the final decree, the libellants in the first case recovered $4,119.04, with taxed costs, and the libellant in the second case recovered $3,704.79, with interest and taxed costs; and all parties except the libellant in the second case appealed to the Circuit Court.

Hearing was again had; and the Circuit Court reversed the decree of the District Court in the first case, dismissing the libel as to the steam-tug, and adjudged and decreed that both the steamer and the steam-tug were in fault, and that the

damages and costs should be equally apportioned between the offending vessels.

Pursuant to that order, the decree against the steamer was for the sum of $2,080.67, for half the damages sustained by the libellants, including interest, with costs as therein taxed; and the charge against the steam-tug was for the same sum, with interest and costs, as in the case of the steamer. In the second case, also, the decree was in favor of the libellants, upon the ground that both the steamer and the steam-tug were in fault, as in the other case, where the libel was promoted by the owners of the schooner.

Due computation of the loss sustained by the owner of the cargo, who was the libellant in the second case, was made in the District Court, and the Circuit Court adopted that computation as correct. As there made, it amounted, with interest, to the sum of $3,713.13, besides costs as taxed; but the Circuit Court adjudged and decreed that the libellant recover of the steamer the sum of $1,856, being one-half of the damages sustained by the libellant, including interest to date of the decree in the District Court, and the sum of $337.14, "for interest on half-part" to the date of the decree, with costs and interest thereon, as more fully set forth in the decree.

Evidence of a decisive character appears in the record to show that the circuit judge concurred with the District Court that the steamer was in fault, and that her fault contributed to the collision which caused the loss sustained by the respective libellants, but that he was unable to concur that the steam-tug was without fault. Instead of that, he was of the opinion that those in charge of the navigation of the steam-tug saw the steamer as she was coming down the river, at such a distance as would have enabled the steam-tug to have made any necessary manœuvre to avoid the collision.

Beyond all question, he was of the opinion that both the respondent vessels were in fault, which, by all the authorities, presents a case where each should be adjudged liable for a moiety of the damages. By the decree the steamer is adjudged liable for half the damages; but the libellant, though admitted to be without fault, has no decree whatever for the other half, or for any more than half of the costs.

Appeal was taken to this court, by the claimants of the steamer, from the decree of the Circuit Court in each case. In the second case, the libellant, owner of the cargo, appealed from the decree therein rendered.

Argument to show that the decree of the Circuit Court in the first case is correct is scarcely necessary, as both courts concur that the steamer was in fault, and the owners of the steam-tug have not appealed.

Suggestion is sometimes made that this court will, as a matter of course, affirm the decree of the Circuit Court where the decree of the Circuit Court affirms the decree of the District Court; but the court has never adopted any such rule of practice.

Where the appeal involves a question of fact, the burden in such a case is on the appellant to show that the decree in the subordinate court is erroneous; but it is a mistake to suppose that this court will not re-examine the whole testimony in the case, as the express requirement of the act of Congress is that the Supreme Court shall hear and determine such appeals, and it is as much the duty of the court to reverse the decree from which the appeal is taken for error of fact, if clearly established, as for error of law. *The Baltimore*, 8 Wall. 377; *The Maria Martin*, 12 id. 31; *The Lady Pike*, 21 id. 1.

Neither the evidence exhibited in the record nor the suggestions of counsel contained in the brief filed by the appellants have had the effect to create any doubts in the mind of the court that the conclusion of the subordinate courts that the steamer was in fault is correct. Nor do we deem it necessary to repeat the reasons given by those courts in support of the decrees in that regard.

Other manœuvres to avoid a collision failing, it was the clear duty of the steamer to stop and reverse. Both vessels were in plain view of each other, in a water where there was plenty of sea-room, which of itself is sufficient to afford a strong presumption that both were in fault. Enough appears to justify the conclusion that if the steamer had stopped her engines the collision never would have occurred, and it is hardly less probable that it would have been avoided if she had put her helm hard-a-port; but it is not necessary to enter into speculations upon the subject, as it is highly probable, to say the least, that

the collision might have been avoided if either of the offending vessels had performed its duty.

Before examining the appeal and cross-appeal in the other case, it should be remarked that it is settled law that wrongful acts done by the co-operation and joint agency of two or more parties constitute them all wrong-doers, and that parties in a collision case, such as shippers and consignees, bear no part of the loss in such a disaster, and are entitled to full compensation for the damage which they suffer from the wrong-doers, except in the case where their loss exceeds the amount of the interest which the owners of the offending ship or ships have in them, and in the freight then pending.

Suppose the value of each vessel in such a case is equal, or more than equal, to a moiety of the damages, interest, and costs found due to the libellant, then it is clear that the decree should be for a moiety of the same against each of the offending vessels, with a provision that if either party is unable to pay his moiety of the damage, interest, and costs, the libellant shall have his remedy over against the other party. *The Atlas*, 93 U. S. 302; *The Alabama and the Game-cock*, 92 id. 695; *The Washington and the Gregory*, 9 Wall. 513; *The Virginia Ehrman and the Agnese*, *supra*, p. 309.

Apply that rule to the present case, and it is clear that the decree in the second case should be modified by inserting the provision, that if either party is unable to pay his moiety of the damage, interest, and costs, the libellant may have his remedy over against the other; and that a further decree be entered, that the libellant do recover against the steam-tug, her tackle, apparel, and furniture, the sum of $1,851.66, being one half-part of the damages sustained by the libellant by reason of the collision in the pleadings mentioned, including interest thereon to the date of the decree of the District Court, and the sum of $337.14 for the interest on said half-part to the date of the Circuit Court decree; and that the libellant do also recover of the steam-tug one-half of the costs of said libellant incurred in the District Court in the seizure of the steam-tug, with interest on the same to the date of the Circuit Court decree, together with one-half of the costs of the Circuit Court as there taxed; and that the steam-tug, her tackle, apparel, and furniture, be

condemned therefor, with the provision that if either of the offending vessels is unable to pay her moiety of the damage, interest, and costs, the libellant shall have a remedy over against the other offending vessel for any such balance, — from which it follows that the decree in the first case is correct, that the appeal of the owner of the cargo must be sustained for the purpose of modifying the decree in the second case, and for the purpose of making the addition thereto as specified in the opinion, and that the decree in that case as modified, and with the addition thereto specified, be affirmed; *The Dundee*, 2 Hagg. 137; *The Atlas*, 93 U. S. 302.

Owners of ships and vessels are not liable, under existing laws, for any loss, damage, or injury by collision, if occasioned without their privity or knowledge, beyond the amount of their interest in such ship or vessel and her freight pending at the time the collision occurred; but the decree in a proceeding *in rem* against the vessel is not a decree against the owner, nor will it render the owner liable in such a case for any greater amount than what the act of Congress limiting the liability of such owners allows. Such a decree in such a case is merely the ascertainment of the damage, interest, and costs which the libellant has sustained by the collision, and which he is entitled to recover, provided the interest of the owners in the colliding vessel or vessels is sufficient to pay it, and not otherwise.

Suffice it to say that the libellant in such a case and in such a proceeding is entitled to recover for the loss which he sustained by the collision, whether the offending vessel is or is not of a value sufficient to discharge the amount. Admiralty courts, where there are two offending vessels, may undoubtedly divide the damages between them; but the libellant in such a case is entitled to full compensation if the offending vessels are of sufficient value, and in that event the decree in each case should provide that the libellant is entitled, if either party is unable to pay his moiety of damage, to have his remedy over against the other offending vessel. *The Atlas*, *supra*.

The decree in the first case, and that in the second, as the same is modified and enlarged, by adding thereto a decree against the steam-tug for one-half part of the damage, interest, and costs sustained by the libellant, will be affirmed; and it is

So ordered.

INSURANCE COMPANY v. HARRIS.

Assumpsit against an insurance company upon a life policy. Plea, *non assumpsit*, with an agreement that either party might introduce any matter in evidence which would be legally admissible if it had been specially pleaded. Leave was subsequently granted the defendant to file a plea of *puis darrein continuance*. There was also an agreement which provided for the admission of the record of a suit in equity then pending in the Supreme Court of New York, whereto the parties hereto, and others claiming the benefit of the policy, were parties, and stipulated that any further proceedings therein might be filed as a part of the agreement at any time before the trial of this action. A decree was rendered by said court November 26, that the company pay the full amount of the policy to the credit of the suit, for the benefit of such of the other parties as should be found to be thereunto entitled, and that upon such payment the company be released and discharged from further liability on said policy, and that the several claimants be enjoined from suing thereon. The amount was thereupon forthwith paid into court. On the 25th of November the plaintiff stated his case, whereupon the hearing was postponed until the 29th of that month, when the defendant, no evidence having as yet been submitted, filed with the clerk of the court a duly certified transcript of said decree. On the trial, leave was refused the defendant to set up the matter of that suit and decree by way of plea, or put it in evidence, under the agreement. *Held*, that the decree was a final determination of the claim of the plaintiff below, and should have been admitted as matter of evidence, having the same force and effect in a court of the United States as in the courts of New York.

ERROR to the Circuit Court of the United States for the District of Maryland.

On the 9th of September, 1872, two actions were brought by the assignee of William H. Brune, against The Mutual Life Insurance Company of New York, on two policies issued by it in January of that year, in the name of said Brune, on the life of John S. Barry. Barry died in March, 1872. By consent, the actions were consolidated and tried together. The defendant pleaded the general issue; and the parties agreed that either of them might offer in evidence any matter that would be admissible if it had been specially pleaded, and leave was subsequently granted the defendant to file a plea of *puis darrein continuance*. There was also an agreement which provided for the admission of certain papers and records, and stipulated that any further proceedings in a then pending suit, commenced April 4, 1872, in the Supreme Court for the city and county of

New York, by Rosalie C. Barry, widow of said John, against said company, said Brune and his assignee, which either party should deem material, might be filed as a part of the agreement, at any time before the trial. The matter involved in that suit, and the decree which was rendered therein by the said court Nov. 26, 1873, are set out in the opinion of this court.

The issue was, by stipulation, submitted for trial to the court. On the 25th of November the plaintiff below stated his case; but, before any evidence was given, further action in the premises was postponed until the 29th of that month, when the defendant, before the plaintiff had submitted any evidence, filed with the clerk of the court a duly certified transcript of said decree.

On the trial, the defendant asked leave to set up the matter of that suit and decree by way of plea, or put it in evidence, under the agreement; but the court refused the leave, and the defendant excepted.

Judgment was rendered in favor of the plaintiff for the amount of the policies; and the defendant sued out this writ, and assigned for error that the court below erred: 1, in its refusal to grant the leave asked for; and, 2, in rendering judgment for the plaintiff upon the agreed statement of facts.

Whitridge, the original assignee, having died, Harris, the defendant in error, was substituted in his stead.

Mr. Edward Otis Hinkley and *Mr. Henry E. Davies* for the plaintiff in error.

Mr. J. Morrison Harris and *Mr. F. W. Brune, contra.*

MR. JUSTICE STRONG delivered the opinion of the court.

The first assignment of error is that the Circuit Court refused to allow the matter of the decree of interpleader in the New York case, which is mentioned at the end of the first bill of exceptions, to be set up in any manner, either by way of plea or in evidence. To understand this assignment, it is necessary to observe carefully what the New York case was. It was a bill filed on the 4th of April, 1872, in the Supreme Court of New York, wherein Rosalie C. Barry was complainant, and The Mutual Life Insurance Company, together with William H. Brune and Horatio L. Whitridge, were defendants.

The bill averred, in substance and effect, that two policies of insurance, one for $20,000 and the other for $5,000, on the life of John S. Barry, the complainant's husband, dated Jan. 18, 1872, issued by the insurance company to Brune, belonged in equity to her; that they were substitutes for or continuations of policies the company had previously issued to her, upon which she had paid the premiums for a number of years, and which, by the compulsion and misrepresentations of her husband, she had been induced to assign to Brune without any consideration; that afterwards Brune arranged to have the policies surrendered, and those of Jan. 18, 1872 (which are the same as those upon which the present suit has been brought), issued to him in lieu of the surrendered ones; that this arrangement was carried out; that the new policies were issued bearing the same numbers as those of the old, calling for the same premiums, insuring the same amounts; that no consideration was paid for them other than the surrender; that the premiums were paid as of the times when they were due on the surrendered policies; that such payment was made principally by the application on account thereof, without her knowledge or consent, of the cash value of the dividends to which she was entitled in virtue of the former policies issued to her, and with which she had been credited by the company. The bill also charged that Brune paid in money only the difference between such cash value of her dividends and the aggregate amount of the annual premiums, and that the cash was furnished to him, at his request, by the complainant's husband, on her account. The prayers of the bill were that the insurers should be enjoined against making any payment of such insurance to Brune or to Whitridge (who claimed some right as assignee of Brune), and that payment to her should be decreed. She also prayed that it might be adjudged she had not parted with or been divested of her rights under said policies, and that the defendants, Brune and Whitridge, might be decreed to have acquired no right or interest therein.

On the 27th of June next following, Brune filed an answer, and at the same time Whitridge also answered. In neither answer was there a denial of most of the averments of the bill. Brune denied that Mrs. Barry's assignments were involun-

tary, and claimed that the first policies were taken by him as collateral securities for loans which he had made to her husband; that if the assignments were improperly made, it was without his knowledge or belief; asserted that he had assigned the substituted policies to Whitridge, and insisted that the court should decree a dismissal of the complainant's bill, and should give judgment in favor of Whitridge's right to collect the sums due under the policies. The answer of Whitridge was similar in substance.

Subsequently the company put in an answer to Mrs. Barry's bill, accompanying it with a petition for an interpleader. The answer conceded the company's liability to pay the sums due upon the policies (those issued to Brune, and the same as those in suit in the present case); averred readiness to pay to the person or persons lawfully entitled to receive payment, and to whom payment could be made with safety; and offered to pay into court. The petition prayed that the company might be permitted thus to pay; that thereupon it might be discharged; and that Brune, Whitridge, and Mrs. Barry might be ordered to interplead.

The case in the Supreme Court of New York, therefore, though not strictly a bill of interpleader, was in effect that, and more. It was in the nature of such a bill, and was, under the practice of that State, a proper proceeding to determine the rights of the parties. *Badeau* v. *Rogers*, 2 Paige (N. Y.), 209. Brune and Whitridge, as well as Mrs. Barry and the company, were parties to it, and all of them appeared and pleaded. The court thus had complete jurisdiction alike of the insuring company, of Whitridge, Brune, and Mrs. Barry, the persons claiming as assured by the policies, and also of the subject, — the liability of the company to the claimants.

On the twenty-sixth day of November, 1873, a decree was entered in the case, which was a final determination of the rights of Whitridge, Brune, and Mrs. Barry, or either of them, as against the company. So far as it is necessary to refer to it, it was as follows: —

"It is further ordered that the defendants, The Mutual Life Insurance Company, within three days next hereafter, deposit the residue of said $25,000 with the United States Trust Com-

pany of New York, to the credit of this action, for the benefit of the plaintiff, or either of the other defendants herein who shall be found to be entitled thereto, and that said defendants, The Mutual Life Insurance Company, so depositing said amount with said trust company to the credit of this action, be dismissed from the further defence of this action, and thereupon be released, acquitted, and discharged from all claims or liabilities to the said Rosalie C. Barry, plaintiff, and William H. Brune and Horatio L. Whitridge, defendants herein, or any or either of them, for, upon, or by reason of the said sum of $25,000, or upon said policies of insurance, on the payment of said amount, less said adjusted costs as aforesaid, to the said The United States Trust Company of New York."

It was further ordered that the several claimants be enjoined from bringing any other action or proceedings against the defendant, The Mutual Life Insurance Company of New York, upon the said policies of insurance; and the claimants were also ordered to interplead upon the pleadings already interposed.

On the same day the insurance company paid to the United States Trust Company, to the credit of the action, as ordered, the amount of the policies.

It was this judgment of the New York Supreme Court which the plaintiffs in error offered to plead at the trial in the Circuit Court *puis darrein continuance*, and also offered to give in evidence, under an agreement between the parties, and, still further, independently of any agreement. But the court refused to allow it to be pleaded, or to be given in evidence; and this refusal is assigned as error.

The argument submitted to us has taken a very wide range. Much has been said which, in our opinion, has no bearing upon the exact question before us. It may be admitted that the pendency of an action between the same parties and for the same cause, in a foreign jurisdiction, is pleadable only in abatement. So it may be admitted that even a plea in bar, *puis darrein continuance*, cannot be received without verification. But the question here is, whether a final judgment determining the rights of the parties against each other, made by a court having jurisdiction both of the parties and of the subject of

controversy, was admissible, either as evidence under the general issue in assumpsit, or when specially pleaded, or in consequence of any agreement made. The decree made by the Supreme Court of New York, if admissible, was certainly material. It will not be denied that its effect was the creation of a complete bar against the recovery of any other judgment in that State on these policies of insurance, against the plaintiff in error. The claim of Brune or Whitridge became merged in the judgment of that court. It is perfectly immaterial whether the New York court first obtained jurisdiction of the subject and the parties, as in fact it did. When the final judgment was rendered it closed the controversy, and after that the person assured by the policies could not have maintained a suit on them in that State, in the same or any other court; and if not, he cannot now in any other State of the Union. This is settled by the act of Congress of May 26, 1790, which declares that the records and judicial proceedings of the courts of any State, when authenticated, shall have such faith and credit given them in every court within the United States as they have by law or usage in the courts of the State from whence they are taken. The meaning of this is, that when a judgment or decree has been given in one State by a court having jurisdiction of the parties and the subject, it has the same force and effect when pleaded or offered in evidence in the courts of any other State. *Mills* v. *Duryee*, 7 Cranch, 481; *Mayhew* v. *Thatcher*, 6 Wheat. 129; *Habich* v. *Folger*, 20 Wall. 1; *Burnley* v. *Stephenson*, 24 Ohio, 474; *Dobson* v. *Pearce*, 12 N. Y. 156.

If, then, the record of the decrees of the New York court was pertinent to the issue in the case in the Circuit Court, as we have seen it was, and was material, why should it not have been received? There was nothing in the pleadings, nor in the agreement of the parties, we think, that stood in the way of its admission. The defendant below, now plaintiff in error, had pleaded the general issue, and, under that in assumpsit, a judgment recovered may be given in evidence. 2 Stra. 733; 1 Saund. Williams's notes, 67 *a*; *Stafford* v. *Clark*, 2 Bing. 377; *Young* v. *Black*, 7 Cranch, 565. And if this were not the general rule, there was an agreement of the parties filed in the

case, by which it was stipulated that either party might offer in evidence, under the general issue, any matter admissible, as if specially pleaded. Of course, this agreement did not mean that an offer of evidence might be made that could have no legitimate bearing upon a proper decision of the case, and that such evidence should be received. But it did mean that whatever would be admissible under any plea should, if offered, be received under the plea of *non assumpsit*.

This, however, was not all. The parties entered into another agreement, that the two causes (viz. suits on the two policies) should be consolidated; that a special plea before filed by the defendant should be waived; that either party should have leave to offer in evidence any matter admissible, as if specially pleaded; and that certain facts, papers, and records were admitted and agreed to, for the purpose of taking the court's opinion in the case as to the plaintiff's right to maintain the action. Among the papers and records was the record of the case in the Supreme Court of New York, including the original petition of Mrs. Barry, and subsequent proceedings, together with the answer of the company and the petition for an interpleader. This agreement was made on the 18th of November, 1873, before the decree discharging the defendants was entered in the New York court. But the tenth clause provided for the use of any subsequent action in that case. It was as follows:—

"10th. And the said case, wherein Rosalie C. Barry is plaintiff, and The Mutual Life Insurance Company of New York and William H. Brune and Horatio L. Whitridge are defendants, is still pending in New York, and if there should be any further proceedings therein which either party may think material, they may be filed as part of this agreement at any time before the trial of this case."

The decree of the New York court was a further proceeding in that case, and by the agreement it was stipulated that it might be filed and submitted to the court as an agreed fact in the case. It is true the agreement allowed filing at any time before the trial, and the case was called for trial on the 25th of November, 1873. On that day, after the plaintiff had stated his case, but before any evidence was read, the further hearing was postponed until November 29; and on the 29th, before any

evidence was read, the copy of the final order and decree made on the 26th of November by the Supreme Court of New York was filed with the clerk of the Circuit Court. It is now contended that it was filed too late. We do not think so, though the learned judge of the Circuit Court said he would consider the trial as having begun on the 25th. Technically, it may be the trial commenced on that day, but it advanced then only to an oral statement of what was submitted for trial. All the evidence was given after the record was filed. The substantial trial was afterwards. The agreement between the parties should not have been construed technically, but rather in accordance with its spirit and in furtherance of justice.

And if the filing, when it was filed, of the final decree of the New York court as a part of the agreed facts was not allowed by the tenth clause of the agreement of November 18, the decree was still admissible in evidence. That agreement stipulated that either party might offer in evidence any matter admissible as if specially pleaded. It did not require the court to enter judgment upon the admitted facts alone.

It is argued by the defendant in error that the decree rejected by the court was not filed, and that the offer of the plaintiff in error was only to show a *lis pendens*. It is true the record did not show that the interpleading between Mrs. Barry and Brune and Whitridge had terminated. But the decree was a final determination of the claim of all and each of them against the defendant in the present case, upon the policies now in suit. The claim against the company is no longer open to litigation.

Upon the whole, therefore, we conclude that the first assignment of error must be sustained, and what we have said renders it unnecessary to remark upon the second.

The judgment of the Circuit Court must be reversed, and the record remitted for a new trial; and it is

So ordered.

EMIGRANT COMPANY *v.* COUNTY OF WRIGHT.

The legislature of Iowa having, by an act passed Feb. 2, 1853, granted to the counties in which the same were respectively situated the swamp and overflowed lands to which the State was entitled under the act of Congress of Sept. 28, 1850 (9 Stat. 519), the county of Wright presented its claim to the Department of the Interior. Having been informed by A., its agent, that the same had been rejected, and that, under the ruling adopted, but little hope remained of its final allowance, the county, July 9, 1862, through its board of supervisors, entered into a contract with the American Emigrant Company to convey to it "all the swamp and overflowed lands of said county, and all the proceeds thereof, and claim for the same on the United States and all other parties," the company agreeing, in payment therefor, to spend $500 in such public improvements in the county as the board should require, to take the lands subject to the provisions of the said act of Congress and the existing laws of Iowa, and to release the State and the county from any liability to reclaim the lands. The contract was submitted to the vote of the county, and eighty-nine out of the ninety votes which were cast were in favor of affirming it. Neither the supervisors nor the voters knew the nature or the value of what they were selling. The company was informed in regard to both, and it withheld the information from the county officers. Subsequently, A., who had become the agent of the company, and was then acting in its interest, procured the reversal of the former ruling of the department, presented the renewed claim of the county, and secured an allowance of several hundred acres of unsold lands in place, $981 in money, and scrip for about six thousand acres in lieu of swamp lands which had been sold by the United States. Jan. 7, 1867, the county, in fulfilment of the contract, conveyed to the company, by deed, a large quantity of lands. The county, in 1870, no improvements having been made, filed this bill, praying for the annulment and cancellation of the contract, for a reconveyance of the lands, saving the rights of intermediate purchasers, and for an accounting, so far as the company had sold said lands, or received money on account of swamp lands due the county. *Held*, 1. That the fact that all the parties knew that they were dealing with a trust-fund devoted by the donor to a specific purpose demanded the utmost good faith on the part of the company. 2. That, in view of the provision for the diversion of the fund, the gross inadequacy of the compensation, and the successful speculation at the expense of the rights of the public, the county is entitled to the relief prayed.

APPEAL from the Circuit Court of the United States for the District of Iowa.

The facts are stated in the opinion of the court.

Mr. J. A. Harvey and *Mr. C. C. Nourse* for the appellant.

Mr. D. D. Chase, contra.

MR. JUSTICE MILLER delivered the opinion of the court.

On the 28th of September, 1850, Congress passed an act

(9 Stat. 519) granting all the swamp and overflowed lands, made unfit thereby for cultivation, to the States in which they were situated. This grant was made to enable the states to reclaim those lands; and a proviso to the second section declares "that the proceeds of said lands, whether from sale or by direct appropriation in kind, shall be applied exclusively, as far as necessary, to the purpose of reclaiming said lands by means of the levees and drains aforesaid." The Secretary of the Interior was required to make out accurate lists and plats of the lands described as aforesaid, and transmit the same to the governors of the States; and at the request of the governors to cause patents to be issued, which should vest the fee-simple to said lands in the States, subject to the disposal of their respective legislatures.

For some reason, not necessary to be inquired into now, but which has been the source of much controversy between the States and the Department of the Interior, and also of much litigation between parties claiming under the grant and those claiming adversely to it, the Secretary failed to make any such selections and lists of swamp lands as the act contemplated, except as he was induced to make partial and imperfect lists at the suggestion of persons acting for the States on various occasions.

The State of Iowa, by the act of Feb. 2, 1853, granted these lands to the counties of that State in which they might be found, with an injunction that the lands and their proceeds should be appropriated to reclaiming the swamp lands; and if, when this was accomplished, any thing was left, to building roads and bridges over the same; and, lastly, the remainder to be used in building roads and bridges in other parts of the county.

By subsequent legislation of the State the counties were authorized to depart from this injunction, and to use the lands for public buildings and internal improvements; but the assent of the majority of the voters of the county to such purpose was required. It also authorized the sale of all said lands to any person or corporation by a written contract, to be in like manner submitted to the vote of the county; but such sale was subject to the following proviso: "That no sale, contract, or

other disposition of said swamp or overflowed lands shall be valid, unless the person or company to whom the same are sold, contracted, or otherwise disposed of, shall take the same, subject to all the provisions of the act of Congress of Sept. 28, 1850, and shall expressly release the State of Iowa and the county in which the lands are situate from all liability for reclaiming said lands."

On the ninth day of July, 1862, a written contract for the sale of the swamp lands of Wright County, and all interest therein, and of the claim of the county for indemnity against the United States for swamp lands which had been sold by the government, was signed by the supervisors of the county of Wright and the American Emigrant Company, by their agent, H. C. Crawford, and attested by the clerk and seal of Wright County. This contract was submitted to the vote of the county, and affirmed by a majority. It appears that ninety votes were cast, and all of them but one were for affirming the contract. On the seventh day of January, 1867, the county, in fulfilment of the contract, made a deed of conveyance of a large list of lands to that company.

The case before us is a bill in chancery to set aside said contract and deed, and for an accounting, so far as the company has sold lands or received money on account of swamp lands due to said county. On final hearing, the court made a decree to that effect.

The American Emigrant Company claims to be organized as a corporation under the laws of the State of Connecticut, and its professed object is to aid the immigration of foreigners to this country, by settling them on farm lands in the West. It does not appear that during the fifteen or twenty years that it has been in existence it has done much, if any thing, in the way of promoting immigration. But it does appear that in the State of Iowa it has done a very large business in purchasing from the counties their contested claims for swamp lands, under the act of Congress and the statutes of the State to which we have referred.

How far this company was instrumental in procuring the legislation authorizing the counties to sell out these unascertained interests in the swamp-land grant, and to connive at a

diversion of the lands from the purposes of the grant, we are not informed.

Some of the peculiar provisions of the act of 1858, passed about the time this company was organized, by which the counties were authorized to sell these lands, and claims for land, to corporations, and to take from the purchaser an obligation to hold the State and county harmless for any diversion of the grant from its original purpose, when taken in connection with the policy of the company as revealed in the depositions of its officers, leave strong ground of suspicion that those who alone have profited by the statute had something to do with its enactment.

The present bill is based upon three principal propositions, to wit: 1. That the contract is void on its face, because it is not authorized by the statute, and contemplates a diversion of the fund, in violation of the original grant. 2. That the vote of the county affirming it is void, because of want of legal notice of the time and place of voting. 3. Because of fraud in the manner in which the contract was procured.

In regard to the second of these propositions, which charges want of notice of the vote, we do not think it is established, so far as to render the vote void.

As regards the first proposition, it is not necessary to decide it in this case, and we do not decide that the contract is, for that reason alone, void. But we are of opinion that any purchaser of these lands from the county, or of the claim of the county to indemnity, must be held to know that in the hands of the county they were impressed with an important public trust, and that, in examining into the fairness and honesty of such a purchase, this consideration constitutes an important element of the decision. This is especially so when both the county and the purchaser agree in writing that the latter shall bear all responsibility, and shall indemnify the former for any violation of that trust.

In entering upon this inquiry, the first thing that strikes one upon the face of the record is the very vague idea which the supervisors of the county, and still more the citizens who voted on the proposition, must have had of the value of the thing they were selling. What lands were swamp lands had never

been clearly settled by the department, and how many acres were or ever had been embraced by the grant in Wright County was still more uncertain. It was obviously the dictate of ordinary prudence in dealing with a case like this that the citizens of the county should know what they were selling, as well as what they were going to get for it. It is clear they knew neither. They were selling the chances in a controversy with the government of the United States. A claim which would probably be good for several hundred acres, and which resulted in the allowance of over six thousand acres. What were they to get for it? The sum of $500, in public improvements. The nature and character of these improvements, the price of the work, and the time of its completion were left unsettled.

The result is that none have been built, and the Emigrant Company secures about six thousand acres of land of the value of $1.25 per acre, and $981 in cash. Over $8,000 for the vague promise of doing $500 worth of public improvements. The very inadequacy of the consideration is enough to throw the strongest suspicion on the fairness of the transaction.

The county of Wright, by the census of 1860, had a population of six hundred and fifty-three souls, and the vote that was given amounted only to ninety. Of these, taking the usual proportion, probably less than one-half had any real interest in the county.

What a chance for the exercise of the arts of persuasion in procuring a contract, all the advantages of which should be on one side, but which must affect the interests of the county after it should have become well populated.

But we are not left to surmise on this subject. This small population was divided into seven civil townships, each one of which had a supervisor; and these supervisors, when assembled at the county seat, constituted the governing body of the county. When the Emigrant Company began their operations with Wright County, they did not lay their proposition before the board of supervisors at a regular meeting; but their agent, a man by the name of Crawford, who signed the contract for the company, taking with him a jug of whiskey, went round to the house of each of these men, and thus gaining their assent to his project, brought them together in his own wagon to the

county seat, on a day not provided by law, nor authorized by any previous order or notice, and there induced them to sign this contract. Whether a like influence attended the subsequent voting at precincts, where the average vote was twelve to a township, we are not informed. But there is no reason to doubt that the arguments used with the supervisors were potent with the voters.

It appears that for some time before this contract was made the county had been urging her claim to swamp lands, before the department at Washington, through Savary, who acted as her agent. A short time before this contract was made, he informed the authorities of the county that their claim had been rejected, and that this rejection was accompanied by the announcement of a rule which left but little to hope for on the part of the county. Very shortly after this, Crawford, as the agent of the Emigrant Company, made his appearance in the county, and procured the contract we have mentioned.

As soon as this was done, Savary, as the agent of the Emigrant Company, by the assistance, as he says, of able lawyers, and in the cases of other counties with which the company had similar contracts, inaugurated proceedings to procure the reversal of the rule announced by the department. Succeeding in this, he presented the renewed claim of Wright County, and secured the allowance of several hundred acres still unsold in the county, and money and scrip for six thousand acres to be located elsewhere, in lieu of swamp lands sold by the government.

It is not a violent presumption, under all the circumstances of this case, that when, just after Savary had made the impression on the supervisors of Wright County that their case was hopeless, Crawford appeared in Wright County, he had some information of a different character on which he acted, and which was not communicated to the supervisors.

The record in this case is a voluminous one, consisting largely of depositions of witnesses. We are not convinced that any false representations were made by the agents or officers of the Emigrant Company. But the impression made upon us by the whole testimony is, that the officers and citizens of the county were in gross ignorance of the nature and value of what

they were selling; that the Emigrant Company, on the other hand, were well informed in regard to both, and withheld this information unfairly from the officers of the county; that the sudden change of the relationship of Savary from an unsuccessful agent of the county to a successful agent of the company requires an explanation which has not been satisfactorily given; that the fact that all parties knew they were dealing with a trust fund devoted by the donor to a specific purpose demanded the utmost good faith on the part of the purchaser; that so far from this, there is a provision for a diversion of the fund to other purposes, a gross inadequacy of consideration, and a successful speculation at the expense of the rights of the public.

For these reasons we concur with the Circuit Court that the contract should be rescinded, and that, saving the right of intermediate purchasers, there should be an accounting and a reconveyance, so far as may be.

Decree affirmed.

MR. CHIEF JUSTICE WAITE and MR. JUSTICE STRONG dissented.

MARTIN v. MARKS.

1. The act of March 3, 1857 (11 Stat. 251), confirmed to the several States their selections of swamp lands, which had then been reported to the Commissioner of the General Land-Office, so far as the lands were then "vacant and unappropriated, and not interfered with by an actual settlement" under existing laws.
2. The selections so confirmed could not be set aside, nor could titles to any of the land which they embraced, unless it came within the exceptions mentioned in that act, be thereafter conveyed by the United States to parties claiming adversely to the swamp-land grant.

ERROR to the Supreme Court of the State of Louisiana.

The facts are stated in the opinion of the court.

Mr. Edward C. Ingersoll and *Mr. F. P. Cuppy* for the plaintiff in error.

Mr. Thomas J. Durant and *Mr. C. W. Hornor, contra.*

MR. JUSTICE MILLER delivered the opinion of the court.

This was an action in the nature of ejectment, brought by Marks, the plaintiff below, who asserted title under the swamp-land act of Sept. 28, 1850, and the earlier act of March 2, 1849, in regard to the same class of lands in the State of Louisiana. The defendant relied on a patent from the United States, dated May 20, 1873. The evidence of plaintiff's title under the act of 1850, which is all we shall now consider, is as follows: —

"NORTH-WESTERN DISTRICT, LA.

"A. — List of swamp land unfit for cultivation, selected as inuring to the State of Louisiana under the provisions of an act of Congress approved 28th September, 1850, excepting such as are rightfully claimed or owned by individuals.

"To. 20 N., R. 14 W., west side of Red River.

Parts of section.	Section.	Area.	Estimated area.	Remarks.
All of.....	7		640.00	

"SURVEYOR-GENERAL'S OFFICE,
"DONALDSONVILLE, LA., May 18, 1852.

"Examined and approved.

(Sig.) "R. W. BOYD,
"*Surveyor-General, La.*"

To this was attached a certificate of S. S. Burdett, Commissioner of the General Land-Office, dated Department of the Interior, General Land-Office, April 30, 1875, that the foregoing was truly copied from a list of the swamp lands returned to that office by the surveyor-general of Louisiana. This was followed by sufficient evidence of title under the State of Louisiana. Neither this certificate nor any thing in the record shows precisely when this list was filed in the General Land-Office at Washington.

In *Emigrant Company* v. *County of Wright* (*supra*, p. 339) we had occasion to comment on the failure of the Secretary of the Interior to make out and certify to the States lists of the swamp lands to which they were severally entitled, and the

expedients to which they were compelled to resort to obtain the evidence of their title to those lands. We also held in previous cases that, when this was ascertained and the lands were identified by proper authority, the title related to the date of the grant, namely, Sept. 28, 1850, and superseded any subsequent grant or evidence of title issuing from the United States. *Railroad Company* v. *Smith*, 9 Wall. 95; *French* v. *Fyan et al.*, 93 U. S. 169.

The above certificate of what took place in the office of the surveyor-general shows what was the course adopted in Louisiana to secure the identification and lists of swamp lands in that State, and a similar course was elsewhere pursued. But these selections, though approved by the surveyor-general, who was merely a local officer, still lacked the authentication of the Secretary of the Interior, to whom alone Congress had confided the duty of confirming them, or making them for himself.

It will be observed that the selection in the present case was approved by the surveyor-general in May, 1852. It seems that, seven years after the passage of the swamp-land grant, this failure of the Secretary to act had become a grievance, for which Congress deemed it necessary to provide a remedy, by the act of March 8, 1857 (11 Stat. 251), which declares that the selection of swamp and overflowed lands granted to the States by the act of 1850, heretofore made and reported to the Commissioner of the General Land-Office, so far as the same shall remain vacant and unappropriated, and not interfered with by an actual settlement under any existing law of the United States, be and the same are hereby confirmed, and shall be approved and patented to the States in conformity to the provisions of said act.

If the paper signed by the surveyor-general, dated May 18, 1852, was on file in the General Land-Office at Washington, March 3, 1857, we have no doubt that the act completed and made perfect the title of the State of Louisiana to the land in controversy. If this were so, the title of the plaintiff below was superior to the patent issued subsequently to the defendant; for after the passage of that act the Land Department had no right to set aside the selections. The approval of them and the issue of patents to the State were mere ministerial acts,

in regard to which that department had no discretion, unless it was found that the lands were not vacant, or had been actually settled on adversely to the swamp-land claim. The act of 1850 was a present grant, subject to identification of the specific parcels coming within the description; and the selections confirmed by the act of 1857 furnished this identification, and perfected the title.

But, as we have said, there is in the record no conclusive evidence that this selection was on file in the General Land-Office at the passage of the act. It had been filed with and approved by the surveyor-general in Louisiana in 1852, and was found in that office when a copy was applied for in 1875. If objection had been taken to this defect of proof on the trial, the plaintiff would probably have been required to show when this list was reported to the commissioner. But no such objection was then made. Sitting here as an appellate court, two removes from that which tried the case originally, we hold: 1, that the jury or the court, if the latter tried the issue of fact, had a right to presume that the surveyor-general did his duty, and forwarded this list to the General Land-Office some time between May, 1852, and March 3, 1857; and, 2, that this question of evidence is not of that Federal character which authorizes us to review the decision of the Supreme Court of Louisiana upon it.

Judgment affirmed.

MARSH v. SEYMOUR.

SAME v. SAME.

1. The court concurs with the court below that reissued letters-patent No. 73, dated May 7, 1861, and No. 1683, dated May 31, 1864, for new and useful improvements in reaping-machines, and reissued letters No. 1682, dated May 31, 1864, for a new and useful improvement in harvesters, all of which were granted to William H. Seymour and others, are valid, and that they have been infringed by the respondents.
2. *Seymour* v. *Osborne* (11 Wall. 516) cited, and commented on.
3. Compensatory damages for the infringement of letters-patent may be allowed in equity, although the business of the infringer was so improvidently conducted as to yield no substantial profits.

APPEALS from the Circuit Court of the United States for the Eastern and the Western District of Pennsylvania.

The bill in the first case was filed in the Circuit Court of the United States for the Eastern District of Pennsylvania, by William H. Seymour and Dayton S. Morgan, of New York, to restrain the respondents, James S. Marsh, Elisha C. Marsh, Charles C. Marsh, and John A. Grier, from infringing reissued letters-patent No. 72, dated May 7, 1864, and No. 1683, dated May 31, 1864, for new and useful improvements in reaping-machines, and reissued letters No. 1682, dated May 31, 1864, for a new and useful improvement in harvesters, — all of which were granted to William H. Seymour and others, but of which he and Morgan are by assignment the owners. In the second case, the bill, which also alleges the infringement of the reissues above referred to, was filed by the same complainants in the Circuit Court for the Western District of Pennsylvania, the respondents being James S. Marsh, Charles C. Shorkley, Elisha Shorkley, and D. S. Kremer.

In each case there was a decree for the complainants, and the respondents appealed here.

The remaining facts are stated in the opinion of the court.

Mr. J. J. Coombs and *Mr. J. O. Parker* for the appellants.
Mr. George Harding, contra.

MR. JUSTICE CLIFFORD delivered the opinion of the court.

Owners of a patent, whether patentees or assignees, may seek redress for the unlawful use of the improvement which it secures, in the Circuit Court, by a suit at law or in equity, at their option; but in either form of proceeding they must allege and prove that they, or those under whom they claim, are the original and first inventors of the improvement, and that the opposite party or parties have infringed their exclusive right to make or use the same, or vend it to others to be used. Both allegations must be proved; but the letters-patent, if introduced and in due form, afford a *prima facie* presumption that the first allegation is true, which casts the burden of proof upon the defending party.

Patents, when inoperative or invalid, may in certain cases be surrendered and reissued; but the new patent in such case

must be for the same invention as the original patent; and if it is for a different invention, the reissue is invalid, for the reason that it was granted without authority of law.

Redress is sought in two suits in equity by the complainants for the infringement of five of the patents which they own, their title to the same not being in controversy. Service was made, appearance entered, answers and replications filed, proofs taken, hearing had; and the Circuit Court entered a decree, sustaining the validity of three of the patents, and that the complainants recover of the respondents the profits, gains, savings, and advantages they made in consequence of the infringement, together with the damages they sustained thereby, with costs and charges.

Such a decree was entered in each case, with a further decree, that the cause be referred to a master to compute the profits, gains, savings, and advantages made by the respondents. Both parties excepted to the report of the master in each case; and the court overruled their respective exceptions, and decreed that the complainants do recover of the respondents in the first case the sum of $6,280 damages for machines made and sold, adding six cents as nominal damages for machines not sold, with costs as taxed; and that the complainants do recover of the respondents in the second case the sum of $13,085.06, with costs as taxed, — the master having allowed $5, a sum equal to a license fee, for each machine sold, amounting to $13,085.06 nominal damages for machines manufactured and not sold.

Immediate appeal was taken by the respondents to this court, and they now assign the following errors: 1. That the first two, to wit, No. 1682 and No. 1683, are invalid, and that the Circuit Court erred in not sustaining the defence that the respective inventions were neither useful nor practical. 2. That the patent No. 72 is invalid, and that the Circuit Court erred in not sustaining the defence that the patentee was not the original inventor of the improvement. 3. That the Circuit Court erred in holding that the reissued patent No. 72 was for the same invention as the original patent. 4. That the Circuit Court erred in overruling the exceptions of the respondents to the master's report.

Three patents only are involved in the present investigation, as exhibited in the assignment of errors, as follows: 1. Reissue No. 72, which has but a single claim; to wit, for a quadrant-shaped platform of a reaping-machine, arranged relatively to the cutting apparatus, substantially as described and for the purpose set forth. 2. Reissued patent No. 1683, the charge of infringement being limited to the second claim, which is as follows: The combination in harvesting machines of the cutting apparatus with a quadrant-shaped platform in the rear of the cutting apparatus, a sweep-rake mechanism for the operating of the same, and devices for preventing the rise of the rake when operating on the grain, those five members being and operating substantially as set forth. 3. Reissue No. 1682, the charge of infringement extending only to the first claim of the patent, which is as follows: The combination of the cutting apparatus of a harvesting machine with a quadrant-shaped platform arranged in the rear thereof, a sweep-rake operated by mechanism, in such a manner that its teeth are caused to sweep over the platform in curves when acting on the grain, these parts being and operating substantially as set forth in the specification.

Two of the patents, to wit, the first and the second, are reissues from the original patent granted to the first-named complainant, — No. 72, dated May 7, 1861, being a reissue of one of the three parts of a prior reissue of the original patent, and No. 1683, dated May 31, 1864, being a reissue of another of the three parts of the prior reissue of the same original patent granted to the original patentee. Reissue No. 1682, dated May 31, 1864, is a second reissue from a prior reissue, when the original patent granted to Palmer and Williams was divided into two parts, and reissued on an amended specification.

Properly construed, the defences to the charge of infringing patent No. 72 are as follows: 1. That the patentee was not the original and first inventor of the improvement. 2. That the reissued patent is not for the same invention as the original patent. 3. That the respondents have not made, used, or sold machines constructed in accordance with the mechanism described in the complainants' patent.

Attempt is not made to call in question the correctness of

the construction given to the patent when the court here was required, five years ago, to define its specification; and being satisfied that the views then expressed were correct, they are adopted in the present case.

No. 72 consists in constructing the platform of a reaping-machine, upon which the cut grain falls as it is cut, in the shape of a quadrant or of a sector of a circle, placed just behind the cutting apparatus, and in such relation to the main frame that the grain, whether raked off by hand or by machinery located behind the cutting apparatus, can be swept around on the arc of a circle, and be dropped heads foremost on the ground, far enough from the standing grain to leave room for the team and machine to pass between the gavels and the standing grain, without the necessity of taking up the gavels before the machine comes round to cut the next swath.

Infringers, if they give due notice of such a defence, may show that the patentee is not the original and first inventor of the improvement; and if they establish that allegation, the prosecuting party is not entitled to recover, but the burden to prove the defence, if the patent is introduced in evidence, is cast upon the defending party to prove the affirmative of the issue. *Seymour* v. *Osborne*, 11 Wall. 516. Apply that rule to the case, and it is clear that the burden of proof under this issue is upon the respondents, as the patent of the complainants is made an exhibit in the record.

Appellants set up want of novelty, and refer, in the first place, to the machine of Nelson Platt in support of their theory. Precisely the same defence was set up in the prior case founded on this patent, in respect to which decision the respondents admit that it is an authority in this case to the extent that the issues and facts are the same. Properly understood, say the court in that case, the machine referred to does not contain a combination of the quadrant-shaped platform with the cutting apparatus, in any practical sense. On the contrary, it has a square platform combined with the cutting apparatus, and the quadrant-shaped platform is combined with the square platform; nor does it contain any quadrant-shaped platform to receive the grain as it falls, the court holding that the ingredients of the patent in that case, as well as the

combination, are different from those exhibited in the complainants' machine, and that the mode of operation is also different.

Support to that theory, of a decisive character, is also found in the testimony of the expert witness called by the respondents. He admits in his cross-examination that there are material and substantial differences between the machine represented in the respondents' exhibit and that of the complainants; that he does not find in the respondents' exhibit the quadrant or sector-shaped platform arranged as in the complainants' machine, so that the grain falls thereon as it is cut by the cutting apparatus; that the quadrant-shaped part of the platform shown in the respondents' exhibit has the grain conveyed to it from a rectangular platform, which is in the rear of the cutting apparatus, the quadrant-shaped part being immediately connected to the rectangular platform.

They, the respondents, refer also to the machine of Obed Hussey as anticipating the patented quadrant-shaped platform of the complainants, which is also the same defence as that made in the prior suit founded on this patent. Hussey, as the court remarked in that case, was much engaged, for a time, in the manufacture of reaping-machines of various kinds. Most of his machines, however, were constructed without any reel and with square platforms, so as to drop the cut grain at the rear of the platform, differing so widely from the patented machine of the complainants as to require no argument to show that they do not afford support to the present defence.

Apart from these, he made the one set up as a defence in this case, which has a square rectangular platform, to which is bolted an angular addition, giving the rear part, when the addition is attached, an angular form. Examined when the addition is bolted to the main platform, irrespective of the other ingredients of the combination, it approaches much nearer to the invention of the complainants than the other exhibit given in evidence. Undoubtedly it was built during the autumn prior to the harvest season, during which the inventor of the complainants made his invention of the quadrant-shaped platform; but the proofs introduced by the respondents show that the square platform of Hussey, to which was bolted the angular

addition, was not used for cutting grain during the harvesting season of its manufacture.

Proofs were introduced in the former case to support the theory that that exhibit anticipated the complainants' patent for the quadrant-shaped platform; but the court overruled that defence, upon two grounds: 1. That the two machines were substantially different. 2. That the machine as constructed was merely an experiment, and that it was never reduced to practice as an operative machine.

In support of the latter proposition, the court in that case remarked that the evidence showed that it was sent to the railroad depot, to be transported to some other place for trial; that there was no positive evidence that it was ever forwarded or used, or that it was capable of any beneficial use; that when it was transported from the depot, if at all, did not appear, but that it did appear that it was returned the next year, and was set against the wall by the side of the street in front of the shop, where it remained for some time; that it was then removed to the new shop of the maker, where it remained until it was taken to pieces and broken up by his order, and that it was never restored till long subsequent to the complainants' patent.

Three witnesses established the views there expressed, but the respondents contend that one of the three witnesses has since recalled certain important facts which he did not recollect at the time of his examination in the prior case. Proof was introduced by the respondents tending to show that the witness had seen, in the manufactory of the party last named, certain machines having an extra platform, with an angular guide-board bolted to the rear of the original platform, prior to the date of the complainants' invention, as shown in the evidence. Being asked whether he was not examined in the prior suit, the witness answered that he was; and he admits that he then stated that he did not remember but one machine with such a platform, and that he then stated that he had no knowledge what became of it, and he now testifies that those answers are correct.

During his examination-in-chief he testified to the effect that when it became necessary to have more room between the

gavels and the standing grain, so as to employ two horses abreast, an additional angular piece was attached to the back part of the platform, which finally developed itself into a part of a circle, the guide-board being sawed so that it could be easily bent.

In respect to that, he was asked if he made any statement of the kind in his deposition in the prior case, and his answer was that he did not; and when asked why he did not, his answer was that he did not think of it. Suffice it to say, that the subsequent explanations given by the witness as to the inconsistency of his statements, when one deposition is compared with the other, are not entirely satisfactory.

Taken as a whole, we are all of the opinion that the evidence of that witness is not sufficient to warrant the conclusion that the patent of the complainants is invalid, for at least two reasons: 1. Because the facts stated by the witness are, in view of the circumstances, too indefinite and uncertain to show that the machines which the witness saw embodied the same principle and mode of operation as the mechanism described in the complainants' patent. 2. Because the statements of the witness do not show that the machines were any thing more than abandoned experiments.

Two or three observations will be sufficient to show that the defence set up by the respondents, that the McCormick machine anticipates the complainants' invention of a quadrant-shaped platform, is entirely without merit. Both the specifications and the drawings of the patent afford abundant evidence to support that proposition. From these it appears that the grain cut by the machine is raked by the operator transversely across the machine, and that the raker, when in the act of discharging the cut grain upon the ground, endeavors to sweep it as near as possible into a position with the heads from the machine; but the platform is not so configured as to aid him in accomplishing that result, every thing in that regard depending upon the skill of the operator, and his physical ability to give the rake the right sweep at the right moment. Further discussion of the matter is deemed unnecessary, and the defence depending upon that machine is overruled.

Patents, in a proper case, may be surrendered and reissued,

but the reissued patent must be for the same invention as the original patent, else the reissue is invalid; but the patentee may redescribe his invention, and include in the description and claims of the specification not only what was well described before, but whatever else was suggested or substantially indicated in the old specification, drawings, or patent-office model, which properly belonged to the invention as actually made and perfected. Corrections may be made in the description, specification, or claims of the patent where the patentee has claimed as new more than he had a right to claim, or where the description, specification, or claim is defective or insufficient; but he cannot, under such an application, make material additions to the invention which were not described, suggested, nor substantially indicated in the original specifications, drawings, or patent-office model.

Extended discussion of those principles is unnecessary, as they are well settled by the repeated decisions of this court, and when properly applied to the case before the court, they show that the third assignment of error must be overruled, for the reason that the new patent does not contain any thing beyond what was well described or suggested in the specification of the original patent.

Passing for the present the question of infringement, the errors assigned in respect to the reissued patent No. 1682 will next be considered. They are as follows: 1. That the patent is invalid. 2. That the invention is neither useful nor practical.

Much discussion of the first error assigned cannot be required, as it is too indefinite to convey any distinct idea as to what is meant. Patents may be invalid because the patentee is not the original or first inventor of the improvement, or for the reason that the written description of the same is not in such full, clear, concise, and exact terms as to enable any person skilled in the art or science to which it appertains to make, construct, compound, or use the same; or a reissued patent may be invalid because it is not for the same invention as the original. None of these defences, however, if made, could be supported; and in view that no more explicit cause of error is assigned, the first assignment of error must be overruled.

Explicit explanation is made in the brief as to what is meant by the second assignment of error, which is, that the patent does not in terms describe any device to prevent the rake from rising when operating upon the grain, and enough appears to show that the rake in the first machine made by the complainants was not of sufficient weight to prevent it from rising when the teeth came in contact with heavy grain. Brief experiment, however, was sufficient to disclose the defect, which was immediately remedied by adding a spring of proper stiffness to hold the rake down without impairing the other operating devices to enable the rake to perform the function of removing the cut grain from the platform, and causing it to drop in gavels in the proper place.

None of these facts are controverted; but the respondents contend that the spring was a new invention, and that any one may make and use the patented machine, or vend the same to others to be used, without the spring, and not be liable as infringers; but the court is entirely of a different opinion, as the addition of the spring for the purpose suggested is nothing more than any practical mechanic or operator would supply as soon as the difficulty was discovered.

Viewed in the light of these suggestions, it is clear that the defence to the second patent must be overruled.

Like defences are set up to patent No. 1683, which must also be overruled for the same reasons, the opinion of the court being, that all three of the patents described in the bill of complaint are valid.

Suppose that is so, still it is insisted by the respondents that they have not been guilty of infringement, as charged in the respective bills of complaint.

Conclusive evidence is reported in the record, showing that the respondents were largely engaged in manufacturing machines of the description referred to by the two expert witnesses examined in the case. Exhibit 1, it is conceded by the respondents, is an accurate representation of the machines which they made and sold, and the complainants accept the admission as correct. Great certainty, therefore, attends the present inquiry, and there is very little, if any, more difficulty in ascertaining the proper construction of the

complainants' machines, so that the principal matter of investigation under this issue is whether the machines made and sold by the respondents infringe the patented machines of the complainants in the respect charged in the bill of complaint.

Reissue No. 72 has but one claim, and the charge is that that claim is infringed by the respondents, and the complainants also charge that the respondents infringe the first claim of the patent No. 1682 and the second claim of No. 1683.

Investigations of the kind are ordinarily best conducted by comparing the machine made by the respondent with the machines described in the complainants' patent, or patents, where more than one is embraced in the same suit. Due comparisons of the kind have been made; and the court is of the opinion that the several inventions of the complainants, excepting the claims pointed out as not infringed, are embodied in the machines made and sold by the respondents.

Decided support to that proposition is derived from the testimony of the expert witnesses examined by each of the contesting parties. Direct testimony to that effect is given by the complainants' expert witness. He says that he finds in Exhibit 1 the improvement described and specified in reissue No. 72; that the exhibit mentioned shows the quadrant-shaped platform arranged relatively to the cutting apparatus substantially as described in reissue No. 72, for the purpose of receiving the cut grain as it is severed and falls upon the platform and is swept in a circular form, heads foremost, upon the ground in the arc of a circle, out of the way of the team on the next round.

Speaking of the other two reissued patents, the witness says that he finds in that exhibit of the respondents the combination of a cutting apparatus of a harvesting machine with a quadrant-shaped platform arranged in the rear thereof, and a sweep-rake, operated by mechanism in such a manner that its teeth are caused to sweep over the platform in curves when acting on the grain, substantially as described in the complainants' reissued patents. When specially interrogated, he said he applied those remarks to both the other patents; and the expert witness examined by the respondents, in his cross-examination, fully confirms the substance and effect of those statements, and they

accord with what this court decided in the former case, and are believed to be correct. *Seymour* v. *Osborne*, *supra*.

Grant that, and still it is insisted by the respondents that the rake which they employ does not infringe the rake of the complainants; but the court is not able to sustain the proposition, as the rake of the respondents is combined with a quadrant-shaped platform, and performs the same function in substantially the same way as it sweeps over the platform to remove the cut grain from the same, and cause it to be deposited in gavels, as described in the complainants' patents.

Differences exist in the mode of attaching the arm to the machine, and in the means employed for its return preparatory for another sweep; but in the performance of the function of removing the cut grain and depositing the same in gavels, the two devices are substantially the same in the sense of the patent law; nor can it benefit the respondents if their mode of returning the device for a second operation is better than the complainants', as that cannot give them any right to make, use, or vend what is patented to another.

Nothing remains but to examine the exceptions to the master's report as confirmed by the Circuit Court.

Separate decrees were entered in the two cases, and the master made separate reports. He found in the first case that all claim for profits was waived by the complainants, the respondents contending and offering proofs to show that they made no profits. Hearing was had, and the master also found that the respondents had made fourteen hundred and sixty-two machines which infringed the complainants' patents, two hundred and six of which had not been sold. Of course, they made and sold twelve hundred and fifty-six machines, for which the master estimated the damages on the basis of the license fee of five dollars each machine, amounting to $6,280, to which he added six cents as nominal damages for the machines made by the respondents and not sold.

Pending the proceedings before the master in the second case, the complainants also withdrew their claim for profits, for the same reason as in the other case, and made claim for damages as for a license fee. Accordingly, the master found that the respondents had built twenty-eight hundred and

seventeen machines which infringed the complainants' rights, of which two hundred were not sold. Adopting the same rule as in the other case, he found as damages the license fee of five dollars on each of the machines made and sold, amounting to $18,085, to which he added six cents as nominal damages for the machines made and not sold.

Damages of a compensatory character may be allowed to a complainant in an equity suit, where it appears that the business of the infringer was so improvidently conducted that it did not yield any substantial profits, as in the case before the court. 16 Stat. 206; Rev. Stat., sect. 4921; *Birdsall et al.* v. *Coolidge*, 93 U. S. 64.

Without more, these explanations are sufficient to show that none of the exceptions to the master's report can be sustained, and they are respectively overruled.

The decree in each case will be affirmed; and it is

So ordered.

REPORTS OF THE DECISIONS

OF THE

SUPREME COURT OF THE UNITED STATES,

OCTOBER TERM, 1878.

STEWART *v.* SALAMON.

An appeal from the decree which the Circuit Court passed in exact accordance with the mandate of this court upon a previous appeal will, upon the motion of the appellee, be dismissed with costs.

MOTION to dismiss an appeal from the Circuit Court of the United States for the Southern District of Georgia.

At its October Term, 1876, this court, in *Stewart* v. *Salamon* (94 U. S. 434), reversed the decree of the court below, and remanded the cause for further proceedings, in accordance with the opinion then delivered. After the mandate was filed in the Circuit Court, Stewart and Cutts petitioned for leave to file a plea of *lis pendens*, and an amended answer to the original bill. The petition having been overruled, and a final decree entered in accordance with the mandate, they appealed here. The appellees now move to dismiss the appeal.

Mr. Philip Phillips in support of the motion.

Mr. Alexander H. Stephens and *Mr. Charles P. Culver*, *contra.*

MR. CHIEF JUSTICE WAITE delivered the opinion of the court.

An appeal will not be entertained by this court from a decree

entered in the circuit or other inferior court, in exact accordance with our mandate upon a previous appeal. Such a decree, when entered, is in effect our decree, and the appeal would be from ourselves to ourselves. If such an appeal is taken, however, we will, upon the application of the appellee, examine the decree entered, and if it conforms to the mandate, dismiss the case with costs. If it does not, the case will be remanded with appropriate directions for the correction of the error. The same rule applies to writs of error. This is not intended to interfere with any remedy the parties may have by *mandamus*.

This is an appeal from a decree entered upon our mandate. No complaint is made as to its form, and it seems to be in all respects according to our directions. The effort of the appellant was to open the case below, and to obtain leave to file new pleadings, introducing new defences. This he could not do. The rights of the parties in the subject-matter of the suit were finally determined upon the original appeal, and all that remained for the Circuit Court to do was to enter a decree in accordance with our instructions, and carry it into effect. If in the progress of the execution of the decree, after its entry, either party is aggrieved, he may appeal from the final decree in that behalf; but such an appeal will bring up for re-examination only the proceedings subsequent to the mandate.

The appeal will be dismissed with costs; and it is

So ordered.

MR. JUSTICE CLIFFORD dissenting.

Second appeals or writs of error, as the case may be, will lie in certain cases where it is alleged that the mandate of the appellate court has not been properly executed; but the appeal or writ of error in such a case will bring up nothing for re-examination except the proceedings subsequent to the mandate. Needful explanations may be derived from the original record, but the re-examination cannot extend to any thing that was decided in the antecedent appeal or writ of error. *The Lady Pike*, 96 U. S. 461; *Supervisors* v. *Kennicott*, 94 id. 498; *Himely* v. *Rose*, 5 Cranch, 313; *The Santa Maria*, 10 Wheat.

431; *Ex parte Sibbald*, 12 Pet. 492; *Roberts* v. *Cooper*, 20 How. 481; *Tyler* v. *Magwire*, 17 Wall. 253.

Authorities to that effect are very numerous, unanimous, and decisive; but cases coming into this court from the Circuit Court, under the twenty-second section of the Judiciary Act, where no question for re-examination is presented, whether brought here by writ of error or appeal, are not to be treated like a case with a similar record which comes up from a State court, under the twenty-fifth section of the same act, for the reason that it is the writ of error or the appeal which gives the jurisdiction under the twenty-second section of the act in all cases where the proceedings in bringing up the record are correct.

Instead of that, it is the question that gives the jurisdiction in cases brought here from a State court, under the twenty-fifth section of the same act. Consequently, in a case which comes here from a State court, it must appear by the record that some one of the questions stated in that section arose in the court below, and that it was determined as there required, otherwise this court is wholly without jurisdiction, and can only dismiss the writ of error.

Unlike that, if the case is brought up from a Circuit Court by writ of error or appeal, it is the writ of error or appeal which gives this court jurisdiction; and if the proceedings in bringing up the case are correct, the jurisdiction of the court is beyond question, and by the express words of the section the Supreme Court must reverse or affirm. 1 Stat. 84; *Taylor* v. *Morton*, 2 Black, 484.

Nor is there any alteration of that provision in that regard, except that the appellate court may affirm, modify, or reverse the judgment; the rule still being, that it is the writ of error or appeal in such cases that gives the jurisdiction, and that the appellate court can only affirm, modify, or reverse the judgment, or decree, where there is no error in bringing up the case. 17 Stat. 147.

Reported cases almost without number decide that a case regularly brought up under the twenty-second section of the Judiciary Act cannot be dismissed because the record presents no question for re-examination; the universal rule being, that

the plaintiff or appellant is entitled to be heard in order that he may show, if he can, that the error of which he complains appears in the record; and whether it does so appear or not cannot be inquired into in the form of a motion to dismiss. *Minor* v. *Tillotson*, 1 How. 287; *Stevens* v. *Gladding & Proud*, 19 id. 64; *Suydam* v. *Williamson et al.*, 20 id. 427.

Parties who sue out writs of error or take appeals for delay may be subjected to ten per cent damages in addition to interest, under the present rule of the court, which, in my judgment, is a much more appropriate remedy for the abuse of process than the one now prescribed by the majority of the court.

Writs of error or appeals sued out under the twenty-second section of the Judiciary Act may be dismissed for irregularities in bringing the case up; but if the proceedings in bringing the case up are regular, the court here is always bound to affirm, modify, or reverse the judgment or decree, except in a limited class of cases, where there has been a mistrial; and even in that class of cases it is usually necessary to reverse the judgment or decree in order to open the pleadings to a new trial. *Barnes* v. *Williams*, 11 Wheat. 445; *Carrington* v. *Pratt*, 18 How. 63; *Prentice* v. *Zane*, 8 id. 484.

Judgments or decrees of the Circuit Courts, brought there by original process, or removed there by writ of error or appeal from a District Court, where the matter in dispute exceeds the sum or value of $5,000, exclusive of costs, may be re-examined and reversed, modified, or affirmed in the Supreme Court. 1 Stat. 84; id. 244; 17 id. 197; 18 id. 316; Rev. Stat., sect. 701.

Certain conditions and proceedings are prescribed for bringing up such judgments and decrees; and if there is any material error in those proceedings, not amendable, the writ of error or appeal may be dismissed on that account as if the writ of error or appeal was not sued out or taken within two years from the rendition of the judgment or the entering of the decree; or if error was brought instead of appeal, or appeal instead of a writ of error, or if the judgment or decree did not exceed the sum or value of $5,000, the writ of error or appeal may be dismissed.

Cases of the kind frequently occur; but if the case is well brought up, and the matter in dispute exceeds the sum or value of $5,000, the writ of error or appeal, if sued out or taken within two years from date of the judgment or decree, gives this court jurisdiction to re-examine the alleged error or errors; and the act of Congress requires that this court shall reverse, modify, or affirm the judgment or decree.

Experience shows that cases are sometimes brought up for delay; but the remedy provided by Congress for such an abuse of process is that the Supreme Court may award to the respondent just damages for his delay, and single or double costs, in their discretion. 1 Stat. 84.

Beyond doubt, the record shows that the decree in this case was for the sum of $12,280, and that the appeal was taken on the day the decree was entered, and that there was no irregularity in bringing up the case. Nor is any thing of the kind pretended. Instead of that, the only objection is that it is a second appeal, which is not a valid objection.

ARTHUR v. MOLLER.

Certain chromo-lithographs, printed from oil-stones upon paper, and known as decalcomanie pictures, were imported. *Held*, that they were, as printed papers, subject, under sect. 2504 of the Revised Statutes, to a duty of twenty-five per cent *ad valorem*.

ERROR to the Circuit Court of the United States for the Southern District of New York.

The question involved in this case is, whether certain articles imported by the defendants, Charles Moller and Paul E. Vacquerel, into the port of New York, known as decalcomanie pictures, are subject to duties as "printed matter," or as "manufactures of paper, or of which paper is a component material, not otherwise provided for." 12 Stat. 192; 18 id. 218; Rev. Stat., p. 474, sect. 2504, also p. 479.

The statutes impose the duties in the language following; viz., On "books, periodicals, pamphlets, blank-books, bound

or unbound, and all printed matter, engravings, bound or unbound, illustrated books and papers, and maps and charts, twenty-five per cent *ad valorem*." Rev. Stat., *supra*.

On "paper, sized or glued, suitable only for printing-paper, twenty-five per cent *ad valorem;* printing, unsized, used for books and newspapers exclusively, twenty per cent *ad valorem;* manufactured of, or of which paper is a component material not otherwise provided for, thirty-five per cent *ad valorem*." Id., p. 479, sect. 2504.

The goods in question were chromo-lithographs, consisting of landscapes, scenery, and other figures, printed from oil-stones upon paper, with one color printed on top of the other until the picture is finished.

They are used for any purpose to which painting by hand can be applied. There are no letters constituting language upon the face of the paper.

They are made by means of lithographic stones, and printed from the stones successively one after the other, according to the number of colors; the difference between them and a chromo-lithograph being that a chromo is printed positive, while decalcomaine is printed positive and negative, but chiefly negative.

After the picture is printed, it is sometimes covered with a metal leaf, which is also put on by the process of printing; a sizing is printed on from the stone, the metal leaf being placed on top of the sizing by hand, it being too brittle to be placed on by the roller, and it is run through the press, which prints the metal leaf on top of the picture.

Arthur, the collector of the port, imposed and collected a duty of thirty-five per cent *ad valorem* upon the articles, as a manufacture of paper. The importers paid the duty under protest, and brought suit to recover the excess. The court below decided that the pictures were dutiable as printed matter, and not as manufactures of paper, and gave judgment for the plaintiffs. Arthur then brought the case here.

Mr. Assistant-Attorney-General Smith for the plaintiff in error.

Mr. James B. Craig, contra.

MR. JUSTICE HUNT delivered the opinion of the court.

We think that the decision of the court below was correct.

In *Arthur* v. *Rheims* (96 U. S. 143), it was held that the fact that artificial flowers were a manufacture of cotton did not determine that they were dutiable as components of cotton, but that they were properly taxable under the specific designation of "artificial flowers."

The same was held to be true of india-rubber goods, in *Arthur* v. *Davis* (id. 135), and of the steel forming a part of spectacles, in *Arthur* v. *Susfield* (id. 129).

No one would contend that a picture by an eminent artist painted on canvas would be subject to duties as a manufacture of flax, or that a line engraving of a high order of merit would come under the head of a manufacture of paper, or that a lithograph taken by a single impression does not fall under that branch of the statute which imposes duties on prints or printed matter.

We do not perceive that the fact that the result is produced by several impressions, and of a different color at each time, can make a difference in the conclusion. In country places, we see posted the advertisements of circuses and shows and of political meetings upon sheets of paper of large size, printed in large type of various colors, red, black, and blue, and requiring that the paper should pass more than once through the press. It would be a novel idea that these sheets were not printed matter.

It is not necessary, however, that the characters produced should be letters or numerals, or the result of types or stereotypes, or be reading matter, but the term "print" or "printing" includes the most of the forms of figures or characters or representations, colored or uncolored, that may be impressed on a yielding surface.

Webster defines "to print:"—

2. To take an impression of; to copy or take off the impress of; to stamp.

3. Hence, specifically, to strike off an impression of, or impressions of, from types, stereotype or engraved plates, or the like, by means of a press; or to print books, handbills, newspapers, pictures, and the like.

4. To mark by pressure; to form an impression upon; to cover with figures by a press or something analogous to it; as to print calico, &c.

Print, noun: a mark made by impression; a line, character, figure, or indentation made by the pressure of one body or thing upon another.

8. A printed cloth; a fabric figured by stamping.

Lithograph: a print from a drawing on stone, . . . as a lithographic picture.

Worcester says: "A mark, form, character; a figure made by impression."

McElrath's "Commercial Dictionary," —

"Prints . . . impressions on paper, or engravings on copper, steel, wood, or stone, representing some particular subject or composition, and which may be either colored or uncolored.

"Lithographs, pictures, or designs printed on paper from the lithographic stone, and on which they are traced or engraved. Both when plain and when printed in colors they are commercially regarded as engravings."

Homans's "Encyclopedia of Commerce," —

"Prints: impressions, on paper or some substance, of engravings on copper, steel, wood, stone, &c., representing some particular subject or composition. Prints, like painting, embrace every variety of subject, but differ very widely in the manner in which they are engraved."

McCulloch's "Dictionary of Commerce" uses the same language.

The pictures in question were printed from lithographic stones, by successive impressions, each impression giving a different portion of the view and of a different color. Like other pictures, they are made and used for the purpose of ornament. Equally with engravings, copper-plates, and lithographs, they are printed, and properly fall within the statutory designation of printed matter.

If further argument were needed, it would be found in the principle *noscitur a sociis*. "Printed matter" is named in the list with engravings, maps, charts, illustrated papers. With these, printed pictures are naturally associated.

With components and manufactures of paper are paper sized

or unsized and glued, used for books and newspapers exclusively. These are descriptions of the article paper itself, and have no natural relation to printed drawings or pictures.

Judgment affirmed.

TELEGRAPH COMPANY v. DAVENPORT.

TELEGRAPH COMPANY v. DAVENPORT.

1. The officers of a corporation are the custodians of its books; and it is their duty to see that a transfer of shares of its capital stock is properly made, either by the owner himself or by a person having authority from him. In either case, they must act upon their own responsibility. Accordingly, when the name of the owner of a certificate of stock had been forged to a blank form of transfer, and to a power of attorney indorsed on it, and the purchaser of the certificate in this form, using the forged power of attorney, obtained a transfer of the stock on the books of the corporation, — *Held*, in a suit by such owner against the corporation, that he was entitled to a decree compelling it to replace the stock on its books in his name, issue a proper certificate to him, and pay him the dividends received on the stock after its unauthorized transfer, or to an alternative decree for the value of the stock, with the amount of the dividends.
2. The negligence of their guardian cannot preclude minors from asserting, by suit, their right to stock belonging to them, which was so sold and transferred. If competent to transfer it, or to approve of the transfer made, they must, to create an estoppel against them, have, by some act or declaration by which the corporation was misled, authorized the use of their names, or subsequently approved such use by accepting the purchase-money with knowledge of the transfer; but under the statute of Ohio, where the minors who are the complainants herein resided, they were not, nor, without the authority of the Probate Court, was their guardian, competent to authorize a sale of their property.

APPEALS from the Circuit Court of the United States for the Southern District of Ohio.

These are suits in equity to compel the defendant, a corporation created under the laws of New York, to replace, in the name of the complainants, certain shares of its capital stock alleged to have belonged to them, and to have been transferred without their authority on its books to other parties; and to issue to them proper certificates for the same; and also to pay to them the dividends received on the shares since such unau-

thorized transfer. In case the company fail to replace the stock, the complainants ask for alternative judgments for the value of their respective shares.

The facts upon which the suits rest are these: In March, 1865, Charles Davenport, a citizen of Ohio, died, leaving a widow and two minor children, the complainants here, his heirs. He was possessed at the time, besides other property, of eleven hundred and seventy shares of the capital stock of the Western Union Telegraph Company, which, upon the settlement of his estate, were distributed equally between the widow and children, in whose names, respectively, they were entered on the books of the company, and to whom separate certificates were issued. She was appointed guardian of the children. To her, as such, the certificates were delivered, declaring on their face that only upon their surrender and cancellation they were transferable in person or by attorney on the books of the company. On the back of each one was printed a blank form of transfer and power of attorney. She put those belonging to the children, with the one issued to her, and some government bonds, in a tin box, which was locked and deposited in the Fourth National Bank of Cincinnati for safe keeping. Her brother, Robert W. Richey, at that time and for some years afterwards an officer in the bank, had access to the box. He kept the key to it during her absence from Cincinnati, in order to get for collection the coupons attached to the bonds when they became due.

In February, 1871, he took from this box the certificate of three hundred and ninety shares belonging to the complainant, Henry Davenport, and forged his name to the transfer and power of attorney on its back, adding his own signature as that of an attesting witness. In this form he sold the certificate; and the purchasers, using the forged power of attorney, obtained a transfer of the shares on the books of the company. Subsequently, Mrs. Davenport was in Cincinnati, and on one occasion sent for the box, but returned it to the bank without opening it or examining its contents, and being about to depart for Europe, she left the key with her brother. Soon afterwards, he took from the box the certificate of shares belonging to the other complainant, Katharine Davenport, and forged her name

to a like transfer and power of attorney, adding, as in the former case, his own signature as that of an attesting witness. In this form her certificate was also sold, and by the purchaser a transfer was obtained under the forged power of attorney on the books of the company. When these forgeries were committed, both children were minors, Henry being seventeen, and Katharine fifteen years of age. Henry was at the time at school in Switzerland, and in the summer of 1871 Mrs. Davenport and Katharine went to Europe. None of them were informed of the pretended transfers of the stock until the spring of 1873, and in 1874 these suits were brought. They were originally commenced in one of the courts of the State of Ohio, and were removed to the Circuit Court of the United States upon application of the defendant. That court rendered a decree for each complainant, and the company appealed to this court.

The cause was argued by *Mr. Grosvenor Porter Lowrey* and *Mr. J. Hubley Ashton* for the appellant, and by *Mr. John F. Follett* for the appellees.

MR. JUSTICE FIELD, after stating the case, delivered the opinion of the court.

Upon the facts stated there ought to be no question as to the right of the plaintiffs to have their shares replaced on the books of the company and proper certificates issued to them, and to recover the dividends accrued on the shares after the unauthorized transfer; or to have alternative judgments for the value of the shares and the dividends. Forgery can confer no power nor transfer any rights. The officers of the company are the custodians of its stock-books, and it is their duty to see that all transfers of shares are properly made, either by the stockholders themselves or persons having authority from them. If upon the presentation of a certificate for transfer they are at all doubtful of the identity of the party offering it with its owner, or if not satisfied of the genuineness of a power of attorney produced, they can require the identity of the party in the one case, and the genuineness of the document in the other, to be satisfactorily established before allowing the transfer to be made. In either case they must act upon their own responsi-

bility. In many instances they may be misled without any fault of their own, just as the most careful person may sometimes be induced to purchase property from one who has no title, and who may perhaps have acquired its possession by force or larceny. Neither the absence of blame on the part of the officers of the company in allowing an unauthorized transfer of stock, nor the good faith of the purchaser of stolen property, will avail as an answer to the demand of the true owner. The great principle that no one can be deprived of his property without his assent, except by the processes of the law, requires in the cases mentioned that the property wrongfully transferred or stolen should be restored to its rightful owner. The maintenance of that principle is essential to the peace and safety of society, and the insecurity which would follow any departure from it would cause far greater injury than any which can fall, in cases of unlawful appropriation of property, upon those who have been misled and defrauded.

We do not understand that the counsel of the appellant controvert these views, but they contend that the mother of the plaintiffs, as their guardian, was chargeable with culpable negligence in the keeping of the certificates, and, therefore, that the plaintiffs are estopped from claiming them or their value from the company. The negligence alleged consisted in the fact that she intrusted her brother with the key to the box in which they were deposited when she knew that he was insolvent, and that he had used, without her authority, funds received by him on a previous sale of a portion of her property; and the further fact, that when, in the summer of 1871, before leaving for Europe, she sent for the box, she returned it to the bank without examining its contents. To have allowed her brother, when known to be insolvent, to have access to the box after he had, without her authority, appropriated to his own use her funds, and to have returned the box to the bank in 1871 without examining its contents, were, according to the contention of counsel, offences of such gravity as to estop her wards, the minor children, from complaining of the company for allowing their stock to be transferred on its books under a power of attorney which he had forged. We do not think it at all necessary to comment at any length upon this singular position;

for even if it were possible, as it is not, to preclude the minor heirs from asserting their rights to property received from their father, by reason of any negligence of their guardian, we are unable to perceive any necessary connection between her brother's insolvency and misappropriation of her funds, and the forgery of the children's names, or between such forgery and her omission to open her box in 1871 and examine its contents. There is no circumstance here upon which an estoppel against the plaintiffs can be raised. To create an estoppel against them, there must have been some act or declaration indicating an authorization of the use of their names, by which the company was misled, or a subsequent approval of their use by acceptance of the moneys received with knowledge of the transfer. No act or declaration is mentioned, either of the guardian or her children, which tends in the slightest degree to show that any assent was given to the use of their names. But moreover, neither the guardian nor the children whilst they were minors, were competent, even by the most formal act, to authorize a transfer and sale of the property. Under the statute of Ohio, the intervention of the Probate Court was essential to any such proceeding. No inference could, therefore, be drawn from any negligence of theirs in support of a transfer of the property, where no order of that court authorizing a transfer had been made.

There are numerous decisions of the English and American courts in accordance with the views stated. They are cited by counsel in their briefs, and are given in a note to this opinion.[1] We do not think it important to refer to them specially, for no number of adjudications can add to the force of a simple statement of the facts. The decree of the court below in each case must be affirmed; and it is

So ordered.

[1] *Davis* v. *Bank of England*, 2 Bing. 393; *Hilgard* v. *South Sea Co. et al.*, 2 P. Wms. 76; *Sleman* v. *Bank of England*, 14 Sim. 475; *Taylor* v. *Midland Railway Co.*, 28 Beav. 287; *Ashby* v. *Blackwell*, 2 Eden, 299; *Lowry* v. *Commercial & Farmers' Bank of Baltimore*, Taney, C. C. Dec. 310; *Sewall* v. *Boston Water-Power Co.*, 4 Allen, 277; *Pratt* v. *Taunton Copper Co.*, 123 Mass. 110; *Chew* v. *Bank of Baltimore*, 14 Md. 299; *Pollock* v. *The National Bank*, 7 N. Y. 274; *Weaver* v. *Barden*, 49 id. 286; *Cohen* v. *Gwynn*, 4 Md. Ch. Dec. 357; *Dalton* v. *Midland Railway Co.*, 22 Eng. L. & Eq. 452; *Swan* v. *North British Australian Co.*, 7 Hurl. & Nor. 603.

COMMISSIONERS v. BANK OF COMMERCE.

In an action on certain coupons originally attached to bonds issued by the county of Pickens, South Carolina, the holder of them made as sole defendants to his complaint certain persons whom he named "as county commissioners" of said county. No objection was taken to the pleadings, nor any misnomer suggested. Verdict and judgment for the plaintiff. *Held*, 1. That neither the Constitution nor the statutes of that State declare the name by which a county shall be sued. 2. That, if the action should have been brought against the county by its corporate name, the misdescription, if objected to, was, by the statutes of that State, amendable at the trial; but it furnishes no ground for reversing the judgment.

ERROR to the Circuit Court of the United States for the District of South Carolina.

This was an action brought by the Bank of Commerce to recover the amount of sundry coupons which were formerly attached to bonds, purporting to be issued by the Board of County Commissioners of the County of Pickens, South Carolina, in aid of the Atlanta and Richmond Air-Line Railway Company. The complaint alleges that the said coupons are for different sums of money, depending on the size of the bonds, and are in the form following, to wit:—

"$7.00. The County of Pickens, State of South Carolina, will pay the bearer on the first day of January, 1874, seven dollars, at Pickens Court-house, for annual interest on bond No. 118.

"H. J. ANTHONY,
"*Chairman of Board of County Commissioners.*

"Receivable in payment of taxes."

— and that the plaintiff is the *bona fide* holder of them for value, and that they, though due, have not been paid.

Judgment was rendered in favor of the bank. Several defences, interposed below, were abandoned here. The remaining facts and the assignment of error are mentioned in the opinion of the court.

Mr. William W. Boyce for the plaintiff in error.

The "county of Pickens" not having been sued by its corporate name, no judgment on its contracts can be rendered against it in this suit. A corporation (unless empowered to sue and be sued in the name of its clerk or trustee) should sue

and be sued by the name in which it is incorporated. Brown, Actions at Law, 115; 1 Saunders, Plead. and Evid. 387. The statutes of the State do not authorize a suit for the enforcement of a county liability to be brought against the persons who constitute the board of commissioners; and the present judgment against them as individuals must be reversed, because there is nothing on the record showing their personal liability. The plaintiff below must therefore fail, as against the county, because he has not sued it; he must fail against the defendants, because he asserts a claim for the payment of which they are not individually bound. The words "county commissioners" added to their names are a *descriptio personarum*, and do not define or limit their liability.

The objection is not for misnomer, nor is it one of form. It is for a defect in matter of substance, apparent on the pleadings, for which error lies.

Mr. James Lowndes and *Mr. W. E. Earle*, *contra*.

MR. JUSTICE HUNT delivered the opinion of the court.

The defendants are described in the complaint as H. J. Anthony, Thomas R. Price, and William Smith, "commissioners of the county of Pickens," and the demand set forth in the complaint is against the county of Pickens. A trial upon the merits resulted in a judgment in favor of the plaintiff for $7,132. The defences set up in the answer, and upon which the case was tried in the Circuit Court, are abandoned; and the defendants seek to reverse the judgment, upon the allegation that there is a misdescription of the defendants. Judgment cannot be had against the county, it is said, because the county is not sued; nor against the commissioners named, because the cause of action is not against them, but against the county.

There is no foundation for this course of reasoning.

By art. 4, sect. 19, of the Constitution of South Carolina (of 1868), it is thus provided: —

"The qualified electors of each county shall elect three persons for the term of two years, who shall constitute a board of county commissioners, which shall have jurisdiction over roads, highways, ferries, bridges, and all matters relating to taxes, disbursements of

money for county purposes, and in every other case that may be necessary to the internal improvement and local concerns of the respective counties: *Provided*, that in all cases there shall be the right of appeal to the State courts."

By the Revised Statutes of that State, 147, the powers of these officers are defined at length. Among them are the following: —

"To examine, settle, and allow all accounts chargeable against such county, and draw orders on the county treasurer for the same; but the county commissioners shall not draw any order upon the county treasurer until after the monthly return of the treasurer shall have been made to the county commissioners of the amount of funds collected, nor unless he has the funds in the treasury to pay the same."

The specification of the powers and duties of these officers extends over several pages of the statute. It may be said, in brief, that they are charged with the management of the internal affairs of the county, and occupy substantially the place held by boards of supervisors in many of the States.

The Constitution of the State of South Carolina (of 1868) does not declare the several counties of the State to be incorporations. In art. 2, sect 3, entitled "Legislative Department," it is ordained as follows: —

"The judicial districts shall hereafter be designated as counties, and the boundaries of the several counties shall remain as they are established, except," &c. . . . "Each county shall constitute one election district."

By art. 9, sect. 8, it is provided: —

"The corporate authorities of counties, townships, school districts, cities, towns, and villages may be invested with power to collect taxes for corporate purposes."

"SECT. 9. The General Assembly shall provide for the incorporation of cities and towns, and shall restrict their powers of taxation, borrowing money, contracting debts, and loaning their credit."

It is assumed by these provisions that counties are or may be made corporations.

Accordingly, it was enacted by the legislature in the same year (Stat. 1868, 134), as follows: —

"Each county shall be a body politic and corporate for the following purposes: to sue and be sued, purchase and hold for the use of the county personal estate and land lying within its own limits, and to make necessary contracts and do necessary acts in relation to the property and concerns of the county."

Every county of the State was expressly authorized by the statute of Sept. 18, 1868, to make the contract out of which the present cause of action arose, and the pleadings concede that the county of Pickens did make it.

We do not find in the Constitution or statutes of South Carolina any direction as to the name by which a county shall be sued. We see no objection to the form adopted in the present case.

But if it be conceded that this action should have been brought against the county of Pickens, by the corporate name of the county of Pickens, the error is simply one of a misdescription of the parties defendant, a misnomer amendable at the trial if objected to, and to be disregarded, both at the trial and on appeal, when such objection is not taken.

The Revised Statutes of South Carolina provide (sect. 199) that "the court shall in every stage of the action disregard any error or defect in the pleadings or proceedings which shall not affect the substantial rights of the adverse party, and no judgment shall be reversed by reason of such error or defect."

By another section (196) it is provided that "the court may, before or after judgment, in furtherance of justice and on such terms as may be proper, amend any pleading, process, or proceeding, by adding or striking out the name of any party, or by correcting a mistake in the name of a party or a mistake in any other respect, or by inserting other allegations material to the case, or when the amendment does not change substantially the claim or defence, by conforming the pleadings or proceedings to the facts proved."

Where suit was brought against "William H. Cockle, intendant, and John R. Schwab, Joseph Herndon, Robert Wright, and Edward Wheeler, wardens, the town council of Yorkville, in the State of South Carolina," it was objected at the hearing on appeal that the suit was against the parties in their individual capacity, and not as the town council of Yorkville. The

Supreme Court said, "The defendants have failed to present the objection at the proper time and in the proper way, and can now claim no benefit from it." MS. Case.

The statutes of the State of New York on the subject of amendments are almost verbatim, the same as those of South Carolina above quoted.

In the case of the *Bank of Havana* v. *Magee* (20 N. Y. 355), Charles Cook was an individual banker, transacting business under the name of the Bank of Havanna, there being in fact no corporation of that name. On the trial, a judgment in favor of the Bank of Havanna was offered in evidence, which was objected to on the ground that the plaintiff had not proved itself to be a corporation, which was overruled. In sustaining the ruling, the Court of Appeals, by Denio, J., said: "But I am of the opinion that when it appeared on the trial that the plaintiff's attorney had fallen into the mistake of stating the name which Mr. Cook had given to his bank as the creditor of Wickham and as the plaintiff in the suit, instead of his own name, a plain case was presented for amendment, under sect. 173 of the Code."

The error was disregarded.

So in *Traver* v. *Eighth Avenue R. R. Co.* (6 Abb. Pr. N. S. (N. Y.) 46), the Court of Appeals, Grover, J., delivering the opinion, cited the foregoing case with approval, and held that where an action was brought by a married woman in her maiden name it was a mere misnomer, and when not objected to at the trial would be disregarded on appeal.

There being no error of which we can take notice, the judgment must be affirmed; and it is

So ordered.

WORK v. LEATHERS.

1. Where the owner of a vessel charters her, there arises, unless the contrary be shown, an implied contract on his part that she is seaworthy and suitable for the service in which she is to be employed. He is, therefore, bound, unless prevented by the perils of the sea or unavoidable accident, to keep her in proper repair, and is not excused for any defects known or unknown.
2. A defect in the vessel, which is developed without any apparent cause, is presumed to have existed when the service began.

APPEAL from the Circuit Court of the United States for the District of Louisiana.

The facts are stated in the opinion of the court.

Mr. Thomas Hunton, for the appellant, cited *Spofford et al.* v. *Dodge et al.*, 14 Mass. 60; *Havelock* v. *Geddes*, 6 Rob. Adm. 10.

Mr. Charles B. Singleton, *contra*, cited *Kimball* v. *Tucker et al.*, 10 Mass. 192; 3 Kent, Com. 205; Abbott, Shipp. 340; 1 Pars. Shipp. and Adm. 285, note (*a*); *Devillers* v. *Schooner John Bell et al.*, 6 La. Ann. 544; *Rathbone* v. *Neal*, 4 id. 563; *Talcot* v. *Commercial Insurance Co.*, 2 Johns. (N. Y.) 124; 2 Phillips, Ins., sect. 2079; *Sneethen* v. *Memphis Insurance Co.*, 3 La. Ann. 474.

MR. JUSTICE SWAYNE delivered the opinion of the court.

This is a case in admiralty. On the 31st of March, 1869, Work, the libellant and appellant, chartered to Leathers the steamer "Vicksburg" for two months from that date. Leathers was to pay $1,750 per month. It is alleged by Work, but denied, that Leathers also stipulated to return the boat in as good condition as he received her, ordinary wear and tear excepted. Leathers took possession of the boat, and paid the sum agreed upon for the first month. He also paid $560 on account of the second month. During that month a shaft broke, and the cylinder-head of one of her engines was blown out. Leathers thereupon returned the boat, and refused to repair her. The libellant claims $1,850 for the repairs which he alleges Leathers was bound to make; $1,190, the balance of the stipulated compensation for the second month; and $5,000 for damages arising otherwise from the alleged breaches

of the contract by the respondent. Leathers insists that the boat was utterly unseaworthy when he received her, that her timbers were rotten, that the shaft was too small and cracked, though the crack was not apparent; that the boilers were unsafe, that the shaft broke and the cylinder blew out when the boat was in smooth, deep water, carrying only one hundred and ten pounds of steam; that the sum of $560 paid for the second month was the amount due according to the time that had elapsed when the boat became disabled and he surrendered her to the owner.

Where the owner of a vessel charters her, or offers her for freight, he is bound to see that she is seaworthy and suitable for the service in which she is to be employed. If there be defects known, or not known, he is not excused. He is obliged to keep her in proper repair, unless prevented by perils of the sea or unavoidable accident. Such is the implied contract where the contrary does not appear. *Putnam* v. *Wood*, 3 Mass. 481; 3 Kent, Com. 205. The owner is liable for the breach of his contract, but the stipulation of seaworthiness is not so far a condition precedent that the hirer is not liable in such case for any of the charter-money. If he uses her, he must pay for the use to the extent to which it goes. 1 Pars. Adm. 265; 3 Kent, Com. *supra;* Abbott, Shipp. (5th Am. ed.) 340. If a defect without any apparent cause be developed, it is to be presumed it existed when the service began. *Talcot* v. *Commercial Insurance Co.*, 2 Johns. (N. Y.) 124.

The facts set up in the answer, by way of defence, are fully established by the proofs. The current is all one way. There is no conflict. It could do no good in any wise to examine the evidence in detail. It is sufficient to announce our conclusion.

The decree of the court below dismissing the libel is

Affirmed.

BURGESS v. SALMON.

In the forenoon of March 3, 1875, A. stamped, sold, and removed for consumption or use from the place of manufacture certain tobacco, which, under sect. 3368 of the Revised Statutes, was subject to a tax of twenty cents per pound. On the afternoon of that day, the President approved the act of March 3, 1875 (18 Stat. 339), increasing the tax to twenty-four cents per pound, but providing that such increase should "not apply to tobacco on which the tax under existing laws shall have been paid when this act takes effect." *Held*, that the increase of tax under that act did not apply to the tobacco so stamped, sold, and removed.

ERROR to the Circuit Court of the United States for the Eastern District of Virginia.

The facts are stated in the opinion of the court.

Mr. Assistant-Attorney-General Smith for the plaintiff in error.

Mr. W. P. Burwell, contra.

MR. JUSTICE HUNT delivered the opinion of the court.

The facts of this case, as agreed upon, were these: That Burgess was collector of internal revenue for the third collection district of Virginia, and in that capacity exacted from and received of Salmon & Hancock, and paid into the treasury of the United States, the sum of $377.80, as an additional tax of four cents a pound on a quantity of tobacco belonging to them. It was thus exacted on the third day of March, 1875, under the act of that date, which provides as follows: —

"That sect. 3368 of the Revised Statutes be amended by striking out the words 'twenty cents a pound,' and inserting in lieu thereof the words 'twenty-four cents a pound.'" . . . "*Provided*, that the increase of tax herein provided for shall not apply to tobacco on which the tax under existing laws shall have been paid when this act takes effect." 18 Stat. 339.

The act contains also the provision following, viz.: —

"Every person who removes from his manufactory tobacco without the proper stamp being affixed and cancelled . . . shall, for each offence, be fined not less than $1,000 and not more than $5,000, and be imprisoned not less than one year and not more than two years."

The tobacco in question was stamped, sold, and removed for consumption or use from the place of manufacture, and beyond the control of Salmon & Hancock, in the forenoon of March 3, 1875, and the above-named act of Congress was approved in the afternoon of that day, after the stamping and removal of this tobacco, which, when removed, had been stamped at twenty cents a pound. Payment of the additional four cents a pound was made under protest, and an appeal to the commissioner of internal revenue regularly taken and overruled.

The manufacturers brought suit to recover back the amount, and recovered judgment in the court below. The collector thereupon sued out this writ of error.

The case presents but a single point: Can a manufacturer be punished, criminally and civilly, — civilly here, — for the violation of a statute, when the statute was not in force at the time the act was done? In other words, Can a person be thus punished when he did not contravene the provisions of the statute? In still other words, Can one be punished for offending against the provisions of a statute from the effects of which he was expressly exempted?

We are relieved by the agreed statement, to which reference is made, from examining a question of importance, and perhaps of difficulty, respecting the *punctum temporis* when a statute takes effect. Does it, as the collector contends, have operation in the present instance on the third day of March, 1875, and cover the whole of that day, commencing at midnight of March the second? If the time may be inquired into, to ascertain at what hour or what fraction of an hour of the day the form of the law becomes complete, is it to be ascertained by the court as a question of law, or to be decided as an issue of fact?

It is agreed by the parties to the record that in fact the duty of twenty per cent had been paid on the tobacco in question, and it had been removed from the storehouse, before the act of March 3, 1875, took effect; and we content ourselves by acting upon that agreement.

We are of opinion that the government must fail, upon the facts agreed upon; to wit, that the duty of twenty per cent had

been paid and the tobacco had been removed before the act had been approved by the President. The seventh section of article 1 of the Constitution of the United States provides that every bill which shall have passed the House of Representatives and the Senate shall, before it becomes a law, be presented to the President of the United States. If he approve he shall sign it, but if not he shall return it, with his objections, to that House in which it originated, . . . who shall proceed to reconsider it. . . . If any bill shall not be returned by the President within ten days (Sundays excepted) after it shall have been presented to him, the same shall be a law, in like manner as if he had signed it, unless the Congress, by their adjournment, prevent its return, in which case it shall not be a law.

In the present case, the President approved the bill; and the time of such approval points out the earliest possible moment at which it could become a law, or, in the words of the act of March 3, 1875, at which it could take effect.

In *Lapeyre* v. *United States* (17 Wall. 191), it was said *obiter*, "The act became effectual upon the day of its date. In some cases it is operative from the first moment of that day. Fractions of the day are not recognized. An inquiry involving that subject is inadmissible." The question involved in that case was whether a proclamation issued by President Johnson, bearing date of June 24, 1865, removing certain restrictions upon commercial intercourse, took effect on that day, or whether it took effect on the day it was published and promulgated, which was on the 27th of the same month. It was held by a majority of this court that it took effect from its date. The question was upon the 24th or the 27th of June, and the point of the portion of a day was not involved. While the general proposition may be true, that where no special circumstances exist, the entire day on which the act was passed may be included, there is nothing in that case to make it an authority on the point before us.

In the *Matter of Howes* (21 Vt. 619), it appeared that the Bankrupt Act was repealed March 3, 1843. Howes presented his petition on that day, and it was held that he was too late, that on questions of that nature there can be no divisions of a day.

In the *Matter of Welman* (20 id. 653), the question was the same, and decided in the same way. While stating the general rule as above, the court say they agree with Lord Mansfield in *Coombs* v. *Pitt* (4 Burr. 1423), that in particular cases the very hour may well be shown when it need and can be done.

Arnold v. *United States* (9 Cranch, 104) is in affirmance of the same general principle. The act of July 1, 1812, there discussed, provided "that an additional duty of one hundred per cent upon the permanent duties now imposed by law . . . shall be levied and collected on all goods, wares, and merchandises which shall, from and after the passage of this act, be imported into the United States from any foreign port or place." The goods were brought into the collection district of Providence on the first day of July, 1812. The court say, "The statute was to take effect from its passage, and it is a general rule that, where the computation is to be made from an act done, the day on which the act is done is to be included."

See the case of Richardson (2 Story, 571), decided by the same judge, sustaining the view just taken.

In the present case, the acts and admissions of the government establish the position that the duties exacted by law had been fully paid, and the goods had been surrendered and transported before the President had approved the act of Congress imposing an increased duty upon them.

To impose upon the owner of the goods a criminal punishment or a penalty of $377 for not paying an additional tax of four cents a pound, would subject him to the operation of an *ex post facto* law.

An *ex post facto* law is one which imposes a punishment for an act which was not punishable at the time it was committed, or a punishment in addition to that then prescribed. *Carpenter et al.* v. *Commonwealth of Pennsylvania*, 17 How. 456.

Had the proceeding against Salmon & Hancock been taken by indictment instead of suit for the excess of the tax, and the one was equally authorized with the other, the proceeding would certainly have fallen within the description of an *ex post facto* law.

In *Fletcher* v. *Peck* (6 Cranch, 87), it was decided that an

act of the legislature by which a man's estate shall be seized for a crime which was not declared to be an offence by a previous law, was void.

In *Cummings* v. *Missouri* (4 Wall. 277), it was held that the passage of an act imposing a penalty on a priest for the performance of an act innocent at the time it was committed, was void.

To the same purport is *Pierce* v. *Carskaden*, 16 id. 284.

The cases cited hold that the *ex post facto* effect of a law cannot be evaded by giving a civil form to that which is essentially criminal. *Cummings* v. *Missouri*, *supra*; Potter's Dwarris, 162, 163, note 9.

Judgment affirmed.

PETTIGREW v. UNITED STATES.

1. An action by the United States, to recover the proceeds arising from sales of tobacco, which, found in the hands of the defendant, a bailee, was seized as forfeited for the non-payment of the tax due thereon, and then left with him, under an agreement with the collector of internal revenue that he, the bailee, should sell it and hold the proceeds, subject to the decision of the proper court, is, within the meaning of sect. 699 of the Revised Statutes, an action to enforce a revenue law, and this court has jurisdiction to re-examine the judgment, without regard to the amount involved.
2. The defendant having set up in his plea that, while he held such proceeds, pursuant to the agreement, a suit to recover them, defended by A., the owner of the tobacco, was dismissed by the United States after plea filed, and that the defendant, after retaining them for nearly four years, and no other suit having been brought, paid them to A., the court, although testimony was offered sustaining his plea, instructed the jury that he was liable. *Held*, that the instruction was erroneous.

ERROR to the Circuit Court of the United States for the Western District of Tennessee.

The facts are stated in the opinion of the court.

Mr. W. Y. C. Humes for the plaintiff in error.

Mr. Assistant-Attorney-General Smith, *contra.*

MR. JUSTICE MILLER delivered the opinion of the court.

The judgment in this case is for $1,354.35, and a question is

raised as to the jurisdiction of this court, because it does not exceed $2,000.

If it is an action to enforce a revenue law of the United States, we have jurisdiction without regard to amount. Rev. Stat., sect. 699. If it is not such an action, we have not.

The counts in the original complaint are very clearly counts on a contract of bailment and for money had and received. But a demurrer to the declaration was sustained, and the case was tried on an amended declaration.

The amended declaration sets forth the seizure, while in possession of the defendants, of ninety caddies of tobacco as forfeited to the United States, on account of false and fraudulent stamps and inspection marks found there by Rolf S. Sanders, a collector of internal revenue; that said Sanders and defendants having entered into an unlawful and unauthorized agreement that defendants should sell the tobacco and hold the proceeds of the sale subject to the decision of the proper court, in proceedings to be instituted therein for the condemnation of the tobacco, said agreement was void; by reason whereof the defendants became liable to the United States for the value of the tobacco, which they have refused to pay. This is repeated in the second count, and the third is for money had and received. The substance of this is, that the tobacco being forfeited for a violation of the revenue law, and a seizure made, and the goods left with the defendants, the contemporaneous agreement is void, and the defendants are proceeded against *in personam* for the value of the goods so left with them, which cannot now be found. It would be a very narrow and technical definition of the phrase "enforcement of any revenue law" which did not recognize this action as one brought for that purpose. If there had been no revenue law which made this tobacco liable to seizure, the complaint would be bad on demurrer. The foundation of the action is the right which the revenue law vests in the United States to this property, and it is the enforcement of this right that is sought in this action. This was clearly the view which the court took of the matter, and in that view of it instructed the jury as follows: —

"That if they believed the tobacco caddies had upon them

counterfeit stamps or brands, that such fact forfeited it to the government.

"And if the proper officer seized it as forfeited, and the defendants sold the same by direction of the officer seizing it, and received the money, and had not paid it, or any part thereof, to the government, they remained liable for the amount so received by them, and they should find a verdict for the plaintiffs."

The judge evidently understood that he was enforcing the revenue law against a person unlawfully dealing with property which had been found in his possession forfeited to the government by reason of a violation of that law. We think this court has jurisdiction, under the section of the Revised Statutes cited.

The third plea of the defendants sets out the facts that, up to the time the goods were seized, they held them on sale for commission for Glazier, Luko, & Co., of St. Louis, and knew nothing of the causes of the alleged seizure; that at the request of Sanders, the officer who made the seizure, they consented to sell the goods, and hold the proceeds subject to proceedings in court to condemn them; that defendants were directed by Sanders to sell the tobacco, because it would become worthless if detained until the end of the suit; that they did sell the tobacco, and while the proceeds were in their hands a suit was commenced against them for the money, which was defended by Glazier, Luko, & Co., and dismissed by the district attorney after plea filed; that after retaining the money for nearly four years, and no other suit being brought for the money, or other proceedings against the tobacco, or any demand of them, they paid over the money to the parties from whom they had received the tobacco. To this plea a demurrer was filed and overruled, and issue was taken on it. The bill of exceptions shows that testimony was offered tending to sustain every allegation of the plea; but by giving the instruction copied above, the court, in effect, held that, if the jury believed the plea to be sustained by the evidence, it was no defence.

In this we think the court erred.

The defendants were bailees of Glazier, Luko, & Co. when the officer made the seizure. They were not charged with any offence against the revenue laws, and they were in no danger

of loss, since they did not own the tobacco. It was a matter of indifference to them, in a pecuniary sense, what the officer did with the tobacco. It was his own convenience, therefore, and the interest of the government, that induced them to take charge of it, and sell it to prevent loss; and they did so, holding the proceeds subject to judicial proceedings, to be instituted to determine the right of the government to those proceeds. We see nothing in this to condemn. The agreement made was the best that could have been made, both for the government and the owner of the goods, and was one in which the defendants were to remain bailees under the changed condition of affairs.

Undoubtedly, the officer could have required them, as a condition of leaving the property where he found it, to pay the money it sold for to him, or into the treasury, or into the registry of the court. But he did not. And we see no reason to hold that it was not competent for the defendants to retain the property on the terms which he proposed. If he had required them to sell it as property of the United States, and pay them the proceeds, they might have relieved themselves of all trouble by refusing. The officer may not have performed his duty. It was probably his duty when he made seizure of the property to deliver it to some other officer of the government, and have it libelled at once, and a warrant of seizure issued. But this neglect of his duty did not make void the promise of the defendants to take suitable care of the property, and hold it ready for such order as the court which might take jurisdiction of the proceeding should make.

If the contract of defendants was obligatory on them, as we think it was, the evidence shows that they did all that it required of them. They sold the property, and held the money until a suit was instituted against them for it. The right to the money could as well have been decided in that suit as in this; but after the owners of the tobacco had taken the defence of the suit on themselves, and filed a plea, the suit was dismissed by the attorney for the United States. The defendants still held the money for nearly four years, awaiting any further legal proceedings, or any order from Sanders or from the government. In the absence of any thing of the kind, they felt it to be their duty to pay the money to the parties from whom

they had received the tobacco. And we think they were right. They took the goods as bailees, to hold subject to a proceeding for condemnation. Such a suit, in effect, was commenced and dismissed. They were only bound to hold after this for a reasonable time; and when that was passed, their duty under the agreement was ended, and their obligation to Glazier, Luko, & Co. revived.

This is the honest and fair view of the subject, and we think it conflicts with no rule of law.

The instructions of the judge were in conflict with this view, and the judgment must, therefore, be reversed, and a new trial granted; and it is

So ordered.

NAUVOO v. RITTER.

1. In Illinois, a copy of the written instrument on which the action is founded must be filed with the declaration, and it constitutes part of the pleadings in the case.
2. Where bonds issued by a municipal corporation, having lawful authority to issue them upon the performance of certain conditions precedent, refer upon their face to such authority, and there is printed on their back a copy of an ordinance declaring such performance, it is not error, in an action against the corporation by an innocent holder of them, to sustain a demurrer to a special plea tendering an issue as to the authority of the corporation to issue them, or as to matters of fact contained in the recital of such ordinance.
3. The court reaffirms the ruling in *Laber* v. *Cooper* (7 Wall. 565), that, where a case has been tried and a verdict rendered as if the pleadings had been perfect, the failure to demur or to reply to a special plea setting up a matter of defence furnishes no ground for reversing the judgment.

ERROR to the Circuit Court of the United States for the Southern District of Illinois.

This was an action of debt by George A. Ritter, a citizen of Missouri, against the city of Nauvoo, a corporation existing under the laws of Illinois, on four bonds and the coupons thereto attached, issued by that city in 1854, in part payment of its subscription to the capital stock of the Warsaw and Rockford Railroad Company. The declaration contained, besides the common counts, a count upon each of the bonds; and

there was filed with it a copy of one of the bonds and coupons sued on. It averred that the other bonds and coupons differed from said copy in number and date only. The bonds recite on their face that they are "issued under authority of an ordinance entitled 'An ordinance authorizing subscription to the Warsaw and Rockford Railroad Company, and for other purposes,' passed Dec. 17, 1853, by the city council of the city of Nauvoo, a copy of which is hereto attached." The ordinance referred to in the recital, and which is printed on the back of the bonds, after referring to the act of the legislature of Illinois, entitled "An Act supplemental to an act entitled 'An Act to provide for a general system of railroad incorporation,' approved Nov. 6, 1849," and setting forth its provisions, contains the following: —

"And whereas, by virtue of the powers granted to counties and cities by the above-recited provisions of said supplemental act, the common council of the city of Nauvoo did, on the 4th of June, A.D. 1853, make an order submitting it to the legal voters of said city, at an election to be held at the usual place of holding elections in said city, on the thirtieth day of July, A.D. 1853, to ascertain the wishes of the people of said city in reference to the subscription by the common council of said city to the capital stock of the Warsaw and Rockford Railroad Company to the amount of $25,000, to be paid in bonds of said city, having twenty years to run, and bearing an annual interest of eight per cent, payable semi-annually.

"And whereas said election was held agreeably to said order, thirty days' previous notice having been given, as required by said act aforesaid, and the returns of said elections in due form made to the city council, who canvassed at the regular meeting held on the first day of August, A.D. 1853, when it appeared there had been cast for subscription a large majority of the votes of said city, the number of votes given for subscription being a large majority of all the votes polled at the last general election in said city, and a much larger vote than that required by the act aforesaid to authorize said subscription."

Then follow sections authorizing the mayor to make the subscription, and providing for the execution and delivery of the bonds and coupons.

The defendant interposed six pleas. 1. The general issue.

2. That the bonds were issued without authority of law. 3. That the common council of the city did not, at any time prior to the issue of the bonds, order an election to be held for the purpose of submitting to the qualified voters the question whether or not the subscription should be made, as provided by law. 4. That the city council did not on June 4, 1853, make such an order, submitting such question to the legal voters at an election to be held at the usual place of holding elections in said city, July 13, 1853. 5. That the thirty days' notice of the election was not given. 6. That no election was held prior to the issue of the bonds, at which a majority of the qualified voters — taking as a standard the number of votes cast at the last general election prior thereto — voted for such subscription, as stated in the ordinance referred to in the bonds, and printed on the back of each of them.

The plaintiff demurred to the second, third, fourth, and fifth pleas, and the demurrer was sustained. There was neither a replication nor a demurrer to the sixth plea.

The case was tried by the court without a jury, and judgment rendered for the plaintiff, whereupon the city sued out this writ of error.

Mr. J. B. Henderson for the plaintiff in error.

No counsel appeared for the defendant in error.

MR. CHIEF JUSTICE WAITE delivered the opinion of the court.

By a statute of Illinois "in regard to practice in courts of record," passed Feb. 22, 1872, the plaintiff in a suit upon a written instrument is required to file with his declaration a copy of the instrument sued upon. Rev. Stat. Ill. (1874), c. 110, p. 777, sect. 18. In obedience to this statute, the plaintiff in this case filed with his declaration copies of the bonds and coupons declared upon. In this way, we think, the bonds became a part of the pleadings in the case.

The bonds upon their face refer to the ordinance of the city council authorizing their issue, printed on the back; and in the ordinance it is distinctly recited that the election required by law was held pursuant to notice given in accordance with the

provisions of the act authorizing a subscription, and that upon a canvass of the votes "it appeared that there had been cast for subscription a large majority of the votes of said city, the number of votes given being a large majority of all the votes polled at the last general election in said city, and a much larger vote than that required by the act aforesaid to authorize said subscription." With this recital, in effect, upon the face of the bonds in the hands of an innocent holder, it was certainly not error in the court below to sustain a demurrer to the second, third, fourth, and fifth pleas, which simply tendered an issue as to the authority of the city to issue the bonds, and as to the fact of the election.

The record does not show that there was either a demurrer or replication to the sixth plea. In *Laber* v. *Cooper* (7 Wall. 565), we held that such an objection came too late after a trial and verdict below as if the pleadings had been perfect in form.

Judgment affirmed.

ERWIN v. UNITED STATES.

1. Where cotton was captured by the military forces of the United States and sold, and the proceeds were paid into the treasury, the claim of the owner against the government constitutes property, and passes to his assignee in bankruptcy, though, by reason of the bar arising from the lapse of time, it cannot be judicially enforced.
2. The act of Congress of Feb. 26, 1853 (10 Stat. 170), to prevent frauds upon the treasury of the United States, applies only to cases of voluntary assignment of demands against the government. The passing of claims to heirs, devisees, or assignees in bankruptcy is not within the evil at which it aimed.

APPEAL from the Court of Claims.

In January, 1873, the appellant brought suit in the Court of Claims, under the Captured and Abandoned Property Act, to recover the proceeds of two hundred and eighty-three bales of cotton, alleged to have belonged to him, and to have been seized and taken from his possession in Savannah, in February, 1865, by the military forces of the United States, and to have been sold by the agent of the Treasury Department, and

the proceeds paid into the treasury. After issue had been joined in the suit, and evidence on behalf of the claimant had been taken, but before a hearing was had, *Haycraft* v. *United States* (22 Wall. 81) was decided by this court; in which it was held that the Court of Claims had no jurisdiction to hear and determine any claim arising under the provisions of that act, unless suit upon the same was commenced within two years after the suppression of the rebellion. It had been previously decided that, within the meaning of the act, the rebellion was to be considered as suppressed throughout the whole of the United States on the 20th of August, 1866, the day on which the President, by his proclamation, had declared it suppressed in Texas, the last of the States in insurrection. *United States* v. *Anderson*, 9 Wall. 56.

Upon learning of the decision mentioned, the appellant petitioned Congress for relief; and, in compliance with his petition, a statute was passed, which became a law in February, 1877, authorizing the Court of Claims to take jurisdiction of his claims under the Captured and Abandoned Property Act; "which claims," said the statute, "were, by accident or mistake of his agent or attorney, and without fault or neglect on his part, as is claimed, not filed within the time limited by said act." 19 Stat. 509.

After its passage, the appellant filed in the Court of Claims an amended petition, setting forth the act, and averring that Congress intended by it to confer upon the court jurisdiction to hear and determine his claims, as stated in his original petition.

It appears from the findings of the Court of Claims that in December, 1864, the appellant was possessed of the cotton described in his petition; that it was taken from his possession by the military forces of the United States and sold, and the proceeds thereof paid into the treasury; that in December, 1868, he was a member of the firm of Erwin & Hardee, of Savannah; that during this month that firm became insolvent, and presented a petition in bankruptcy to the District Court in Georgia; that in due course of proceedings the partners were adjudged bankrupts; that an assignee of their estate was appointed, and that their property was passed to the assignee. The schedule

of the individual property of the appellant annexed to the petition set forth among his assets "a claim on the United States government for three hundred and eighty-two bales of cotton, captured by General Sherman, in Savannah, in December, 1864." In March, 1872, the assignee presented a petition to the judge of the District Court, stating that he had in his possession a great many outstanding debts and demands belonging to the estate of the bankrupts, which could not be collected without inconvenient delay, and praying for leave to sell at auction certain notes and accounts mentioned, among which was this item: "All uncollected open accounts on the books." The court gave the assignee leave to sell at auction "such notes, accounts, and other debts" due to the estate as in his judgment would be for the interest of the creditors of the bankrupts; but as he and the creditors afterwards came to the conclusion that the property, if sold as proposed, would bring a mere nominal amount, no such sale was made, and in December, 1872, he accepted an offer of $2,500, made by the appellant, for the assets, exclusive of the notes of one Henry Schaben. The assets, with that exception, were accordingly sold to him, and a memorandum given to him by the assignee, acknowledging the receipt of the money "in full for all the remaining assets of the late firm of Erwin & Hardee." It also appears from the findings that the copy of the bankrupts' schedules, prepared by the register in bankruptcy for the use of the assignee, contained a sheet setting forth as an asset the claim mentioned against the United States for three hundred and eighty-two bales of cotton; but that the sheet was removed by some person unknown, and that the assignee had no personal knowledge that such an asset existed when he made this sale to the appellant.

The Court of Claims dismissed the petition, and from its decision Erwin appealed to this court.

Mr. John J. Weed and *Mr. Enoch Totten* for the appellant.
Mr. Assistant-Attorney-General Smith, contra.

MR. JUSTICE FIELD, after stating the case, delivered the opinion of the court.

The purpose of the statute passed for the relief of the appel-

lant, as is manifest on its face, was to remove the bar of the Captured and Abandoned Property Act, which had arisen without his fault, or rather to confer jurisdiction upon the Court of Claims over his case, which otherwise would not have existed. It was not intended to enlarge or affect his title to the claim, or to change his position in court from what it would have been had he instituted his suit within the two years prescribed by that act. His claim must, therefore, be considered like the claims of other suitors, both with respect to its original validity as a demand against the government and with respect to his title. If the proof fail in either of these particulars, no recovery can be had.

There is no question made as to the appellant's ownership of the cotton at the time of its seizure, or as to its proceeds being in the treasury of the United States; nor is any point raised against his status in court from his former connection with the rebellion as an officer in the Confederate army, the disability thus created having been removed by the President's proclamation of pardon and amnesty.

The point in dispute relates to the validity of his title. His contention is, 1st, that his claim against the United States for the proceeds of the cotton never passed to the assignee in bankruptcy; and, 2d, that if it did thus pass, he afterwards became the owner of it by purchase of the assets at the sale mentioned.

Upon the first point, the argument of the appellant is substantially this: That the claim, at the time the petition in bankruptcy was filed, did not constitute an enforceable demand against the government, and was not, therefore, in its nature assignable property; and that if the claim constituted a demand against the government in the nature of property, it was incapable of assignment, under the act of Congress of Feb. 26, 1858 (10 Stat. 170), and the decision of this court in *United States* v. *Gillis*, 95 U. S. 407; and that in either view the appellant stands in his original position before proceedings in bankruptcy were instituted, with his rights or equities respecting such claim unaffected by them.

This argument is unsound. When the appellant filed his petition in bankruptcy, his claim against the government was property, though of uncertain value. It was a claim for the pro-

ceeds of goods which once belonged to him, and of the possession of which he has been deprived by the action of the government. Whether this was done rightfully or wrongfully does not affect the character of the claim as property, though it may affect its validity and value. Claims for compensation for the possession, use, or appropriation of tangible property constitute personal estate equally with the property out of which they grow, although the validity of such claims may be denied, and their value may depend upon the uncertainties of litigation, or the doubtful result of an appeal to the legislature. A demand of a bankrupt, which is outlawed, must go to the assignee; for contingencies may arise in many ways which will give value to it. Demands against the government, if based upon considerations which would be valid between individuals, such as services rendered or goods taken, are property, although there be no court to investigate and pass upon their validity, and their recognition and payment may depend upon the caprice or favor of the legislature.

In *Comegys* v. *Vasse*, reported in 1 Peters, this court said, speaking through Mr. Justice Story, that it might, in general, be affirmed that vested rights *ad rem* and *in re*, possibilities coupled with an interest, and claims growing out of and adhering to property, will pass by assignment; and it was there held that a claim against the Spanish government, by a bankrupt, for damages arising from the capture of vessels and cargoes, of which he was the underwriter, and which were abandoned to him, passed to his assignee in bankruptcy. "The right," said the court, "to indemnity for an unjust capture, whether against the captors or the sovereign, whether remediable in his own courts, or by his own extraordinary interposition and grants upon private petition, or upon public negotiation, is a right attached to the ownership of the property itself, and passes by cession to the use of the ultimate sufferer;" and is in its nature capable of assignment to others. The Bankrupt Act of 1800, under which the case arose, provided that "all the estate, real and personal, of every nature and description, to which the bankrupt might be entitled, either in law or equity," should go to his assignee; and the court held that the words were broad enough to cover every description of

vested right and interest attached to and growing out of property; that under them the whole property of a testator would pass to his devisee, and whatever an administrator could take in case of intestacy would go to him. The language of the act under which the appellant here filed his petition in bankruptcy is equally comprehensive as to the property of a bankrupt which shall go to his assignee. It declares that all his estate, real and personal, and all his rights in equity and choses in action, shall vest in the assignee; and these terms are broad enough to embrace any claim the party may have against the government for property taken belonging to him. Rev. Stat., sects. 5044, 5046.

The act of Congress of Feb. 26, 1853, to prevent frauds upon the treasury of the United States, which was the subject of consideration in the *Gillis Case*, applies only to cases of voluntary assignment of demands against the government. It does not embrace cases where there has been a transfer of title by operation of law. The passing of claims to heirs, devisees, or assignees in bankruptcy are not within the evil at which the statute aimed; nor does the construction given by this court deny to such parties a standing in the Court of Claims.

Upon the second point, that the claim in controversy was purchased by the appellant at the private sale of the assignee, we think the evidence insufficient. It appears from the copy of the schedules of the bankrupts' property, prepared by the register for the use of the assignee, that the sheet showing the claim against the United States for three hundred and eighty-two bales of cotton had, in some unexplained way, been removed, so that he had no knowledge of the existence of the claim when he sold the remaining assets to the appellant. The receipt given by him shows that he considered that he was selling the assets of the firm only, and not of either of the separate partners. We are clear that it was not his intention to sell the claim against the government. There was a want of concurrence of minds to any such transaction, which was essential to give it validity.

Judgment affirmed.

KIHLBERG v. UNITED STATES.

A contract between the United States and A., for the transportation by him of stores between certain points, provided that the distance should be "ascertained and fixed by the chief quartermaster," and that A. should be paid for the full quantity of stores delivered by him. Annexed to the contract, and signed by the parties, was a tabular statement fixing the sum to be paid for each one hundred pounds of stores transported. The distance, as ascertained and fixed by the chief quartermaster, was less than by air line, or by the usual and customary route. *Held*, 1. That his action is, in the absence of fraud, or such gross mistake as would necessarily imply bad faith, or a failure to exercise an honest judgment, conclusive upon the parties. 2. That A. was not entitled to compensation, according to the number of pounds received for transportation, in all cases where the loss in weight, occurring during transportation, was without neglect upon his part, but only for the number of pounds actually delivered by him.

APPEAL from the Court of Claims.

This is an appeal by Kihlberg from the judgment of the Court of Claims, in a suit upon a contract made Jan. 31, 1870, between the United States and him, for his transportation of military, Indian, and government stores and supplies from points on the Kansas Pacific Railway to posts, depots, and stations in portions of Kansas, Colorado, Texas, Indian Territory, and New Mexico, and to such other depots as might thereafter be designated within the States and Territories named.

The following are portions of the contract the construction of which is involved in this suit:—

"ART. 2. That the said Kihlberg agrees and binds himself . . . to transport, under this agreement, from and to the posts, depots, or stations named in art. 1, or from and to any other posts, depots, or stations that may be established within the district described in said article, any number of pounds of military, Indian, and government stores and supplies, from and between one hundred thousand pounds and ten millions of pounds in the aggregate.

. . . . . .

"ART. 5. The military, Indian, and government stores and supplies which shall be transported under this agreement shall be consigned to their respective destinations, and receipts on bills of lading shall be given by the officer of the quartermaster's department serving at the place of consignment, for the full quantity of stores that shall

be delivered, and upon such receipts payments shall be made to the said Kihlberg, as hereinafter provided.

. . . . . .

"ART. 7. . . . Upon the arrival of the train at the place of destination or delivery, the officer of the quartermaster's department at the point of delivery shall indorse the bill of lading in accordance with the finding of a board of survey, as hereinafter provided, stating the quality and condition of the stores delivered, upon which indorsement payment shall be made as per contract, deducting the amount of any payment or payments previously made, and also for any articles missing, lost, destroyed, or damaged, and which the board of survey may find to be properly chargeable to the contractor, at the rate specified in art. 8 of this agreement.

"ART. 8. In all cases when stores have been transported by the said Kihlberg under this agreement, a board of survey, to be applied for in writing by the contractor or his agent (one member of which board shall be, if practicable, an officer on duty in the subsistence department), shall be called without delay, on their arrival at the point of destination or delivery, to examine the quantity and condition of the stores transported, and in cases of loss, deficiency, or damage, to investigate the facts and report the apparent causes, assess the amount of loss, deficiency, or damage, and state whether it was attributable to neglect or want of proper care on the part of the contractor or to causes beyond his control, and these proceedings, a copy of which shall be furnished to the contractor, shall be attached to the bill of lading, and shall govern the payments to be made on it.

"For loss of weight, due to shrinkage, and for leakage of vinegar, molasses, or other liquids, the contractor shall not be held liable if the packages are delivered in good order and condition, and the board of survey shall be satisfied that such shrinkage or leakage did not arise from neglect or want of care on the part of the contractor or his agent. For loss, deficiency, or damage, attributable to the contractor, he shall pay double the cost at the point where he receives the articles, which cost shall be determined by taking the cost price at place of purchase and adding thereto the cost of transportation to the point where the stores were turned over to the contractor; and no freight whatever shall be paid on stores deficient. In case of damage, freight shall be deducted in proportion to the quantity damaged. Should no board of survey be called when requested by the contractor, through failure on the part of the quartermaster's department or other military authority to have one convened, it shall be considered that the contractor has delivered

all the stores as specified in the bill of lading in good order and condition, and he shall be paid accordingly. But before such payment is made, the fact must be shown that the contractor or his agent did make application in writing to the quartermaster for a board of survey. If the amount of loss, deficiency, or damage exceeds the value of the bill of lading, it shall be deducted from any after payment that may become due.

"Transportation to be paid in all cases according to the distance from the place of departure to that of delivery, the distance to be ascertained and fixed by the chief quartermaster of the district of New Mexico, and in no case to exceed the distance by the usual and customary route. Where, however, stores are taken from trains before reaching their destination by competent military authority, the contractor will be allowed an increase of pay of five per cent on contract rates to points of actual delivery; *Provided*, that in no case more than the regular rates for the whole distance are paid.

. . . . . .

"ART. 17. For and in consideration of the faithful performance of the stipulations of this agreement, the said Kihlberg shall be paid at the office of the depot quartermaster at Fort Leavenworth, Kansas, in the legal currency of the United States, according to the distance supplies are transported, and agreeably to the rates specified in the tabular statement hereunto annexed, signed by the parties to this agreement."

General Easton, on the 16th of June, 1870, issued an order addressed to the depot quartermaster at Fort Leavenworth, Kansas, stating the distances by which he was to be governed in making settlements under the contract. The distances thus given were less than by air line, or by the usual and customary route.

There was a further contention in the case as to whether the contractor was entitled, under the contract, to compensation according to the weight of the supplies when received for transportation, or their weight when delivered.

The Court of Claims held that the contractor was bound by the distances named by the chief quartermaster, and was not entitled to compensation except upon the basis of the number of pounds actually delivered.

Mr. Harvey Spalding for the appellant.

The Solicitor-General, contra.

MR. JUSTICE HARLAN delivered the opinion of the court.

The contract which is the foundation of this action provides that transportation shall be paid "in all cases according to the distance from the place of departure to that of delivery." But no specific rule is prescribed for the ascertainment of distances. The contract is silent as to whether they shall be estimated by an air line, or by the route usually travelled by contractors in conveying government stores, or by the road over which troops ordinarily marched when going from one post or station to another. The parties, however, concurred in designating a particular person — the chief quartermaster of the district of New Mexico — with power not simply to ascertain, but to fix, the distances which should govern in the settlement of the contractor's accounts for transportation. The written order of General Easton to the depot quartermaster at Fort Leavenworth was an exertion of that power. He discharged a duty imposed upon him by the mutual assent of the parties. The terms by which the power was conferred and the duty imposed are clear and precise, leaving no room for doubt as to the intention of the contracting parties. They seem to be susceptible of no other interpretation than that the action of the chief quartermaster, in the matter of distances, was intended to be conclusive. There is neither allegation nor proof of fraud or bad faith upon his part. The difference between his estimate of distances and the distances by air line, or by the road usually travelled, is not so material as to justify the inference that he did not exercise the authority given him with an honest purpose to carry out the real intention of the parties, as collected from their agreement. His action cannot, therefore, be subjected to the revisory power of the courts without doing violence to the plain words of the contract. Indeed, it is not at all certain that the government would have given its assent to any contract which did not confer upon one of its officers the authority in question. If the contract had not provided distinctly, and in advance of any services performed under it, for the ascertainment of distances upon which transportation was to be paid, disputes might have constantly arisen between the contractor and the government, resulting in vexatious and expensive and, to the contractor oftentimes, ruinous litigation.

Hence the provision we have been considering. Be this supposition as it may, it is sufficient that the parties expressly agreed that distances should be ascertained and fixed by the chief quartermaster, and in the absence of fraud or such gross mistake as would necessarily imply bad faith, or a failure to exercise an honest judgment, his action in the premises is conclusive upon the appellant as well as upon the government. The contract being free from ambiguity, no exposition is allowable contrary to the express words of the instrument.

The tabular statement of rates appended to the contract, and attested by the signatures of the parties, shows that the appellant was to be paid for the transportation of supplies by the pound. The appellant claims that he was entitled to compensation according to the number of pounds received for transportation, in all cases where the loss in weight, occurring during transportation, was without neglect upon his part. The government contends that the quantity delivered determined the amount of compensation. We are of opinion that the latter is the better construction of the contract. By the fifth article of the agreement, it is made the duty of the quartermaster, at the place of delivery, to give to the contractor receipts on the bill of lading "for the full quantity of stores that shall be delivered, and, upon such receipts, payment shall be made." By the eighth article, provision is made for a board of survey, if requested by the contractor, "to examine the quantity and condition of stores transported, and in cases of loss, deficiency, or damage, to investigate the facts, report the apparent causes, assess the amount of loss, deficiency, or damage, and state whether it was attributable to neglect or want of proper care on the part of the contractor, or to causes beyond his control; and these proceedings, a copy of which shall be furnished to the contractor, shall be attached to the bill of lading, and shall govern the payments to be made on it." The previous article makes it the duty of the quartermaster at the point of delivery to "indorse the bill of lading, in accordance with the finding of a board of survey, . . . stating the quantity and condition of stores delivered; upon which indorsement payment shall be made as per contract," deducting the value of articles missing, lost, destroyed, or damaged, by neglect of the

contractor, if the board of survey has found that there was such neglect. The contract further exempts the appellant from responsibility for loss of weight due to shrinkage, and for leakage of liquids, where the same has not occurred from his neglect. These provisions, taken together, show that while the contractor is not to be charged for the value of any loss, deficiency, or damage which, without his fault, occurred during transportation, the government agreed to pay him transportation at a fixed rate per pound, according to the weight of supplies when delivered at the place of destination. There are other portions of the contract, not referred to in the briefs of counsel, which seem to fortify this conclusion. In the eighth article, after providing that the contractor shall pay double the cost at the point of departure of articles in reference to which there was "a loss, deficiency, or damage," attributable to him, the contract declares: "and no freight whatever shall be paid on stores deficient." If in the progress of transportation the stores were reduced in weight, by reason of shrinkage or leakage, there would seem to be a deficiency in stores, within the meaning of the contract, for which deficiency no freight could be charged. The contractor took care to guard against responsibility for loss of weight, arising from causes beyond his control, but failed to stipulate for payment of transportation beyond the quantity or weight of supplies at the place of destination. The language employed indicates an understanding between the parties that the payment of transportation was to be regulated by the weight actually delivered, not by the weight received for delivery.

The views expressed lead to an affirmance of the judgment; and it is

So ordered.

FOUR PACKAGES v. UNITED STATES.

1. On the arrival of the steamship "Hansa" at her pier or dock at Hoboken, N. J., certain packages were, without a permit or the knowledge of the customs inspectors, unladen by her officers as the baggage of steerage passengers. The customs officers having there examined the packages, and found them to contain articles subject to duty, so marked them for identification, and sent them to Castle Garden, New York City, for further examination. Upon such further examination at that place, and the failure to pay the duties, the packages were sent to the seizure-room at the custom-house. *Held*, that the seizure was made at Castle Garden, and not on the pier or dock at Hoboken.
2. It being fully proved that the packages were so unladen, the court below did not err in directing a verdict condemning them for a violation of the fiftieth section of the act of March 2, 1799 (1 Stat. 665).

ERROR to the Circuit Court of the United States for the Southern District of New York.

This was an information filed by the United States in the District Court, May 8, 1873, for the condemnation and forfeiture of four packages, seized by the collector of customs for the port of New York as the property of Hugo Seitz and Carl Breidbach, composing the firm of Hugo Seitz & Co., for a violation of sects. 24, 46, and 50 of the act of Congress approved March 2, 1799 (1 Stat. 627), entitled "An Act to regulate the collection of duties on imports and tonnage," and sect. 4 of the act of July 18, 1866 (14 id. 178), entitled "An Act further to prevent smuggling, and for other purposes." The first count of the information alleges that on April 25, 1873, the collector of the port of New York "seized on land the property described as four packages containing human hair and other articles, which he now has within said Southern District of New York, as forfeited to the United States," having been unladen and delivered from the steamship "Hansa," "within said port and collection district, without a permit from the collector and naval officer for such unlading or delivery," contrary to the fiftieth section of the act of March 2, 1799.

To maintain the issue on its part, the United States introduced evidence to show that the "Hansa" arrived at New York from Bremen, April 23, 1873, and that the claimants came in

her as steerage passengers, and brought with them the said packages; that on her arrival she proceeded to her dock or pier at Hoboken, N. J., and commenced landing her passengers and their baggage on the dock; that two inspectors, specially detailed by the collector of customs for the port of New York for the examination of the baggage of steerage passengers, found said packages on the dock, they having been there unladen and delivered from said vessel, and claimed by the claimants as their property; that Seitz and Breidbach went to Germany in March, 1873, having in contemplation the establishment, on their return, of a partnership in the business of hair-dressing and the manufacture and sale of switches; that the human hair found in said packages was purchased in Germany for use in the manufacture of said switches, and that the other articles were fancy goods bought for and at the request of the father of Briedbach, who was a dealer therein in New York, and were intended to be delivered to him for sale. It was also proved that said packages were produced to the officers of the "Hansa" by the claimants, on engaging passage, as their baggage, and that they, with the baggage of other steerage passengers in said vessel, were put upon the dock at Hoboken by her officers, without any knowledge on their part of the contents thereof; that said packages having been subsequently examined on the pier by the inspectors, and found to contain dutiable articles, were so marked, in order to identify them at Castle Garden, where the proper officers were detailed for the purpose of collecting the duty, the baggage of steerage passengers being landed or delivered at that place, and the duties never being paid or collected on the pier at Hoboken; it was also proved that neither of said packages nor its contents was entered upon the manifest of the "Hansa," and that no permit or document in the nature of a permit, either in terms or legal effect, for the unlading or delivery of said packages or their contents had been granted by the collector of the port of New York; and that said packages having been sent to Castle Garden, were there seized and sent to the seizure-room at the custom-house in the city of New York. There was also evidence tending to show that the claimants imported said merchandise with the intent to secure its landing and

delivery without paying the lawful duties thereon. The claimants thereupon offered in evidence the following papers as and for permits for the unlading and delivery of their goods: —

"CUSTOM HOUSE,
"NEW YORK, April 19, 1873.

"The inspector on board the steamer 'Hansa,' from Bremen, will examine the baggage of all the passengers, and if nothing be found but personal baggage, permit the same to be landed, and send all other articles not permitted, in due time, to the public store, 119 Greenwich Street and 24 Trinity Place.

THO'S G. BAKER, *Dep. Collector.*

"E. MANNING, *Naval Officer.*"

"*General Order.*

"CUSTOM HOUSE, PORT OF NEW YORK,
"COLLECTOR'S OFFICE, April 24, 1873.

"The inspector on board the German steamship 'Hansa,' Brickenshime, master, from Bremen *via* Southampton, will send to the public store, No. Hoboken, all packages, when landed, and for which no permit or order shall have been received by him contrary to this direction, except perishable articles, gunpowder, new hides, explosive substances not permitted for consumption, which you will retain on board, and send notice of to this office. The usual weighing, gauging, and measuring to be done before sending goods under this order.

"R. WYNKOOP, *Dep. Collector.*

"J. N. P., Hoboken."

The plaintiff admitted that said papers came from the official records of the office of the collector of the port of New York, but claiming that they were issued in connection with the landing of passengers and their baggage on the arrival of the "Hansa," and not as the permits required by law for unlading or delivering the goods, wares, and merchandise in suit, objected to their admission in evidence. The court sustained the objection and excluded the papers, whereupon the claimants excepted. The claimants also gave evidence tending to show their innocence of any intent to secure the unlading or delivery of the goods without paying the duties thereon. They thereupon requested the court to charge the

jury to find for them on the ground that no seizure of the goods in question had been proved within the jurisdiction of the court; but the court declined so to charge, and the claimants excepted. The court thereupon directed the jury to return a verdict of condemnation of the goods, wares, and merchandise, in that the same were unladen and delivered from the "Hansa" without a permit, contrary to the fiftieth section of the act of March 2, 1799. The claimants requested the court to charge the jury that the plaintiff could not recover under the fiftieth section of the act of 1799; that no law of the United States forbids steerage passengers from bringing dutiable articles to this country with their personal effects as baggage, and that there is no law for forfeiting goods so brought; that the goods in question were not landed without a permit; that, having been landed under the direction and supervision of the officers of the customs, or under a baggage or general order permit, they were not forfeited under the fiftieth section of the act of 1799; that upon the facts in the case the claimants did not land the goods; and that in the absence of fraudulent intent on their part in the importation of the goods the government could not recover.

The court refused so to charge, and also to submit to the jury as questions of fact whether the goods had been landed without a permit in violation of said fiftieth section, or whether they were imported contrary to law.

The jury thereupon returned a verdict condemning the goods, and judgment of forfeiture was entered thereon; and that judgment having been affirmed by the Circuit Court, the claimants then brought the case here.

Mr. S. G. Clarke for the claimants.

The information is defective in not alleging a seizure on land within the Southern District of New York, and is not cured by the allegation that the collector "now has them within the district."

Non constat, but that the seizure was in New Jersey, and the goods then brought within the district.

This is a jurisdictional fact, and necessary to be averred and proved. Act of 1789, sect. 9, 1 Stat. 77; *Keene* v. *United States*, 5 Cranch, 304; Act of March 2, 1799, sect. 89; *The Washington*, 4 Blatchf. 101; *The Fideleter*, 1 Abb. (U. S.) 577.

Where the jurisdiction does not appear on the face of the record, it may be taken advantage of in arrest of judgment or on error. *Donaldson* v. *Hogen*, Hemp. 423; *The Washington*, *supra*.

The evidence shows that, in point of fact, the seizure was made in the district of New Jersey. It was there that the customs officers took charge of the goods, and deprived the claimants of their possession. It is said, however, that having given a stipulation for the value of the goods proceeded against, we have admitted the jurisdiction of the court.

But consent cannot give jurisdiction to the Federal courts. *Bobyshall* v. *Oppenheimer*, 4 Wash. 482; *Dred Scott* v. *Sandford*, 19 How. 393. Or to any court of limited jurisdiction, proceeding *in rem*. *The Montague*, 4 Blatchf. 461; *United States* v. *Shares of Stock*, 5 id. 231; *United States* v. *Ninety-two Barrels*, 8 id. 480.

The proceedings being *in rem*, they are void, if it appears that the court is without jurisdiction.

The taking of the stipulation was as much a void act as any thing else, unless the seizure was made in the district; the court had no jurisdiction to do any thing.

As soon as the want of jurisdiction appeared, proceedings should have been stayed. *Fisk* v. *Union Pacific Railroad*, 6 Blatchf. 362; *Rhode Island* v. *Massachusetts*, 12 Pet. 657.

The evidence offered and excluded was competent to show a sufficient permit for placing the packages upon the dock. *United States* v. *Ninety-five Boxes*, 19 Int. Rev. Rec. 101.

The goods were not unladen and delivered from the steamship without a permit. *United States* v. *Ninety-five Boxes*, *supra*; *Caldwell* v. *United States*, 8 How. 366.

If the placing of the packages on the dock with all the other baggage on board the steamship for examination did not forfeit them, then it is clear that they are not forfeited under the first count of the information. *Six Hundred and Fifty-one Chests of Tea* v. *United States*, 1 Paine, 499; *Peisch* v. *Ware*, 4 Cranch, 347.

The fact that the goods were merchandise and not personal effects can have no bearing upon this question of landing without permit. The penalty of forfeiture is imposed upon goods

as well as merchandise, and the personal effects are certainly goods; the fact that they might not be dutiable makes no difference. *The Elizabeth*, 2 Mason, 407.

Therefore, if these packages were forfeited by being put over the side of the vessel, so were all the trunks which came over in the same manner, and likewise the vessel herself.

Mr. Assistant-Attorney-General Smith, contra.

MR. JUSTICE CLIFFORD delivered the opinion of the court.

Goods imported in any ship or vessel from any foreign port or place are required by the act of Congress to be landed in open day, and the express provision is, that none such shall be landed or delivered from such ship or vessel without a permit from the collector and naval officer, if any, for such unlading and delivery. 1 Stat. 665; Gen. Reg. (1857), 145.

Persons violating that regulation are subjected to penalties; and the further provision is, that all goods, wares, and merchandise so unladen or delivered shall become forfeited, and may be seized by any of the officers of the customs.

Four imported packages containing human hair and other dutiable articles were seized on land by the collector; and the information alleges that the goods were brought into the port of New York in the steamer therein named, from a foreign port, and that the four packages were unladen and delivered from the steamer in which they were imported into the port without a permit from the collector and naval officer for such unlading and delivery. Seasonable appearance was entered by the claimants, and they pleaded the general issue, that the goods did not become forfeited as alleged, which was duly joined.

Pursuant to the issue between the parties, they went to trial before the district judge and a jury. Evidence to prove the allegations of the information was introduced by the district attorney, showing that the steamer arrived at the port from a foreign port at the time alleged, and that the claimants then and there came in the vessel as steerage passengers, and that they brought with them the said four packages containing the described goods; that on the arrival of the steamer within the port she proceeded to the dock or pier at Hoboken, N. J.,

owned by the Bremen line of steamships, to which she belonged, and commenced the landing of her passengers and their baggage on the dock; that two inspectors of customs, especially detailed by the collector of the port for the examination of the baggage of the steerage passengers, in the execution of their duty found the said four packages upon the said dock, the same having, without the knowledge of the inspectors, been there unladen and delivered on said dock from the vessel by the officers of the vessel or their employés, and having been then and there claimed by the claimants as their property; that the said four packages were each in a wooden box or case similar to boxes or cases used for the package of merchandise, with a cover connected therewith by hinges; that in each box were some articles of wearing-apparel and other personal effects not dutiable, but there was besides such articles a large quantity of dutiable merchandise.

Testimony was also introduced which showed that the claimants, being residents and in business in New York City, went together from there to Germany the month previous; that they then had in contemplation, on their return, the establishment of a partnership with each other to carry on the business of hairdressing and the manufacturing of switches, and that the father of the junior partner is a dealer in fancy goods in New York City; that the human hair found in the packages was purchased in Germany to be used in the manufacture of switches for sale; and that the residue of the merchandise contained in the packages was fancy goods bought for and at the request of the father of the said junior partner, to be brought and delivered to him for sale in his said business.

Proof was also introduced by the district attorney showing that the packages were produced to the officers of the steamer by the claimants when they engaged their passage, as their baggage, and that the packages were unladen by the officers of the steamer and put upon the dock at the place of landing as such, without knowledge of their contents by the officers, with other baggage of the steerage passengers.

Two of the packages were opened and examined at the place where they were unladen; and it being found that each contained dutiable goods not on the manifest, the inspectors placed

upon each of the four packages the usual marks to show that they had not been passed, but were to be sent to Castle Garden for further inspection and for the collection of the duties to which the same were subject; that no permit or document in the nature of a permit, either in terms or legal effect, for the unlading or delivery of the goods had been granted by the collector and naval officer of the port, otherwise than as set forth in the two exhibits offered in evidence by the claimants.

Those two exhibits were offered in evidence by the claimants as the permits required by law for the unlading and delivery of the four packages in question; but the district attorney objected to the admission of the same as not being the permits which the act of Congress requires in such a case; and the court sustained the objection and excluded the same, to which ruling the claimants excepted. Exceptions were also taken to the charge of the court. The verdict and judgment were for the plaintiffs; and the defendants sued out a writ of error and removed the cause into the Circuit Court, where the judgment of the District Court was affirmed. Though defeated in both of the subordinate courts, the respondents removed the cause into this court by the present writ of error.

Three principal errors were assigned, which will be separately considered: 1. That the seizure of the goods in question was not made at a port within the jurisdiction of the District Court. 2. That the court erred in refusing to admit in evidence the exhibits offered by the claimants as permits for the unlading and delivery of the goods. 3. That the court erred in directing the jury to find a verdict in favor of the plaintiffs.

Much discussion of the first assignment of error is unnecessary, as it is clear that the seizure of the four packages was made at Castle Garden, where the goods were sent by the inspectors present on the wharf, for final examination. Sufficient appears to show that the duties in such cases are never collected on the wharf; that the examination made is only for the purpose of passing the baggage which does not contain any dutiable articles, and that the baggage which does contain dutiable goods is uniformly sent to Castle Garden for the collection of the duties, or to be dealt with as the law directs. Suffice it to say that no seizure was made on the wharf where the goods

were landed, and that the proceeding in sending the goods to the place where the seizure was made was in all respects correct and in accordance with the usage of the port. *The Propeller Commerce*, 1 Black, 574; 3 Greenl. Evid. (8th ed.), sect. 395; *The Slavers (Kate)*, 2 Wall. 350.

Due seizure was made in this case at Castle Garden, and consequently the first assignment of errors must be overruled.

Nor does the second assignment of error require any considerable examination, as it is too clear for argument that neither of the exhibits offered in evidence was a permit for landing and delivering any package which contained dutiable merchandise. Opposed to that is the suggestion of the respondents, that two of the inspectors were present on the wharf when the officers of the steamer unloaded the packages and placed them with the other baggage for examination; but it is wholly immaterial whether the inspectors were present or absent at the moment the packages were landed from the steamer, as it clearly appears that as soon as the inspectors discovered that the packages contained dutiable merchandise, they ordered the same to be sent to the proper place for further inspection.

Taken as a whole, the evidence fully proved that the packages were unladen and delivered without the permit required by the act of Congress; and inasmuch as there was no opposing testimony, the direction of the court to the jury to return a verdict for the plaintiffs was entirely correct. *Improvement Company* v. *Munson*, 14 Wall. 442; *Ryder* v. *Wombwell*, Law Rep. 4 Ex. 39; Law Rep. 2 P. C. 285.

Repeated requests for instruction were presented by the respondents, all of which were refused. Some of the rulings of the court in refusing these requests are also assigned for error, but it is wholly unnecessary to examine those assignments, as the instructions given disposed of the case.

Judgment affirmed.

UNITED STATES v. MORA.

1. The third section of the act of May 20, 1862 (12 Stat. 404), authorized the Secretary of the Treasury to require reasonable security that goods should not be transported in vessels to any place under insurrectionary control, nor in any way be used in giving aid or comfort to the enemy, and to establish such general regulations as he should deem necessary and proper to carry into effect the purposes of the act. *Held*, that a bond taken by the collector of the port of New York, under regulations established by the Secretary of the Treasury, from a shipper and two sureties, in double the value of the goods shipped, to prevent such transportation and use, comes within the reasonable security specified in said third section.
2. The right of the collector to refuse a clearance altogether included that to exact a bond. Such bond, when duly executed, is *prima facie* evidence that it was voluntarily entered into.
3. Where the conditions of a bond which are not sustainable are severable from those which are, the latter hold good *pro tanto*, and evidence to show a breach of them is admissible.

ERROR to the Circuit Court of the United States for the Southern District of New York.

This is a suit by the United States on a bond dated and executed March 4, 1863, exacted by the collector of the port of New York, as a condition precedent to granting a clearance to the vessel "Sarah Marsh," laden with a cargo of merchandise, bound to the port of Matamoras, in Mexico.

To support the issues on its part, the plaintiff proved that on the twenty-third day of May, 1862, the then Secretary of the Treasury had instructed the then collector of customs at the port of New York as follows: —

"TREASURY DEPARTMENT,
"WASHINGTON, D. C., May 23, 1862.

"SIR, — In pursuance of the provisions of the proclamation of the President modifying the blockade of the ports of Beaufort, Port Royal, and New Orleans, and of the regulations of the Secretary of the Treasury relating to trade with those ports, no articles contraband of war will be permitted to enter at either of said ports, and you will accordingly refuse clearance to vessels bound for those ports, or either of them, with any such articles on board.

"Until further instructed, you will regard as contraband of war the following articles; viz., cannons, mortars, fire-arms, pistols, bombs, grenades, fire-locks, flints, matches, powder, saltpetre, balls, bullets,

pikes, swords, sulphur, helmets, or boarding-caps, sword-belts, saddles and bridles (always excepting the quantity of the said articles which may be necessary for the defence of the ships and of those who compose the crew), cartridge-bag material, percussion and other caps, clothing adapted for uniforms, resin, sail-cloth of all kinds, hemp and cordage, masts, ship timber, tar and pitch, ardent spirits, military persons in the service of the enemy, despatches of the enemy, and articles of like character with those specially enumerated.

"You will also refuse clearance to all vessels which (whatever the ostensible destination) are believed by you, on satisfactory ground, to be intended for ports or places in possession or under control of insurgents against the United States; or that there is imminent danger that the goods, wares, and merchandise, of whatever description, laden on such vessels, will fall into the possession or under the control of such insurgents; and in all cases where, in your judgment, there is ground for apprehension that any goods, wares, or merchandise shipped at your port will be used in any way for the aid of the insurgents or the insurrection, you will require substantial security to be given that such goods, wares, or merchandise shall not be transported to any place under insurrectionary control, and shall not, in any way, be used to give aid or comfort to such insurgents.

"You will be especially careful, upon application for clearances, to require bonds with sufficient sureties, conditioned for fulfilling faithfully all the conditions imposed by law or departmental regulations from shippers of the following articles, to the ports opened, or to any other ports from which they may easily be, and are probably intended to be, reshipped in aid of the existing insurrection; namely, liquors of all kinds, coals, iron, lead, copper, tin, brass, telegraphic instruments, wires, porous caps, platina, sulphuric acid, zinc, and all other telegraphic materials, marine engines, screw propellers, paddle-wheels, cylinders, cranks, shafts, boilers, tubes for boilers, fire-bars, and every article, or any other component part of an engine or boiler, or any article whatever which is, can, or may become applicable for the manufacture of marine machinery, or for the armor of vessels.

"I am, &c., S. P. CHASE,
"*Sec'ty of the Treasury.*

"HIRAM BARNEY,
"*Coll. of N. York.*"

That the following bond was taken by the said collector of customs, as the condition upon which he had granted a clear-

ance to the "Sarah Marsh" to proceed from the port of New York to the port of Matamoras, in Mexico: —

"Know all men by these presents, that we, Leon Haas, Jr., as principal, and Foster Mora and W. M. Congreve, all residing and owning real estate in the city of New York, are held and firmly bound unto the United States of America in the sum of twenty-one thousand eighty-one $\frac{74}{100}$ ($21,081.74) dollars, lawful money of the United States of America, to be paid to the said United States of America or their assigns, for which payment, well and truly to be made, we bind ourselves, our heirs, executors, and administrators, firmly by these presents; sealed with our seals, dated the fourth day of March, one thousand eight hundred and sixty-three.

"Now, the condition of this obligation is such that if the ship or vessel called the 'Sarah Marsh,' laden with various packages of merchandise , value $10,540.87, enumerated in the shipper's manifest of said Leon Haas, Jr., shall proceed from the port of New York to Matamoras, in Mexico, and shall land the same at the last-mentioned port of Matamoras for consumption, and if the same shall be consumed within the republic of Mexico, and if the said shippers shall, within seven months from the date hereof, produce satisfactory proof to the collector of the port of New York, by consular certificate or otherwise, that the same has been landed and entered for consumption, and actually converted to domestic use, within the republic of Mexico, and the duties thereon paid, and if all laws and departmental regulations shall be strictly obeyed; and if all the conditions of the clearance of said merchandise shall be performed, and specially if said merchandise or any part thereof shall not be transported to any place under insurrectionary control, and if none of said merchandise shall be used in any way, with the consent or knowledge of the shippers or their agents, to give aid or comfort to parties now in rebellion against the United States, then this obligation to be void; otherwise to be and remain in full force and virtue."

The plaintiff having offered in evidence a partial manifest of the cargo of the "Sarah Marsh" relative to the goods represented by the bond, — which manifest showed the portion of the cargo in question to be of the value of $10,540.87, and also proved that she was a general ship, and that other parts of her cargo were owned by others than the principal and sureties on

the bond in question, — offered to prove that the "Sarah Marsh" proceeded out of the port of New York toward Matamoras, which was conceded by the defendant. The plaintiff then offered to prove that that part of her cargo referred to in the bond, and marked , value stated at $10,540.87, enumerated in the shipper's manifest of Leon Haas, Jr., was carried in her in March or April, 1863, to the mouth of the Rio Grande; that it was not landed at Matamoras for consumption, nor consumed within the republic of Mexico; that the shippers did not, within seven months from the date of said obligation, produce satisfactory proof to the collector of the port of New York, by consular certificate, or in any manner whatever, that said merchandise had been landed and entered for consumption and actually appropriated to domestic use within said republic, or that the duties thereon had been paid; that the laws and departmental regulations in respect to non-intercourse with portions of the United States in rebellion, and particularly in respect to Texas, were not strictly, or in any manner, obeyed in respect to said goods, and that none of the conditions of the clearance were performed, and especially that said merchandise, and large parts thereof, were transported by the principal in the bond, and by his authorized agents, directly to places under insurrectionary control, and were used with his consent and knowledge, and with the consent and knowledge of his agents, to give aid and comfort to parties then in rebellion against the United States, and specially that part of the cargo represented by the bond was sold to the military authorities of the so-called Confederate States in Brownsville, Texas, some time in the month of April, 1863; but the defendant objected, the objection was sustained, and the plaintiff excepted.

Upon motion of the defendant, the court then directed a verdict for the defendant, to which direction the plaintiff excepted.

Thereupon the jury rendered a verdict for the defendant, and the plaintiff sued out this writ.

The statutes bearing on the question of the collector's authority to require the bond are referred to in the opinion of the court.

Mr. Assistant-Attorney-General Smith for the plaintiff in error.

Under the act of May 20, 1862 (12 Stat. 404), the collector of the port of New York had not only authority to require a bond before granting the clearance, but to refuse a clearance altogether. *Bas* v. *Steele*, 3 Wash. 395; *Hickey* v. *Huse*, 56 Me. 496; *United States* v. *Eliason*, 16 Pet. 291; *United States* v. *Freeman*, 3 How. 556.

The bond in suit certainly falls within the "reasonable security" which, by the third section of that act, the Secretary of the Treasury can require, and it is justified by the regulations which that section authorized him to make. When made, those regulations had themselves the force of law. *Gratiot* v. *United States*, 4 How. 80.

The bond is governed by the rules of the common law. *Cox* v. *United States*, 6 Pet. 172. Given by the owner of the goods as his own obligation, and accepted by the collector as such, it was a voluntary undertaking, good and enforceable at law. *United States* v. *Hodson*, 10 Wall. 395; *Hamilton* v. *Dillin*, 21 id. 73; *United States* v. *Woollen Goods*, 1 Paine, 485, and cases cited.

A bond, although not in exact conformity with the statute, may be good at common law. Any part of it not required by statute may be rejected. *United States* v. *Tingey*, 5 Pet. 115; *Kavanagh* v. *Sanders*, 8 Me. 422.

Mr. F. R. Coudert, contra.

The bond sued on, being executed in double the amount of the value of the goods, was not authorized by the act of May 20, 1862. Even if the pleadings averred that it was taken under the regulations which the Secretary of the Treasury, by the third section of the act, authorized to make, and those regulations were admissible in evidence, they could not go beyond the provisions of the second section, authorizing the requirement of a bond from the master or owner of the vessel in a penalty equal to the value of the cargo, nor create a liability, nor impose a burden not contemplated by the law itself.

The bond sued on is in no sense a voluntary one. *Dickinson* v. *United States*, 1 Brock. 177; *Taber* v. *United States*,

1 Story, 1; *United States* v. *Gordon*, 7 Cranch, 287; *United States* v. *Morgan*, 3 Wash. 10.

Where a statute prescribes the condition of a bond, its provisions must be strictly complied with, or the bond will be void. *Barnard* v. *Viele*, 21 Wend. (N. Y.) 88. The bond in suit, being highly penal, must be strictly construed.

MR. JUSTICE BRADLEY delivered the opinion of the court.

We think the judgment in this case should be reversed. The objection that the bond does not correspond with the form prescribed by the second section of the act of May 20, 1862 (12 Stat. 404), does not meet the case. It is supported by the third section, if not by the second, in connection with the treasury circular issued under it May 23, 1862.

To understand the force of the objection and the answer to it, it is necessary to look at the general scope of the act.

The first section authorized the Secretary of the Treasury to refuse a clearance to any vessel or other vehicle laden with goods destined for a foreign or domestic port, whenever he should have satisfactory reason to believe that any of the goods, whatever their ostensible destination, were intended for parts or places in the possession or under the control of the insurgents. The second section empowered the collector of customs, in granting a clearance of any vessel for a foreign or domestic port, if he should deem it necessary, under the circumstances of the case, to require a bond from the master or owner of the vessel in a penalty equal to the value of the cargo, that the cargo should be delivered at its destination, and that no part of it should be used to aid any persons in insurrection. This authority given to the collector was independent of any instructions which he might receive from the Secretary, and in no sense conflicted with what the Secretary might do, or require to be done, under the other portions of the act.

The third section gave the Secretary of the Treasury discretionary power to prevent the transportation, in any way, of any goods, whatever their ostensible destination, in all cases where there should be satisfactory reason to believe that they were intended for any place in possession of the insurgents, or

that there was imminent danger of their falling into their possession or control; and also power, in all cases where he should deem it expedient, to require reasonable security that the goods should not be transported to any place under insurrectionary control, and should not in any way be used to give aid or comfort to the insurgents; and he was authorized to establish such general regulations as he should deem necessary and proper to carry into effect the purposes of the act.

The first and second sections related more particularly to clearances of vessels; and the third, to goods to be transported in vessels and other vehicles. The security specified in the second section was required to be given by the master or owner of the vessel, and, as already stated, was to be taken at the discretion of the collector, without further instructions on the subject. The security specified in the third section was not limited to any particular penalty, and it was not stated by whom it should be given. It was to be reasonable security, and would, as a matter of course, have to be furnished by the person who should desire to have the goods transported.

By virtue of the powers conferred by the third section, the Secretary of the Treasury issued instructions to the collector of New York to refuse clearances to all vessels (whatever their ostensible destination) which were believed by him, on satisfactory grounds, to be intended for ports or places in possession or under control of the insurgents; or where there was imminent danger that the goods laden therein should fall into the possession or under the control of the insurgents; and in all cases where, in his judgment, there was ground of apprehension that any goods shipped would be used in any way for the aid of the insurgents, the collector was directed to require substantial security that such goods should not be transported to any place under insurrectionary control, and should not in any way be used to give aid or comfort to the insurgents.

It cannot be pretended that the Secretary of the Treasury exceeded his authority in giving these instructions. They are fully authorized by the third section of the act. We are of opinion that the powers given to the collector by these instructions were sufficient to authorize him to take the bond in

question. It is in double the value of the goods, and is executed by the shipper and two sureties. It is not shown that this was any thing more than "reasonable security." It is conditioned that the vessel in which the goods were laden (which was bound for Matamoras) should proceed to that place, and should land the goods there for consumption; that the same should be consumed in the republic of Mexico; that the shippers should within seven months produce satisfactory proof to the collector, by consular certificate or otherwise, that the same had been landed and entered for consumption, and actually converted to domestic use, within the republic of Mexico, and the duties thereon paid; that all laws and departmental regulations should be strictly obeyed; that all the conditions of the clearance of said merchandise should be performed; and, specially, that no part of said merchandise should be transported to any place under insurrectionary control, and that none of it should be used in any way, with the consent or knowledge of the shippers or their agents, to give aid or comfort to parties then in rebellion against the United States.

Now, although the condition of the bond is an amplification of the condition prescribed in the instructions of the Secretary, yet the amplification is in line with, and intended more effectually to secure the performance of, the condition prescribed. The instructions authorized the collector to stop the vessel and the goods from clearing at all, if he believed, on satisfactory ground, that the latter were intended for places in the possession of the insurgents, or that there was imminent danger of their falling into their hands. Now, though he might have grounds deemed by him satisfactory for believing that the goods were intended for the use of the insurgents, yet, on assurances given by the shipper that they were really and truly intended for consumption in Mexico, he might be willing to let them go forward, if the shipper would give security that they should be landed and used in Mexico, and should not, with his consent or allowance, or that of his agents, be used to give aid and comfort to the insurgents. This is substantially what the condition of the bond amounts to. And it cannot be denied that it is in general conformity with the purpose and

object intended to be secured by the act and the instructions of the Secretary. This purpose and this object were to prevent vessels and goods whose destination was suspicious from getting into the hands of the insurgents. To effect this object, power was given to the Secretary, and by his instructions like power was given to the collector, to refuse a clearance to a vessel or goods absolutely, where there was good ground to believe that they were really destined for the use of the insurgents.

Now, under certain circumstances, specified in the second section of the act, the collector had authority to take a certain bond, without being instructed thereto by the Secretary of the Treasury. By virtue of instructions given by the Secretary under the third section, the collector had authority, and was required, to take a certain other bond; and he was further authorized to refuse a clearance altogether. Under this last power of refusing a clearance, what was there to prevent him, or to make it unlawful for him, to take such a bond as was given in this case, if the owner of the goods chose to enter into it for the purpose of inducing the collector to grant the clearance? It only requires what the law sought to secure. If the shipper chose to give the bond in order to get his goods cleared, it was a voluntary act on his part; and what ground has he or his sureties to complain? The only complaint they could make, if they could make any, was, that the circumstances did not exist which would have justified the collector in refusing a clearance, and that the taking of the bond was, therefore, an act of duress. But this the defendant did not attempt to prove. He put himself at the trial on the sheer ground that the collector had no right to take such a bond at all as the one in question. But the right to take the bond, so far as the shipper and his sureties are concerned, was included in the greater right to refuse the clearance altogether. And the bond itself, duly executed by them, is *prima facie* evidence that it was voluntarily entered into. *United States* v. *Bradley*, 10 Pet. 843.

The government, however, did not rest upon the bond alone, but offered to prove that the goods were not landed at Matamoras, according to their destination; but that, after the

vessel arrived in the mouth of the Rio Grande, they were, with the consent and knowledge of the shipper's agents, actually sold to the military authorities of the Confederate States. This would have been strong presumptive evidence (if any evidence were needed on the subject) that the collector had satisfactory ground of belief that the goods were intended for the use of the insurgents; and that although, as between him and the government, he may have exercised too great indulgence to the shipper in taking the bond and letting the goods go forward, yet that the shipper and his sureties had no ground of complaint on that score.

Our opinion is, that, considering the powers which were conferred upon the collector by virtue of the instructions issued by the Secretary of the Treasury under the third section of the act, he had authority to take such a bond as that which is the subject of this suit.

But even if the first condition of the bond, which required the goods to be consumed in the republic of Mexico, were not sustainable, the latter condition, which provided that no part of the goods should be transported to any place under insurrectionary control, and that none of them should be used in any way, with the consent or allowance of the shippers or their agents, to give aid or comfort to parties in rebellion against the United States, is in exact conformity with the instructions, and is severable from the rest. On the authority of *United States* v. *Hodson* (10 Wall. 395), and the cases there relied on, the bond would be good *pro tanto;* and as the evidence offered by the government tended to show a breach of this condition, which is free from objection, it should have been received.

In either aspect of the case, therefore, whether we consider the bond as in general conformity with the object of the act, and voluntarily given by the shipper to obtain a clearance of his goods, or whether we consider it as strictly conformable to the instructions issued under the third section, with only a superadded condition, which may be disregarded, the court below was in error in rejecting the evidence offered by the plaintiff, and directing a verdict for the defendant.

We think the case is covered by the decision in *United*

States v. *Hodson*, and other cases of recent consideration which might be referred to.

The judgment of the Circuit Court will be reversed, and the cause remanded for a new trial; and it is

So ordered.

KENDIG v. DEAN.

A., a citizen of Tennessee, filed his bill in the Circuit Court of the United States, sitting in that State, against B., a citizen of Ohio. A corporation created by the laws of Tennessee was an indispensable party to any relief to A. which a court of equity could give. The court, on a final hearing upon the pleadings and proofs, dismissed the bill. *Held*, that the dismissal should have been without prejudice.

APPEAL from the Circuit Court of the United States for the Western District of Tennessee.

The facts are stated in the opinion of the court.

The cause was argued by *Mr. Philip Phillips* for the appellant, and by *Mr. H. T. Ellett* for the appellee.

MR. JUSTICE MILLER delivered the opinion of the court.

This suit was brought against Dean, a citizen of Ohio, by Kendig, a citizen of Tennessee. The controversy related to one hundred and eighty-four shares of the stock of the Memphis Gas-light Company, a corporation created by the latter State. The company was not made a party to the suit. A demurrer to the bill was overruled; and the court, upon a final hearing on the bill, answer, exhibits, and depositions, dismissed the bill. Kendig thereupon appealed here.

We are of opinion that the Circuit Court had no jurisdiction to try the case, because the gas-light company was an indispensable party to the relief sought in the bill, or to any relief which a court of equity could give.

The substance of the bill is that the complainant was the owner of the shares in question, and that while he so owned and held them, and during the late civil war, the defendant "obtained possession of the books and control of the offices of the company, and being so in possession and control, wrong-

fully and fraudulently procured and obtained to be made a transfer upon the books of the company to his own name as owner, and from the name of your orator, the said one hundred and eighty-four shares of stock, and the issuance to him of a certificate of said stock, and the cancellation of the certificate of his stock belonging to and in the name of your orator." It is further alleged that this was done without purchase from, or consideration given to, the complainant, and without any lawful authority.

The relief prayed is, "that the said capital stock may be restored to your orator, and deemed to be of his property; and that all the right and title thereto may be divested out of said Dean, and vested in your orator; and that said Dean may be compelled to cause and authorize the transfer of said stock to be made on the books of the company to your orator, and may be enjoined from making or authorizing to be made a transfer of any of the stock to any other person; and that other suitable relief may be granted to your orator." The original certificate of stock is in possession of the complainant, as he declares in the bill, and is annexed to it as an exhibit.

It also appears that the corporation, at the time the suit was brought, had a president, a board of directors, and a secretary. This suit is not brought to recover the dividends received by Dean which ought rightfully to have been paid to the complainant. No such relief is asked, and there is no averment that any dividends were declared or paid to Dean on that account. Nor is it brought to recover damages for the wrongful seizure and conversion of the complainant's property to the defendant's use.

The relief appropriate to either of these grievances might have been sought in an action at law. It is not an action to obtain from Dean the specific certificate of stock, for that remains in the complainant's possession.

The *gravamen* of the charge is that Dean, while in possession of the books and in control of the offices of the company, caused a transfer to be made on its books to him of the shares of its stock owned by the complainant. The relief asked is the restoration of the stock on those books to the name of the complainant, and the future recognition by the company of his

rights in the stock. And the court is asked to compel Dean to do this.

Suppose that the court had rendered a decree in the exact language asked for, and Dean should be attached for contempt in refusing to perform it. He could answer very truly that he was not the gas-light company, and had no control of its books or its officers; that he had no means of compelling it to make transfer of this or any other stock on its books; and that it was a corporation governed by its own officers, and was not bound by the decree of the court, and would not perform it. The court would find itself in the position of having made a decree it could not enforce, of attempting to give a relief which was beyond its power, because the party whose action was necessary to that relief was not a party to the suit.

On the other hand, if the company had been a party to the suit, and the complainant had sustained the allegations of his bill by proofs, the company could have been compelled to restore him to the ownership of the stock on its books, and to treat him in future as one of its stockholders, Dean and it would have been bound by the decree. As it is, the specific relief sought is not within the power of the court, nor, in the absence of the company, is any relief within the equity jurisdiction of the court which can arise out of the frame of the bill.

The rules which govern the Circuit Courts of the United States sitting in chancery, in cases like this, have been well defined in *Shields* v. *Barron* (17 How. 130) and *Barney* v. *Baltimore City*, 6 Wall. 280.

In the latter case, it is said that there is a class of persons who may or may not be made parties to the suit at the discretion of plaintiff, without being noticed by the court. A second class, who, if their interest is brought to the attention of the court, it will, before deciding the cause, require them to be made parties if within its jurisdiction, but who are not so necessary to relief that their absence defeats the jurisdiction. "And there is a third class," says the court, "whose interests in the subject-matter of the suit, and the relief sought, are so bound up with that of the other parties, that their legal presence as parties to the proceeding is an absolute necessity, with-

out which the court cannot proceed. In such cases, the court refuses to entertain the suit when these parties cannot be subjected to its jurisdiction." The case before us comes plainly within the language here used. The gas-light company is an indispensable party to the relief sought by this bill.

The Circuit Court, although it dismissed the bill, did so on the merits, and that decree would bar the complainant from any other suit in which Dean's right to this stock might be contested. It should have been dismissed without prejudice, for want of a necessary party who was not brought before the court.

The decree, as in the precisely similar case of *Barney* v. *Baltimore City* (*supra*), and in the more recent case of *House et al.* v. *Mullen* (22 Wall. 42), must therefore be reversed, and the cause remanded with directions to dismiss the bill without prejudice; and it is

So ordered.

MIMMACK v. UNITED STATES.

Charges of drunkenness on duty having been preferred against A., a captain in the army, he proposed that if they should not be acted upon he would place his resignation in the hands of his commanding officer, to be held, and not forwarded to the War Department, if he should entirely abstain from the use of intoxicating liquors. Accordingly, May 10, 1868, he enclosed in a letter to that officer his resignation, stating that it was without date, and authorizing him, subject to the condition above stated, to place it in the hands of the department commander, to be forwarded to the War Department if he, A., should become intoxicated again. On A.'s again becoming intoxicated on duty prior to Oct. 3, 1868, the department commander, on being notified of the fact, inserted the date of the 5th of that month in the resignation, and duly forwarded it. On the 29th, it was accepted by the President, and the notification of his action thereon was received by A. Nov. 11. The President revoked his acceptance, Dec. 11; but no order promulgating the revocation, or restoring A. to duty, was issued by the War Department. Dec. 22, 1869, the Senate advised and consented to the appointment of B. to be a captain, *vice* A. resigned. *Held*, 1. That A., by voluntarily placing his resignation, without date, in the hands of his commanding officer, authorized him, upon his (A.) becoming again intoxicated, to insert a proper date in such resignation, and forward it for acceptance. 2. That A.'s office became vacant upon his receipt of the notification of the acceptance by the President of the resignation. 3. That the action of the President, revoking such acceptance, did not restore A. to the service.

APPEAL from the Court of Claims.

This was a suit brought Sept. 2, 1873, in the Court of Claims, by Bernard P. Mimmack against the United States, to recover pay and allowances as a captain in the army to that date from Dec. 11, 1868, amounting to $9,344.29. The court found the following facts: —

That in May, 1868, the petitioner, said Mimmack, was a captain of the thirtieth regiment of infantry, and brevet-major, on duty at Fort Sidney, which was under the command of General Potter.

Previous to the 10th of May, charges, with specifications of drunkenness on duty, &c., were preferred against the petitioner; and he then said that, on condition the charges should not be acted upon, he would place his resignation in the hands of General Potter, to be held by him, and not forwarded to the War Department, if he should entirely abstain from the use of intoxicating liquors; and on the 10th of May the petitioner enclosed his resignation to General Potter in a letter, stating that the resignation was without date, and authorizing General Potter to place it in General Augur's hands, to forward to the War Department, should he, the petitioner, ever become intoxicated again. General Potter sent the resignation and letter of the petitioner to General Augur, and informed him of the understanding had with the petitioner, as above stated.

Previous to Oct. 3, 1868, the petitioner having been again intoxicated on duty, and by excessive drunkenness confined to his bed in a state bordering on delirium tremens, General Potter placed him under arrest, and ordered him to turn over the company's property in his hands. By letter, dated Oct. 3, 1868, General Potter informed General Augur that the petitioner had again broke out drinking hard, and that he had placed him under arrest, and ordered him to turn over the company property.

On the 5th of October, General Augur forwarded the petitioner's resignation, with the date filled up "Oct. 5, 1868," to the War Department. This date was not filled up by the petitioner, nor was he informed of the communication by General Potter, nor of the fact that his resignation was to be forwarded to the War Department.

On the 29th of that month, the resignation was accepted by the President, to take effect from that date, and notice of the acceptance was sent to the petitioner, who received it Nov. 8. It was not shown that the President, at the time of accepting it, had been informed of the manner in which it had been lodged with General Potter, or of the fact that the date had been filled in by a third person, or of any of the circumstances connected with the resignation.

On the 18th of November, the President promoted First-Lieutenant Appleton D. Palmer to be "captain in the thirtieth regiment of infantry," "*vice* Mimmack, resigned;" and notice thereof was sent by letter to Captain Palmer, of that date, but he was not then commissioned.

On the 8th of December, the name of First-Lieutenant Palmer was placed on the list of nominations made by the President to be sent to the Senate.

On the 11th of December, the President, on the petitioner's application, revoked the acceptance of the resignation, and ordered him to duty, and notice thereof was given to the Secretary of War.

On the 12th of December, a report was made to the President of the facts of the case by the War Department, and on the 24th the report was returned to the Secretary of War by the President for action under the order of Dec. 11.

The report and the direction of the President were referred to the General of the Army, who requested that, before an order was issued, the opinion of the Attorney-General might be obtained as to the legality of the President's revocation of his acceptance of the petitioner's resignation.

On the 30th of December, by the direction of the President, the name of First-Lieutenant Palmer was stricken from the list of nominations made by the President to be sent to the Senate, and the Secretary of War was notified thereof.

On the 4th of January, 1869, the case of the petitioner, with the papers relating thereto, was submitted by the Secretary of War to the Attorney-General, who, on the 4th of February, gave his opinion that the President's revocation of his acceptance of the petitioner's resignation had not the effect of restoring him to his former position in the military service.

On the 13th of February, the opinion of the Attorney-General and the papers containing the President's order were sent to the General of the Army; and he declined to permit his name to be used in promulgating the order, as in his opinion it was illegal, and he was sustained in that by the opinion of the Attorney-General.

On March 11, 1869, President Grant nominated First-Lieutenant Palmer to the Senate to be "captain, Oct. 29, 1868, *vice* Mimmack, resigned." The nomination was not acted upon. By letter of May 4, 1869, he was notified of his promotion by letter.

On the 6th of the following December, the President renominated Lieutenant Palmer to be "captain, Oct. 29, 1868, *vice* Mimmack, resigned;" and the Senate, on the 22d of that month, advised and consented to the appointment, agreeably to the nomination.

On the 19th of February, 1869, the petitioner enlisted in the marine corps, and served therein until the 27th of August, when he was transferred to the United States ship "Lancaster," and served as clerk, and then secretary to the commanders of squadrons, until May 22, 1872; and in the time specified he received as pay $2,344.09.

On the 2d of November, 1872, the petitioner was appointed a clerk in the Second Auditor's office, and served therein till Aug. 16, 1873, when he was appointed a clerk in the Fourth Auditor's office; and up to June 30, 1874, he had received pay as clerk as aforesaid to the amount of $2,082.49.

The Court of Claims dismissed the petition, and found as a conclusion of law that the revocation by the President of his acceptance of Mimmack's resignation, after notice to him of such acceptance, did not restore the petitioner to his post in the army.

Judgment having been rendered, Mimmack appealed here.

Mr. Albert Pike for the appellant.

Even if it be conceded that Mimmack did actually resign his commission, the President had the power, before the vacancy was filled, to recall or revoke his acceptance of the resignation. *Rex* v. *Mayor of Rippon*, 1 Ld. Raym. 563; s. c. 2 Salk. 433; *Montgomery* v. *United States*, 5 Ct. of Cl. 94.

The resignation of a civil officer takes effect when it is received by the appointing power. *United States* v. *Wright*, 1 McLean, 509; *Gates* v. *Delaware Co.*, 12 Iowa, 405; *People* v. *Porter*, 6 Cal. 26. But that of a military officer does not take effect until he has received notice of its acceptance. If he leaves his post without such notice, he renders himself liable to the penalties for desertion. 12 Stat. 316.

A prospective resignation is an intention, or at least a promise, to resign, which may be withdrawn before the time fixed; and where no new rights have intervened, it may, with the consent of the accepting party, be withdrawn even after it has been accepted. *Biddle* v. *Willard*, 16 Ind. 66. Before the President recalled his acceptance of Mimmack's alleged resignation, a letter of appointment had been sent to Palmer, but no commission was issued. The President's appointing power is only completely exercised when he performs the last act required from him: which is signing the commission, and causing to be thereunto affixed the seal of the United States. *Marbury* v. *Madison*, 1 Cranch, 137; *United States* v. *Le Baron*, 19 How. 73; *United States* v. *Bank of Arkansas*, Hemp. 460. And where a vacancy happens during the recess of the Senate, he can only fill it by granting a commission "which shall expire at the end of the next session." The letter of appointment was, therefore, an absolute nullity, conferring on Palmer no rights, and presenting no obstacle to the President's action in revoking his acceptance of a pretended resignation forwarded to him without Mimmack's knowledge.

There is no decided case which affirms that the resignation of an officer in the civil service, after it has been received by the appointing power, cannot, by the consent of the latter, be withdrawn. By the uniform practice of the government, from its origin, his relations to that service, after his resignation has been so withdrawn, remain the same as if it had never been sent. Such is the effect of the revocation of the acceptance of the resignation of an officer in the military or the naval service, if the office be not filled at the time of such revocation.

"The revocation of an order accepting the resignation of an

officer of the regular army is not in the nature of a new appointment, and upon such revocation the officer assumes his previous status and relative rank in his arm of the service, subject only to the loss of his pay and allowances for the period during which he was actually out of the service." Opinions of the Judge-Advocate-General of the Army, Official Record, vol. xix. p. 307; Digest of Opinions, 328; id. (ed. 1866) 210.

When, therefore, President Grant sent the name of Palmer to the Senate, Mimmack was in the service, and he could not be removed therefrom by force of an executive nomination, even if it was sanctioned by the Senate. No officer, in time of peace, can be dismissed from the military service, except pursuant to the sentence of a court-martial. 14 Stat. 92.

There never was any valid tender of a resignation. General Potter held the paper, not as the superior officer of Mimmack, but as his private agent, *pro hac vice*. Mimmack, five months before, had agreed that it should be forwarded as his resignation, if he should "ever become intoxicated again." Intoxication does not involve the forfeiture of an office. The agreement was therefore void, — a mere promise, without consideration; but if it absolutely bound him, his commission of the act, which was the condition precedent on which alone the paper could be sent, should have been established upon a trial, after due notice to him.

The paper was not an escrow; because a deed is such only when its delivery is dependent on something to be done by the person therein named as grantee. If the maker has a right to reclaim it, it is no escrow.

Captain Mimmack having never been out of the service, his place was not lawfully filled by another, and he is entitled to his pay and allowances, for which this suit was brought.

The Attorney-General, contra.

1. The contingency having happened upon which, by the express authority of Mimmack, his resignation in writing was to be forwarded, its transmission to the War Department was, in law, his own voluntary act.

2. On his receiving through the appropriate channel a notice of the President's acceptance of that resignation, his connec-

tion with the military service of the United States terminated, and the right of Palmer to promotion at once accrued.

3. The President's subsequent attempted revocation of his acceptance could not defeat that right, nor work Mimmack's restoration. *Dubarry's Case*, 4 Op. Att'y-Gen. 124; *Whitney's Case*, id. 277; *Kendall's Case*, id. 806; *Downing's Case*, 7 id. 99. The latter result could only be accomplished by an appointment by the President, by and with the advice and consent of the Senate.

4. The appointment by the President and Senate of Palmer as captain, *vice* Mimmack, resigned, would seem of itself to be conclusive as to the status of the latter. At all events, in this suit their action cannot be set aside, nor can his claim to the captaincy be asserted adversely to the right of another, who holds the commission.

5. That action, if subject to judicial review, must be declared unlawful and void, and Mimmack's title established in a direct proceeding, before a suit for the pay and emoluments of the office can be maintained.

MR. JUSTICE CLIFFORD delivered the opinion of the court.

Nothing short of a written resignation to the President, or the proper executive department, by a commissioned officer of the army, navy, or marine corps, and the acceptance of the same duly notified to the incumbent of the office, in the customary mode, will of itself create a vacancy in such an office, or prevent the incumbent, if the President consents, from withdrawing the proposed resignation; in which event the rights, privileges, duties, and obligations of the officer remain just as if the resignation had never been tendered.

Prior to notice that the resignation tendered has been accepted by the President, the officer in such a case may not without leave quit his post or proper duties, nor is he deprived of any of the rights or privileges conferred and enjoyed by virtue of his appointment and commission.

Charges, with specifications of drunkenness on duty, were made to Brevet-Brigadier-General J. H. Potter, commanding Fort Sedgwick, against the petitioner; and the record shows that the petitioner proposed to that officer that, on condition

that the charges should not be prosecuted, he, the petitioner, would place his resignation as captain and brevet-major in the hands of the officer to whom the charges were preferred, to be held by him and not to be forwarded to the War Department if he, the accused, should thereafter entirely abstain from the use of intoxicating liquors; and that on the 10th of May, 1868, the petitioner enclosed his resignation, addressed to the adjutant-general of the army, in a letter to the officer commanding Fort Sedgwick, stating that the resignation was without date, and authorizing the party to whom the letter was addressed to place the resignation in the hands of the department commander, to be forwarded to the War Department should he, the petitioner, ever again become intoxicated.

Pursuant to the request of the letter and the authority it conferred, both the letter and the resignation of the petitioner were forwarded to the commander of the department, who was fully informed of the purpose for which the documents were forwarded.

Previous to October in the same year, the petitioner again became intoxicated on duty, and was by such continued excesses confined to his bed in a state bordering on delirium tremens, in consequence of which the commander at Fort Sedgwick placed him under arrest, and ordered him to turn over the property of the company in his hands, as therein directed. Due notice that the petitioner had again "broke out hard drinking," and that he had been placed under arrest and ordered to hand over the company property, was given to the department commander on the same day. Two days later, the department commander forwarded the resignation of the petitioner, with the date filled up, Oct. 5, 1868, to the War Department; but the finding of the court below shows that the date of the resignation was not filled up by the petitioner, nor was he informed of the communication sent to the department commander, nor of the fact that his resignation was to be forwarded to the War Department. On the 29th of the same month, the resignation of the petitioner was accepted by the President, and notice to the petitioner of that date of such acceptance was duly forwarded, which, as the findings of the subordinate court show, was received by him on the 8th of November following.

By those proceedings it was at the time supposed that a vacancy was created, and ten days subsequently the President promoted First-Lieutenant Appleton D. Palmer to be captain in the thirtieth regiment of infantry, *vice* Bernard P. Mimmack, resigned, and notice thereof was sent by letter to the appointee of that date, but he was not then commissioned. On the 11th of December following, the President, on the application of the petitioner, revoked his acceptance of the resignation of the petitioner, and ordered him to duty, and notice thereof was given to the Secretary of War.

Proofs having been taken, the parties were heard; and the court rendered judgment that the petition should be dismissed, the conclusion of law adopted being that the revocation by the President of his acceptance of the petitioner's resignation, after due notice to the petitioner of such acceptance, did not restore the petitioner to the army. From which judgment the petitioner appealed to this court.

Full pay and allowances are claimed by the petitioner from the 11th of December, 1868, to the date of the judgment, amounting to the sum of $9,344.29, as appears by the statement of his account annexed to his petition.

Three principal errors are assigned: 1. That the court erred in holding that the revocation by the President of his acceptance of the supposed resignation of the petitioner, after the petitioner was notified of such acceptance, did not restore him to the army. 2. That the court erred in holding that the petitioner did in fact resign his office as captain in the army, and that the writing signed by him and shown in the record was in law and fact his resignation. 3. That the court erred in holding that by the said paper coming to the hands of the President and his acceptance of it as a resignation, and notice of such acceptance to the petitioner, he ceased in law to be an officer in the army of the United States.

Attempt is made to support these several propositions by the facts exhibited in the findings of the court below, in addition to those already reproduced, from which the petitioner insists that the court here may decide that the petitioner never resigned his commission, and that the office he held under it never became vacant.

On the next day after the President revoked his acceptance of the resignation of the petitioner, a report of the facts of the case was made to the President by the War Department; and on the 24th of the same month the report was returned by the President to the Secretary of War, for action under the prior order of the President, when the report and the direction of the President were referred to the General of the Army. Due consideration having been given to the matters so referred to him, the General of the Army requested that before an order was issued the opinion of the Attorney-General might be obtained as to the legality of the President's revocation of his acceptance of the petitioner's resignation.

On the 18th of the same month, the name of Appleton D. Palmer, previously placed on the list of nominations as first lieutenant, was, by the direction of the President, stricken from the list of nominations to be sent to the Senate, and the Secretary of War was duly notified of that fact.

Pursuant to the request of the General of the Army, the case of the petitioner, with the papers relating thereto, were, on the 4th of the succeeding month, submitted by the Secretary of War to the Attorney-General, who subsequently gave it as his opinion that the President's revocation of his acceptance of the petitioner's resignation did not have the effect of restoring him to his former position in the military service. *Mimmack's Case*, 12 Op. Att'y-Gen. 555.

Without much delay, the opinion of the Attorney-General and the papers containing the order of the President were sent to the General of the Army, and he declined to permit his name to be used in promulgating the order, as he was of the opinion that it was illegal, and concurred with the Attorney-General.

All the proceedings thus far in the case took place during the administration of President Johnson. On the 11th of March, 1869, President Grant nominated First-Lieutenant Appleton D. Palmer to be captain, Oct. 29, 1868, *vice* Bernard P. Mimmack, resigned; but the Senate did not act on the nomination, and it was renewed on the following December, and on the 22d of the same month the nomination was confirmed by the Senate.

Four principal questions arise in the case, and it is clear that, if they are all decided adversely to the petitioner, the judgment of the court below must be affirmed. They are as follows: 1. Did the petitioner resign, as found by the Court of Claims? 2. Did the President accept his resignation, and cause him to be notified of the acceptance of the same? 3. Could the President revoke his acceptance of the petitioner's resignation, after having given him notice that it was accepted? 4. Is there anything in the other facts found by the court below to show that the resignation as accepted was ever legally revoked or rendered inoperative?

Sufficient appears to show that the resignation without date was written by the petitioner, and that it was enclosed by the petitioner in a letter and sent to the commander at Fort Sedgwick, with the request to place it in the hands of the department commander, to be forwarded to the War Department should he, the petitioner, ever again become intoxicated. Beyond all question, the resignation, voluntarily written and signed by the petitioner, together with the letter enclosing the same, was placed in the hands of the department commander pursuant to his request, with directions that it should be forwarded to the War Department in case he should ever again commit the offence described in the charges previously preferred against him by the commander of Fort Sidney.

Nor does it make any difference that the resignation was without date, as it is a clear legal proposition that the petitioner, by placing the resignation in the hands of the depositary, with power to forward it to the War Department in the event described, authorized the holder, upon the happening of the event, to fill up the date; and the subsequent conduct of the petitioner supports the conclusion that the depositary did not exceed his authority.

Viewed in the light of these suggestions, it is clear that the delivery of the resignation must be regarded as of the same validity as it would have had if the blank date had been filled up by the petitioner, and he had personally transmitted it to the War Department. Opposed to that is the suggestion that the transaction is one of an unusual character; but the answer to that is that the proposition came from the petitioner, and

that it does not lie with him to call in question either its propriety or validity.

Argument to show that the President did accept the resignation and notify the writer of the same that it had been accepted is unnecessary, as both facts are embraced in the findings of the court below; nor was any attempt made in argument to deny that the evidence justified the findings.

Officers of the kind are nominated by the President and confirmed by the Senate; and if the petitioner ceased to be such an officer when notified that his resignation had been accepted, it requires no argument to show that nothing could reinstate him in the office short of a new nomination and confirmation. Prior to the act of the 13th of July, 1866, the President could dismiss an officer in the military or naval service without the concurrence of the Senate, but he never could nominate and appoint one without the advice and consent of the Senate, as required by the Constitution. *Dubarry's Case*, 4 Op. Att'y-Gen. 608; 14 Stat. 92.

Since the passage of that act, the President cannot dismiss such an officer in time of peace, and certainly no vacancy in such an office can be filled without the advice and consent of the Senate; from which it follows that the opinion of the Attorney-General, that the subsequent action of the President did not restore the petitioner to the military service, is correct. 12 Stat. 816.

Concede that, and it follows that the office became vacant when the incumbent was notified that his resignation had been accepted, and that the new appointment was in all respects regular when confirmed by the Senate.

Decided support to that conclusion, if any be needed, is derived from the subsequent findings of the court below, from which it appears that the petitioner, on the 19th of February, subsequent to the confirmation of the new appointee to the office in question, enlisted in the marine corps, and that he remained in that situation until his compensation amounted to $2,344; and that he was subsequently appointed a clerk in the Treasury Department, and that he served there in different capacities until his compensation amounted to more than $2,000 in addition to what he had previously received for his services in the marine corps.

For these reasons the court is of the opinion that the subsequent action of the President did not restore the petitioner to the military service, and that his claim was rightly rejected.

Judgment affirmed.

STOLL v. PEPPER.

If a distiller uses material for distillation in excess of the estimated capacity of his distillery, according to the survey made and returned under the provisions of the law regulating that subject, but, in the regular course of his business, pays the taxes upon his entire production, he cannot be again assessed at the rate of seventy cents on every gallon of spirits which the excess of material used should have produced, according to the rules of estimation prescribed by the internal-revenue law.

ERROR to the Circuit Court of the United States for the District of Kentucky.

The court below found the following facts:—

Robert P. Pepper, was a distiller within the seventh district in the State of Kentucky, and the surveyed capacity of his distillery was $151\frac{82}{100}$ bushels per day. During the months of May, June, July, and August, 1873, he produced spirits in excess of the surveyed capacity to the number of 2,261¼ gallons, on which a tax was payable amounting in the aggregate to the sum of $1,582.86.

The surveyed capacity of the said distillery was duly reported to the Commissioner of Internal Revenue, and the spirits produced, including the said excess, were drawn from the receiving cistern, and placed in the government warehouse attached to the distillery, and were duly reported and assessed, and bonds for the payment of the tax was given according to law; all of which was duly reported to the Commissioner of Internal Revenue.

Afterwards the commissioner made an assessment of seventy cents per gallon for all the spirits produced in excess of the surveyed capacity during the months of May, June, July, and August, and directed the defendant Stoll, collector of the seventh district, to collect the same.

This assessment was made under the twentieth section of

the act of June 6, 1872, and was made for the same spirits upon the same number of gallons, and for the same amount for which the taxes had already, under the first regular reports, been assessed and secured by bond, and which have since been paid, so that a collection of this assessment by the Commissioner of Internal Revenue would enforce a double payment of the tax upon the spirits.

In the production of spirits in excess of the estimated capacity no evasion of law was intended, and no benefit was derived from it by Pepper, the plaintiff, but the distillery was run beyond its surveyed capacity with the knowledge of the government officers, including the collector.

On the 9th of January, 1874, the defendant, after having made demand of the plaintiff for payment of the amount assessed for the said excess, and the plaintiff having refused payment, seized one hundred and fifty barrels of spirits belonging to the plaintiff, and containing 6,497½ proof gallons, and after advertising the same for ten days, sold the whole lot at Frankfort, the place of seizure, for the sum of $1,798.70, being the amount of taxes assessed, inclusive of costs and penalties.

Said plaintiff before and at the time of seizure, and at the sale, in writing, protested to the defendant against the said proceedings, and notified him that he would hold him liable; and at the time of the sale of the said spirits the plaintiff was present, and warned bidders that the sale was illegal, and he would hold the purchasers responsible for the value of the whiskey.

Before this suit was brought, the plaintiff appealed to the Commissioner of Internal Revenue, according to law, for the correction of the said assessments as erroneous and illegal, and the said appeal was rejected. The spirits seized were, at the time of the seizure and up to the time of sale, of the market value of fifty-five cents per gallon, and of the aggregate value of $3,573.62. The court being of opinion that the second assessment by the Commissioner of Internal Revenue was not authorized by law, but that the plaintiff could not recover more than the amount actually collected, with interest at the rate of six per cent per annum, gave judgment that he recover the sum of $1,887.43, with interest thereon at the rate of six per cent

per annum from the twenty-fifth day of November, 1874, until paid, and his costs.

The collector then sued out this writ of error.

The Solicitor-General for the plaintiff in error.
Mr. Thomas W. Bullitt, contra.

MR. CHIEF JUSTICE WAITE delivered the opinion of the court.

The question in this case is, whether, if a distiller uses material for distillation in excess of the estimated capacity of his distillery, according to the survey made and returned under the provisions of the law regulating that subject, and in the regular course of his business pays the taxes upon his entire production, he can be again assessed at the rate of seventy cents on every gallon of spirits which the excess of material used should have produced, according to the rules of estimation prescribed by the internal-revenue law. There is no pretence of bad faith. No evasion of the law was intended, and no benefit was derived by the distiller from what was done. He paid taxes on his entire production, and the second assessment was made upon precisely the same number of gallons that he had reported in his regular reports. The enforcement of this assessment, if made, will operate as double taxation, and nothing more.

The case arises under sect. 20 of the act of July 20, 1868 (15 Stat. 133), as amended June 6, 1872 (17 id. 244), and which is as follows:—

"That on the receipt of the distiller's return in each month the assessor shall inquire and determine whether the distiller has accounted for all the grain or molasses used, and all the spirits produced by him in the preceding month. If the assessor is satisfied that the distiller has reported all the spirits produced by him, and the quantity so reported shall be found to be less than eighty per cent of the producing capacity of the distillery as estimated under the provisions of this act, an assessment shall be made for such deficiency at the rate of seventy cents for every proof gallon. In determining the quantity of grain used, fifty-six pounds shall be accounted as a bushel; and if the assessor finds that the distiller has used any grain or molasses in excess of the capacity of his distillery, as estimated under the provisions of this act, an assessment shall be

made against the distiller, at the rate of seventy cents for every proof gallon of spirits that should have been produced from the grain or molasses so used in excess, which assessment shall be made whether the quantity of spirits reported is equal to or exceeds eighty per cent of the producing capacity of the distillery. If the assessor finds that the distiller has not accounted for all the spirits produced by him, he shall, from all the evidence he can obtain, determine what quantity of spirits was actually produced by such distiller, and an assessment shall be made for the difference between the quantity reported and the quantity shown to have been actually produced, at the rate of seventy cents for every proof gallon: *Provided*, that the actual product shall be assumed to be in no case less than eighty per cent of the producing capacity of the distillery, as estimated under the provisions of this act, or under the act to which this is an amendment."

Before any distiller can commence business, some person designated by the Commissioner of Internal Revenue must make a survey of his distillery, "for the purpose of estimating and determining its true spirit-producing capacity for a day of twenty-four hours." Act of 1868, sect. 10 (15 Stat. 129), amended by sect. 12, act of 1872, 17 id. 239. There is nothing in any act of Congress which requires a distiller to call for a resurvey, unless he wishes to reduce his production (15 Stat. 138, sect. 30); but the Commissioner of Internal Revenue may at any time direct a new survey, if he is satisfied that the one already made is "in any way incorrect or needs revision." 17 id. 239, sect. 12.

There is nowhere in the internal-revenue law any express prohibition of production in excess of the estimated capacity. The requirement of taxes to the extent of eighty per cent of the capacity was intended to guard against the danger of frauds which might arise if under-production was allowed; but as the entire product goes from the distillery to the warehouse, and is there taxed without any deduction, it would seem that, if more than the estimated quantity was produced, the government could have no just cause of complaint. A continued over-production would be evidence to the commissioner of an incorrect survey which might need revision; but if the distiller does not escape taxation, the government suffers no loss.

The particular section under consideration evidently relates

alone to the assessment and collection of taxes, and not to the punishment of offences. A distiller's books and his monthly returns should truly state the quantity of spirits he has produced. This section requires that upon the receipt of these returns the designated officer shall inquire and determine whether all the material used and the spirits produced have been accounted for. If he is satisfied that the production has been correctly reported, he must next inquire whether it equals or exceeds eighty per cent of the estimated producing capacity of the distillery, and, if it does not, make an assessment for the deficiency at the rate of seventy cents a gallon, — the theory of the law being that a distiller must at all events pay taxes upon eighty per cent of his producing capacity.

If, however, the officer finds that the distiller has not accounted for all the spirits he has produced, he must, from such evidence as he can obtain, determine what quantity was actually produced, and make an assessment for the difference between the quantity reported and that shown to have been produced, at the rate of seventy cents a gallon; but in no case can the actual product be assumed to be less than eighty per cent of the producing capacity of the distillery. Thus far clearly only the assessment of taxes is indicated.

There remains to be considered the provision specially applicable to this case, and that is where the officer finds that the production is in excess of the estimated capacity of the distillery. If this is an offence, it is certainly no more heinous than that of not accounting for all spirits actually produced, and as to which provision is here made only for an assessment of the tax for the deficiency. It would seem, therefore, that the object of this part of the section must have been to secure the collection of the tax, and not to impose a penalty for over-production. The provision is found immediately following that which requires the officer to determine whether the distiller has accounted for all the material used and all the spirits produced. For the purpose of verifying the return as to the quantity produced he applies the statutory rule of production to the quantity of material used, and for the purpose of verifying the report of material used he reverses the process and reduces the product to material. If he becomes satisfied that the returns are cor-

rect, and that there has been no excess of material used, he simply inquires whether the product equals or exceeds eighty per cent of the estimated producing capacity of the distillery, and if it does, his work is done. The law is satisfied in such cases if the actual production equals or exceeds eighty per cent of the producing capacity of the distillery, or, what is the same thing, eighty per cent of the statutory estimate of the producing capacity of the material used; for in making the survey the statutory estimate of production from the material is applied, and the estimated capacity of the distillery in gallons indicates exactly the estimated quantity of material that will be used. But if an excess of material is used, a different rule is to be applied, and the tax for the excess is not to be paid on the actual product, but on what it should have been according to the statutory estimate of the producing capacity of the material. It was to insure the payment of the tax upon the excess of material at this rate that we think this provision was introduced. We cannot believe that double taxation was intended, for that would be introducing into a section of a statute apparently intended only to regulate the assessment of taxes in several classes of cases, a penal provision as to one of the classes which did not apply to the others, and when there was seemingly no cause for the unfavorable discrimination. The provision is relieved from the charge of being superfluous by the fact that it imposes a tax upon the production of the excess of material at what it should have been according to the statutory estimate of the capacity of the material, and not upon what it actually was.

Judgment affirmed.

SETTLEMIER v. SULLIVAN.

In ejectment for lands in Oregon, the defendant claimed title under a sheriff's deed, pursuant to a sale of them under execution sued out upon a judgment by default rendered in 1861 against A. in the State court. A certified transcript of the judgment record, consisting, as required by the statute, of a copy of the complaint and notice, with proof of service, and a copy of the judgment, was put in evidence. The statute also required that in actions *in personam* service should be made by the sheriff's delivering to the defendant personally, or, if he could not be found, to some white person of his family above the age of fourteen years, at his dwelling-house or usual place of abode, a copy of the complaint and notice to answer. The suit against A. was for the recovery of money, and the sheriff's return showed that service was made "by delivering to the wife of A., a white woman over fourteen years of age, at the usual place of abode," a copy of the complaint and notice; but it contained no statement that A. could not be found. At the ensuing term, judgment was rendered against him, with a recital that the "defendant, although duly served with process, came not, but made default." *Held*, 1. That the court, by such service, acquired no jurisdiction over the person of A., and its judgment was void. 2. That such substituted service, if ever sufficient for the purposes of jurisdiction, can only be made where the condition upon which it is permissible is shown to exist. 3. That the inability of the sheriff to find A. was not to be inferred, but to be affirmatively stated in his return. 4. That the said recital is not evidence of due service, but must be read in connection with that part of the record which sets forth, as prescribed by statute, the proof of service. 5. That such proof must prevail over the recital, as the latter, in the absence of an averment to the contrary, the record being complete, can only be considered as referring to the former.

ERROR to the Circuit Court of the United States for the District of Oregon.

This was an action for the possession of certain lands in the State of Oregon. The plaintiff asserted title to them under a patent of the United States, issued, in 1875, to one Durcharme and wife, a previous conveyance by them to one Magers, and a deed by the latter and wife in 1877.

The defendant claimed to have acquired the title to the premises by a sheriff's deed, made in 1862, on a sale of the property under execution, upon a judgment recovered by one Walker against Magers in one of the courts of Oregon. The case turned upon the validity of this judgment. The demand in the complaint was for two hundred and fourteen acres of land; but the answer disclaimed title to portions of the

premises alleged to have been previously sold, and the recovery was had for the residue.

It appeared from the record that the judgment the validity of which was considered was rendered in September, 1861, in the Circuit Court of the county of Marion, in favor of one Samuel Walker against Magers for something less than $200, in an action upon two promissory notes of the defendant, one for $100 and one for $50, each drawing interest at the rate of two per cent a month. The complaint contained copies of the notes, and prayed judgment for the amount with accruing interest. Indorsed upon it was a notice which, in the system of procedure then prevailing in the State, took the place of process, addressed to the defendant, stating that unless he appeared in the Circuit Court for the county of Marion on the third Monday of September then following, and answered the complaint, it would be taken as confessed, and its prayer be granted.

The complaint and notice were not served upon the defendant personally, but on the 2d of September, 1861, were served upon his wife, by delivering copies to her "at the usual place of abode," she being, according to the certificate of the sheriff, "a white woman of over fourteen years of age." No statement is made by the officer that the defendant could not be found, nor is any reason given why personal service was not made upon him.

On the second day of the ensuing term, the 17th of September, judgment was rendered against the defendant for the amount due upon the notes as prayed. Its entry is preceded by a statement that on that day the plaintiff came by his attorneys, but that the "defendant, although duly served with process, came not, but made default." Upon this judgment execution was issued, and the property in controversy was sold.

In tracing his title through the sheriff's deed the defendant produced a copy of the entry of the judgment mentioned, without producing the complaint and notice and the sheriff's certificate of service. The omission was afterwards supplied by the plaintiff against the objection that the recital of service upon the defendant in the judgment could not be contradicted or impeached by the return of the sheriff, and that the entire judgment roll, and not detached portions of it, should be pro-

duced in any attempt to contradict or impeach the recital The plaintiff then produced a copy of the judgment similar to that already offered by the defendant. Those papers constituted under the statutes of the State, in force at the time, the judgment roll in the case, that is, the official record of the proceedings, showing the nature of the action, the manner in which jurisdiction over the person of the defendant was acquired, and the character of the judgment. Those statutes provided that, in cases of judgment by default, the judgment roll should consist of copies of the complaint and notice, with the proof of service, and a copy of the judgment or decree. In cases of judgment after appearance, the notice and proof of service could be omitted from the roll, as the pleadings would be sufficient in such cases to show the jurisdiction of the court. But in cases of judgment by default, the proof of service of the complaint and notice was to constitute an essential portion of the record; and that proof, when furnished by the sheriff, could by the statute only consist of his official certificate, or that of one of his deputies, whose acts in that respect were in legal effect his. There was no suggestion at the trial that there were any other documents which could be regarded as part of the official record in the case, the objection taken being that detached portions were at different times introduced, and not the whole at once. The defendant relied upon the recital in the entry of the default preceding the judgment, and the object of his objection was to compel his adversary to put in evidence the same recital.

The documents constituting the official record of the action being introduced, the court instructed the jury that the judgment was void for want of jurisdiction in the court rendering it over the person of the defendant, and directed a verdict for the plaintiff. A verdict to that effect was accordingly rendered and judgment entered thereon, to review which the present writ of error is brought. The instruction given to the jury constitutes the error alleged for a reversal of the judgment.

The statute of Oregon, in force when service of summons was made in the action of *Walker* v. *Magers*, reads as follows, substituting copy of complaint and notice for summons: "The summons shall be served by delivering a copy thereof, together

with a copy of the complaint prepared by the plaintiff, his agent, or attorney, as follows: . . . In all other cases to the defendant, or, if he be not found, to some white person of the family above the age of fourteen years, at the dwelling-house or usual place of abode of the defendant." Statutes of Oregon, 1855, p. 86, sect. 29.

Mr. J. N. Dolph for the plaintiff in error.
Mr. W. Lair Hill, contra.

MR. JUSTICE FIELD, after stating the case, delivered the opinion of the court.

If the certificate of the sheriff were the only document in the record referring to the service of the complaint and notice, there would be no doubt as to the correctness of the ruling of the court below. Service upon the wife of the defendant was not service upon him. No theoretical unity of husband and wife can make service upon one equivalent to service upon the other. Personal citation to the defendant, or his voluntary appearance, is the essential preliminary to a purely personal judgment. The statute of the State in force at the time required service in cases other than those brought against corporations, or persons laboring under some disability, as minors, or as being of unsound mind, to be made by delivering a copy to the defendant personally; or, if he could not be found, to some white person of his family above the age of fourteen years, at his dwelling-house or usual place of abode. If it be admitted that substituted service of this kind upon some other member of the family is sufficient to give the court jurisdiction to render a personal judgment against its head, binding him to the payment of money or damages, it can only be where the condition upon which such service is permissible is shown to exist. The inability of the officer to find the defendant was not a fact to be inferred, but a fact to be affirmatively stated in his return. The substituted service in actions purely *in personam* was a departure from the rule of the common law, and the authority for it, if it could be allowed at all, must have been strictly followed.

Such we find to be the ruling of the Supreme Court of Oregon. In *Trullenger* v. *Todd* (5 Oreg. 39), judgment was entered

by default for want of an answer by the clerk, in vacation, under the act of 1868, upon a certificate of the sheriff that he had served the summons upon the defendant "by delivering a copy thereof to a person of the family above the age of fourteen years, at the dwelling-house or place of abode of the defendant;" and the court held the certificate insufficient to authorize the entry of judgment in not containing the fact that the defendant could not be found. The statute, so far as the manner of service was concerned, was similar to that of 1861, a summons being substituted for the notice. "The statute," said the court, "in providing how service shall be made, evidently implies that when a summons is placed in the hands of an officer for service, that he will use ordinary diligence, at least, to find the party against whom the summons is issued, in order that he may make personal service upon him; but after using ordinary diligence, if he should fail to find such party, constructive service may be made; and when such service is made, the certificate should contain the fact that the party could not be found." The court having thus held the judgment void, the only question left for its determination was whether it could entertain an appeal from it, as a void judgment could be disregarded and treated as a nullity whenever any right was claimed under it, whether set aside or not. It maintained the appeal solely for the purpose of reversing the judgment and thus purging its records.

Here it is contended that the recital in the entry of the default of the defendant in the case in the State court, "that, although duly served with process, he did not come, but made default," is evidence that due service on him was made, notwithstanding the return of the sheriff, and supplies its omission. But the answer is, that the recital must be read in connection with that part of the record which gives the official evidence prescribed by statute. This evidence must prevail over the recital, as the latter, in the absence of an averment to the contrary, the record being complete, can only be considered as referring to the former.

We do not question the doctrine that a court of general jurisdiction acting within the scope of its authority — that is, within the boundaries which the law assigns to it with respect

to subjects and persons — is presumed to act rightly and to have jurisdiction to render the judgment it pronounces, until the contrary appears. But this presumption can only arise with respect to jurisdictional facts, concerning which the record is silent. It cannot be indulged when the evidence respecting the facts is stated, or averments respecting them are made. If the record is silent with respect to any fact which must have been established before the court could have rightly acted, it will be presumed that such fact was properly brought to its knowledge. But if the record give the evidence or make an averment with respect to a jurisdictional fact, it will be taken to speak the truth, and the whole truth, in that regard; and no presumption will be allowed that other and different evidence was produced, or that the fact was otherwise than as averred. "If, for example," to give an illustration from the case of *Galpin* v. *Page* (18 Wall. 866), "it appears from the return of the officer or the proof of service contained in the record that the summons was served at a particular place, and there is no averment of any other service, it will not be presumed that service was also made at another and different place; or if it appear in like manner that the service was made upon a person other than the defendant, it will not be presumed, in the silence of the record, that it was made upon the defendant also."

We are of opinion that the principle here stated applies in this case. The record from the State court showed service upon the wife of the defendant in that case, and not upon the defendant; and in the absence of any finding of the court that other service was made, or the finding of a fact from which other service must necessarily be inferred, none will be presumed. Other service will not be presumed from its assumption in a recital in the entry of a default. It follows that the judgment of the court below must be affirmed; and it is

So ordered.

MR. JUSTICE BRADLEY, with whom concurred MR. CHIEF JUSTICE WAITE and MR. JUSTICE HARLAN, dissenting.

I dissent from the judgment in this case.

The entry of judgment recites that process was duly served.

The return of the sheriff, though it does not state all the facts necessary to make the service good, yet does not contradict the recital; and no allegation was made that the defendant could have been found to be personally served with process. Under these circumstances, I think the judgment cannot be assailed collaterally.

HILL v. NATIONAL BANK.

A., the owner of a parcel of land, consisting of four adjoining lots, three of them having buildings thereon, conveyed it in fee to B. in trust, to secure the payment of certain notes to C. He subsequently used the land and buildings as a paper manufactory, annexing thereto the requisite machinery, and secured by lease a supply of water as a motive-power. Default having been made in paying the notes, B., under the power conferred by the deed, sold the land, excluding therefrom the machinery and water-power therewith connected; and on the ground that they constituted an entirety, and should have been sold together, A., by his bill against C., obtained a decree setting aside said sale. The notes remaining unpaid, C. filed his bill against A. and the lessor of the water-power, to enforce the execution of the trust, and prayed that the land mentioned in said deed, including the fixtures, machinery, and water-power, be sold as an entirety. The court below passed a decree accordingly. A. appealed here. *Held*, 1. That the decree is correct. 2. That the former decree estopped the parties thereto from again litigating the questions thereby decided.

APPEAL from the Supreme Court of the District of Columbia. The facts are stated in the opinion of the court.

Mr. Frederick W. Jones for the appellant.
Mr. Charles M. Matthews, *contra*.

MR. JUSTICE SWAYNE delivered the opinion of the court.

This is a case in equity. On the 15th of January, 1864, Hill executed a deed of trust to Edward Shoemaker, conveying in fee-simple four lots in Georgetown to secure the payment of three promissory notes therein described. The notes were executed by Hill. All of them bore date on the 21st of October, 1863, and were payable to the order of Judson Mitchell and John Davidson. They were each for the sum of $2,210.33, and were to be paid, respectively, at one, two, and three years from date, with interest at the rate of six per cent per annum, to be paid half-yearly. In the event of any default

of payment by Hill, the trustee was authorized to sell the premises for the satisfaction of the debt. The lots were numbered 1, 2, 3, and 4, and were all contiguous. On each of three of the lots there was a brick tenement. Lot 4 was unimproved. The appellant bought the premises with the view of using them for a paper-mill. This purpose he proceeded to carry out. He altered the buildings, put in the requisite machinery, and took a lease of water-power from the Chesapeake and Ohio Canal Company, "to be used at his property at the corners of Potomac and Water Streets" (being the premises in question), "and to be used in propelling the machinery of a paper-mill and appurtenant works." He introduced the water upon the premises, and applied it according to the terms of the lease.

The several notes were duly assigned and transferred to the Farmers' and Mechanics' National Bank. Hill having made default by allowing all the notes to become overdue without payment, the trustee, under the power conferred by the deed, advertised and sold the real estate as it was when the deed was executed, and irrespective of the water-power and the paper-mill machinery. A bill was thereupon filed by Hill to set the sale aside. The Supreme Court of the District sustained the bill and annulled the sale, upon the ground that the realty, the water-power, and the machinery constituted an entirety, and should have been sold together. The court said: "The complainant placed in these structures, at great expense, all the machinery necessary to a paper-mill, and procured from the Chesapeake and Ohio Canal Company a water-power, which he conveyed underground some three or four hundred feet to the mill property, for the purpose of operating the machinery, and also incurred a heavy expense for an underground tail-race, to conduct the water away."

"The great mischief done, as we think, was not in selling the lots together, but in selling them without reference to the fixed machinery and water-power connected therewith." "We are governed in our conclusion in setting this sale aside by the fact that both parties had a right to permanent improvements upon the premises, so far as the same were inalienably fixed upon each other, and that there was no exclusive right of either to divide them."

This bill was thereupon filed by the bank against Hill and the Chesapeake and Ohio Canal Company to enforce the payment of the amount due upon the notes by a decree for the sale of the lots described in the deed of trust, together with the water-power and machinery used upon the premises, if the court should deem that the two latter could be included in the sale. The court below finally decreed "that the said real estate and premises, including said fixtures and machinery, and also said water-power, according as the same are referred to, mentioned, or described in said bill, be sold as an entirety, and as forming and being a paper manufactory, according to a suitable description thereof, to be made for the purpose of a sale by the trustees to be hereinafter appointed to make said sale." This decree was affirmed at the general term. Hill then brought the case here for review, and assigns three errors: —

1. That the court erred in decreeing the sale of lot 4 with the other property.

2. In decreeing the sale of machinery not permanently annexed, without evidence as to the mode, object, and intention of the annexation.

3. In decreeing the sale of the water-power as appurtenant to the land.

The appellant does not deny that the debt is *bona fide;* that it is overdue; that it belongs to the appellee; nor that the decree is for the proper amount. His objections are only those assigned as errors. To all three of them there is a common answer. The points are *res judicatæ* between the parties. In setting aside the sale made by the trustee, upon the appellant's bill filed to bring about that result, the court adjudged, expressly, that the entire premises, including lot 4 and the machinery and water-power, should be sold together as an entirety; and the sale was set aside because it was not so made. The appellant now asks that the decree before us be reversed, because it requires the sale to be made in the manner prescribed in the former case. This cannot be done. The questions raised by the assignments are concluded by the former decree, and both parties are barred from litigating them a second time. Story, Eq. Jur., sect. 1523. The law of estoppel is founded in reason and justice. It makes the acts and con-

duct of a party binding against him whenever it should be so, and will not permit him to assert any claim to the contrary. He thus himself makes the law of his case, and he must abide the consequences. When in the former case the sale by the trustee was challenged by the appellant, he and the appellee were both before the court with their proofs, and the case was fully heard. We have shown the result, and we do not sit here to review or reverse it. The decree upon the points in issue, and decided, is as binding upon the parties as a judgment or decree would be in any other case. Story, Eq. Jur., *supra;* Bigelow, Estoppel, 812–815.

But, irrespective of this consideration, we think the decree appealed from is correct.

It is not questioned that the realty, the water-power, and the machinery constituted a paper-mill. They were therefore, *ex vi termini*, a unit, and could not be disintegrated and the parts sold separately without large depreciation, and a diminished amount in the aggregate of the yield. It is obviously best for all concerned that the property should be sold pursuant to the decree. According to the terms of the lease the water-power could be employed only on the premises, and for driving there a paper-mill. Lot 4 is convenient and important for use in connection with the rest of the property, and hence should be sold with it. That lot is the only vacant and unimproved part of the premises, but it is not on that account the less necessary for various purposes in operating the establishment. *Olcott* v. *Bynum et al.*, 17 Wall. 44. Without the water-power the machinery would be worthless, except to be torn out and removed. By placing it in the buildings in constructing the mill, every part and parcel of it, as between mortgagor and mortgagee, became a fixture and a part of the freehold.

There is some conflict in both the English and American authorities upon this subject; but we think the view we have expressed is the better one, and sustained by the greater weight of authority. The intent and conduct of the mortgagor under the circumstances of this case are conclusive. *Ex parte Astbury*, Law Rep. 4 Ch. 630; *Metropolitan Counties Society* v. *Brown*, 26 Beav. 454; *Christian* v. *Dripps*, 28 Pa. St. 271; *Hill* v. *Sewald*, 53 id. 271; *Seeger* v. *Pettit*, 77 id. 437; *Palmer* v.

Forbes, 28 Ill. 301; *Deal* v. *Palmer*, 72 N. C. 582; *Walmsley* v. *Milne*, 7 C. B. N. S. 115; *Powell* v. *Manufacturing Company*, 3 Mas. 459; *Trull* v. *Fuller*, 28 Me. 545; *Corliss* v. *McLagin*, 29 id. 115; *McKini* v. *Mason*, 8 Md. Ch. 187; *Winslow* v. *Merchants' Insurance Co.*, 4 Metc. (Mass.) 306.

Decree affirmed.

KEITH *v.* CLARK.

1. Where a case has been decided in an inferior court of a State on a single point which would give this court jurisdiction, it will not be presumed here that the Supreme Court of the State decided it on some other ground not found in the record or suggested in the latter court.
2. The State of Tennessee having, in 1838, organized the Bank of Tennessee, agreed, by a clause in the charter, to receive all its issues of circulating notes in payment of taxes; but, by a constitutional amendment adopted in 1865, it declared the issues of the bank during the insurrectionary period void, and forbade their receipt for taxes. *Held*, that the amendment was in conflict with the provision of the Constitution of the United States against impairing the obligation of contracts.
3. There is no evidence in this record that the notes offered in payment of taxes by the plaintiff were issued in aid of the rebellion, or on any consideration forbidden by the Constitution or the laws of the United States; and no such presumption arises from any thing of which this court can take judicial notice.
4. The political society which, in 1796, was organized and admitted into the Union by the name of Tennessee, has to this time remained the same body politic. Its attempt to separate itself from that Union did not destroy its identity as a State, nor free it from the binding force of the Constitution of the United States.
5. Being the same political organization during the rebellion, and since, that it was before, — an organization essential to the existence of society, — all its acts, legislative and otherwise, during the period of the rebellion are valid and obligatory on the State now, except where they were done in aid of that rebellion, or are in conflict with the Constitution and laws of the United States, or were intended to impeach its authority.
6. If the notes which were the foundation of this suit had been issued on a consideration which would make them void for any of the reasons mentioned, it is for the party asserting their invalidity to set up and prove the facts on which such a plea is founded.

ERROR to the Supreme Court of the State of Tennessee.

The facts are stated in the opinion of the court.

Mr. Philip Phillips and *Mr. George Hoadly* for the plaintiff in error.

Mr. J. B. Heiskell, contra.

MR. JUSTICE MILLER delivered the opinion of the court.

The plaintiff in error, who was plaintiff below, sued the defendant for the sum of $40, which he had paid in lawful money under protest for taxes due the State of Tennessee, after he had tendered to the defendant that sum in the circulating notes of the Bank of Tennessee, which defendant refused to receive.

The suit was commenced before a justice of the peace, taken by appeal to the Common-Law Chancery Court of Madison County, and from there to the Supreme Court of Tennessee, and by writ of error from this court it is now before us for review.

In all the trials in the State courts, judgment was rendered against the plaintiff. The jurisdiction of this court is denied again, though it was affirmed in the analogous cases of *Woodruff* v. *Trapnall*, 10 How. 190, and *Furman* v. *Nichol*, 8 Wall. 44.

As the same facts are involved in the question of jurisdiction and the issue on the merits, it may be as well to state them.

They appear in a bill of exceptions taken at the trial on the first appeal, which was a trial *de novo* before a jury. The defendant was a collector of taxes, to whom plaintiff had tendered $40 of the bills of the Bank of Tennessee, which, with other lawful money tendered at the same time, was the amount due. The offer of plaintiff was founded on the twelfth section of the charter of the bank, enacted in 1838 by the legislature of the State, which reads thus:—

"Be it enacted that the bills or notes of the said corporation originally made payable, or which shall have become payable on demand, in gold or silver coin, shall be receivable at the treasury of this State, and by all tax-collectors and other public officers, in all payments for taxes or other moneys due to the State."

It was proved that the bills were issued subsequently to May 6, 1861, and were known as the "Torbet or new issue," and were worth in the brokers' market about twenty-five cents on the dollar.

The court charged the jury that if the notes tendered were issued subsequently to May 6, 1861, and during the existence of the State government established at that date in hostility to

the government of the United States, then defendant was not legally bound to receive them in payment of plaintiff's taxes. And the reason given for this was, that while the Constitution of the United States protected the contract of the section of the charter we have cited from repudiation by State legislation as to notes issued prior to the act of secession of May 6, 1861, it conferred no such protection as to notes issued while the State was an insurrectionary government; and that consequently the provisions of sect. 6 of the schedule to the constitutional amendment of 1865, which declared that all the notes of the bank issued after the date above mentioned were null and void, and forbade any legislature to pass laws for their redemption, was a valid exercise of State authority. On this instruction the jury found a verdict for the defendant.

In the Supreme Court the judgment rendered on this verdict was affirmed, without any opinion or other evidence of the grounds on which it was so affirmed.

There can be no question that the charge of the trial judge to the jury decided against the plaintiff in error a question which gives this court jurisdiction; and this is admitted by counsel, who ask us to dismiss the writ of error.

The ground assumed in support of the motion is, that we ought to presume that the Supreme Court did not decide the question which the court below did, but affirmed the judgment, on the ground that, by the laws of Tennessee, no suit could be brought against the State or against the collector of taxes, and that the justice of the peace who first tried the case, and the court to which the appeal was taken, had no jurisdiction. It would follow, say counsel, that as this was a question of State law, it could not be reviewed in this court.

The answers to this are several and very obvious.

1. Where an appellate court decides a case on the ground that the inferior court had no jurisdiction, it in some mode indicates that it was not a decision on the merits, to prevent the judgment being used as a bar in some court which might have jurisdiction. *Barney* v. *Baltimore City*, 6 Wall. 280; *House et al.* v. *Mullen*, 22 id. 42; *Kendig* v. *Dean*, *supra*, p. 423.

2. In *Tennessee* v. *Sneed* (96 U. S. 69), this court decided that the courts of Tennessee did have the jurisdiction which

this suggestion denies them; and we will not presume, without very strong reason for it, that the Supreme Court of Tennessee disagreed with this court on that point.

3. There is not the slightest evidence in the record, nor any reason to be drawn from it, to believe that the court decided any such question. It nowhere appears that it was raised. Nothing like it is found in the bill of exceptions. There is no plea to the jurisdiction, or motion to dismiss for want of it.

And we are bound by every fair rule of sound construction to hold that the Supreme Court, in affirming the judgment of the court below, did it on the only ground on which that court acted, or which was raised by the record.

That question was, whether the twelfth section of the charter of the bank constituted a contract which brought the issues of the bank after the 6th of May, 1861, within the protective clause of the Constitution of the United States against impairing the obligation of contracts by State laws. Of that question this court has jurisdiction, and we proceed to its consideration.

In *Furman* v. *Nichol* (*supra*), the twelfth section of the charter of the bank — the same now under consideration — was held to constitute a contract between every holder of the circulating notes of the bank and the State of Tennessee, that the State would receive the notes in payment of taxes at their par value. And it was held that the same provision of the State Constitution of 1865, which is relied on here, was void, as impairing the obligation of that contract.

The case of *Woodruff* v. *Trapnall* (*supra*) was referred to as being perfect in its analogy, both in the character of the bank and its relation to the State, and the contract to receive its notes in payment of taxes. In *Furman* v. *Nichol*, however (which is the identical case before us, except that in the former case the notes were issued prior to May 6, 1861), the court, out of abundant caution, said, that it did not consider or decide any thing as to the effect of the civil war on that contract, or to notes issued subsequently to that date. We are invited now to examine that point, and to hold that as to all such notes the twelfth section creates no valid contract.

In entering upon this inquiry we start with the proposition,

that unless there is something in the relation of the State of Tennessee and the bank, after the date mentioned, to the government of the United States, or something in the circumstances under which the notes now sued on were issued, that will repel the presumption of a contract under the twelfth section, or will take the contract out of the operation of the protecting clause of the Federal Constitution; this court has established already that there was a valid contract to receive them for taxes, and that the law which forbade this to be done is unconstitutional and void.

Those who assert the exception of these notes from the general proposition are not very well agreed as to the reasons on which it shall rest, and we must confess that, as they are presented to us, they are somewhat vague and shadowy. They may all, however, as far as we understand them, be classed under three principal heads.

1. The first is to us an entirely new proposition, urged with much earnestness by the counsel who argued the case orally for the defendant.

It is, in substance, that what was called the State of Tennessee prior to the 6th of May, 1861, became, by the ordinance of secession passed on that day, subdivided into two distinct political entities, each of which was a State of Tennessee. One of them was loyal to the Federal government, the other was engaged in rebellion against it. One State was composed of the minority who did not favor secession, the other of the majority who did. That these two States of Tennessee engaged in a public war against each other, to which all the legal relations, rights, and obligations of a public war attached. That the government of the United States was the ally of the loyal State of Tennessee, and the confederated rebel States were the allies of the disloyal State of Tennessee. That the loyal State of Tennessee, with the aid of her ally, conquered and subjugated the disloyal State of Tennessee, and by right of conquest imposed upon the latter such measure of punishment and such system of law as it chose, and that by the law of conquest it had the right to do this. That one of the laws so imposed by the conquering State of Tennessee on the conquered State of Tennessee was this one, declaring that the

issues of the bank during the temporary control of affairs by the rebellious State was to be held void; and that, as conqueror and by right of conquest, the loyal State had power to enact this as a valid law.

It is a sufficient answer to this fanciful theory that the division of the State into two States never had any actual existence; that, as we shall show hereafter, there has never been but one political society in existence as an organized State of Tennessee, from the day of its admission to the Union in 1796 to the present time. That it is a mere chimera to assert that one State of Tennessee conquered by force of arms another State of Tennessee, and imposed laws upon it; and, finally, that the logical legerdemain by which the State goes into rebellion, and makes, while thus situated, contracts for the support of the government in its ordinary and usual functions, which are necessary to the existence of social life, and then, by reason of being conquered, repudiates these contracts, is as hard to understand as similar physical performances on the stage.

2. The second proposition is a modification of this, and deserves more serious attention. It is, as we understand it, that each of the eleven States who passed ordinances of secession and joined the so-called Confederate States so far succeeded in their attempt to separate themselves from the Federal government, that during the period in which the rebellion maintained its organization those States were in fact no longer a part of the Union, or, if so, the individual States, by reason of their rebellious attitude, were mere usurping powers, all of whose acts of legislation or administration are void, except as they are ratified by positive laws enacted since the restoration, or are recognized as valid on the principles of comity or sufferance.

We cannot agree to this doctrine. It is opposed by the inherent powers which attach to every organized political society possessed of the right of self-government; it is opposed to the recognized principles of public international law; and it is opposed to the well-considered decisions of this court.

"Nations or States," says Vattel, "are bodies politic, societies of men united together for the promotion of their mutual safety and advantage by the joint efforts of their combined strength.

Such a society has her affairs and her interests. She deliberates and takes resolutions in common, thus becoming a moral person who possesses an understanding and a will peculiar to herself, and is susceptible of obligations and rights." Law of Nations, sect. 1.

Cicero and subsequent public jurists define a State to be a body political or society of men united together for the purpose of promoting their mutual safety and advantage by their combined strength. Wheaton, International Law, sect. 17. Such a body or society, when once organized as a State by an established government, must remain so until it is destroyed. This may be done by disintegration of its parts, by its absorption into and identification with some other State or nation, or by the absolute and total dissolution of the ties which bind the society together. We know of no other way in which it can cease to be a State. No change of its internal polity, no modification of its organization or system of government, nor any change in its external relations short of entire absorption in another State, can deprive it of existence or destroy its identity. Id., sect. 22.

Let us illustrate this by two remarkable periods in the history of England and France.

After the revolution in England, which dethroned and decapitated Charles I., and installed Cromwell as supreme, whom his successors called a usurper; after the name of the government was changed from the Kingdom of England to the Commonwealth of England; and when, after all this, the son of the beheaded monarch came to his own, treaties made in the interregnum were held valid, — the judgments of the courts were respected, and the obligations assumed by the government were never disputed.

So of France. Her bloody revolution, which came near dissolving the bonds of society itself, her revolutionary directory, her consul, her Emperor Napoleon, and all their official acts, have been recognized by the nation, by the other nations of Europe, and by the legitimate monarchy when restored, as the acts of France, and binding on her people.

The political society which in 1796 became a State of the Union, by the name of the State of Tennessee, is the same

which is now represented as one of those States in the Congress of the United States. Not only is it the same body politic now, but it has always been the same. There has been perpetual succession and perpetual identity. There has from that time always been a State of Tennessee, and the same State of Tennessee. Its executive, its legislative, its judicial departments have continued without interruption and in regular order. It has changed, modified, and reconstructed its organic law, or State Constitution, more than once. It has done this before the rebellion, during the rebellion, and since the rebellion. And it was always done by the collective authority and in the name of the same body of people constituting the political society known as the State of Tennessee.

This political body has not only been all this time a State, and the same State, but it has always been one of the United States, — a State of the Union. Under the Constitution of the United States, by virtue of which Tennessee was born into the family of States, she had no lawful power to depart from that Union. The effort which she made to do so, if it had been successful, would have been so in spite of the Constitution, by reason of that force which in many other instances establishes for itself a status, which must be recognized as a fact, without reference to any question of right, and which in this case would have been, to the extent of its success, a destruction of that Constitution. Failing to do this, the State remained a State of the Union. She never escaped the obligations of that Constitution, though for a while she may have evaded their enforcement.

In *Texas* v. *White* (7 Wall. 700), the first and important question was, whether Texas was then one of the United States, and as such capable of sustaining an original suit in this court by reason of her being such State. And this was at a time when Congress had not permitted her, after the rebellion, to have representatives in either house of that body.

Mr. Chief Justice Chase, in delivering the judgment of the court on this question, says: "The ordinance of secession, adopted by the convention and ratified by a majority of the citizens of Texas, and all the acts of her legislature intended to give effect to that ordinance, were absolutely null. They were utterly without operation in law. The obligations of the State,

as a member of the Union, and of every citizen of the State, as a citizen of the United States, remained perfect and unimpaired. It certainly follows that the State did not cease to be a State, nor her citizens to be citizens, of the Union. If this were otherwise, the State must have become foreign, and her citizens foreigners. The war must have ceased to be a war for the suppression of rebellion, and must have become a war for conquest and subjugation. Our conclusion, therefore, is, that Texas continued to be a State, and a State of the Union, notwithstanding the transactions to which we have referred."

In *White* v. *Hart* (13 id. 646), Mr. Justice Swayne, after a full consideration of the subject, states the result in this forcible language: "At no time were the rebellious States out of the pale of the Union. . . . Their constitutional duties and obligations were unaffected, and remained the same." And he shows by reference to the formula used in the several reconstruction acts, as compared with those for the original admission of new States into the Union, that in regard to the States in rebellion there was a simple recognition of their restored right to representation in Congress, and no readmission into the Union.

These cases, and especially that of *Texas* v. *White*, have been repeatedly cited in this court with approval, and the doctrine they assert must be considered as established in this forum at least.

If the State of Tennessee has through all these transactions been the same State, and has been also a State of the Union, and subject to the obligations of the Constitution of the Union, it would seem to follow that the contract which she made in 1888 to take for her taxes all the issues of the bank of her own creation, and of which she was sole stockholder and owner, was a contract which bound her during the rebellion, and which the Constitution protected then and now, as well as before. Mr. Wheaton says: "As to public debts, — whether due to or from the State, — a mere change in the form of the government, or in the person of the ruler, does not affect their obligation. The essential power of the State, that which constitutes it an independent community, remains the same: its accidental form only is changed. The debts being contracted in the name of the State, by its authorized agents, for its public

use, the nation continues liable for them, notwithstanding the change in its internal constitution. The new government succeeds to the fiscal rights, and is bound to fulfil the fiscal obligations, of the former government." International Law, sect. 80. And the citations which he gives from Grotius and Puffendorf sustain him fully.

We are gratified to know that the Supreme Court of the State of Tennessee has twice affirmed the principles just laid down in reference to the class of bank-notes now in question. In a suit brought by the State of Tennessee, against this very bank of Tennessee, to wind up its affairs and distribute its assets, that court, in April, 1875, decreed, among other things, "that the acts by which it was attempted to declare the State independent, and to dissolve her connection with the Union, had no effect in changing the character of the bank, but that it had the same powers, after as before those acts, to carry on a legitimate business, and that the receiving of deposits was a part of such legitimate business." "That the notes of the bank issued since May 6, 1861, held by Atchison and Duncan, and set out in their answer, are legal and subsisting debts of the bank, entitled to payment at their face value, and to the same priority of payment out of the assets of the bank as the notes issued before May 6, 1861."

At a further hearing of the same case, in January, 1877, that court reaffirmed the same doctrine, and also held that the notes were not subject to the Statute of Limitations, and were not bound by it. *State of Tennessee* v. *The Bank of Tennessee*, not reported. This decision was in direct conflict with schedule 6 of the constitutional amendment of 1865, which declared all issues of the bank after May 6, 1861, void, and it necessarily held that the schedule was itself void as a violation of the Federal Constitution.

3. The third proposition on which the judgment of the courts of Tennessee is supported is, that the notes on which the action is brought were issued in aid of the rebellion, to support the insurrection against the lawful authority of the United States, and are therefore void for all purposes.

The principle stated in this proposition, if the facts of the case come within it, is one which has repeatedly been discussed

by this court. The decisions establish the doctrine that no promise or contract, the consideration of which was something done or to be done by the promisee, the purpose of which was to aid the war of the rebellion or give aid and comfort to the enemies of the United States in the prosecution of that war, is a valid promise or contract, by reason of the turpitude of its consideration.

In *Texas* v. *White* (*supra*), the suit was for the recovery of certain bonds of the United States which, previously to the war, had been issued and delivered to the State of Texas. During the rebellion the legislature of that State had placed these bonds in the hands of a military commission, and they were delivered by that committee to White and Childs, to pay for supplies to aid the military operations against the government. This court held that while the State was still a State of the Union, and her acts of ordinary legislation were valid, it was otherwise in regard to this transaction. As this is the earliest assertion of the doctrine in this court, and this branch of the opinion received the assent of all the members of the court but one, and has been repeatedly cited since with approval, we reproduce a single sentence from it: "It may be said," says the court, "perhaps with sufficient accuracy, that acts necessary to peace and good order among citizens, such, for example, as acts sanctioning and protecting marriage and the domestic relations, governing the course of descents, regulating the conveyance and transfer of property, personal and real, and providing remedies for injuries to person and estate, and other similar acts which would be valid if emanating from a lawful government, must be regarded in general as valid when proceeding from an actual though unlawful government; and that acts in furtherance or support of rebellion against the United States, or intended to defeat the just rights of citizens, and other acts of like nature, must, in general, be regarded as invalid."

In *Hanauer* v. *Doane* (12 Wall. 342), it was held that due-bills, given in purchase of supplies by a purchasing agent of the Confederate States, were void, though in the hands of a third party; and in support of the judgment Mr. Justice Bradley said: "We have already decided, in the case of *Texas* v. *White*, that a contract made in aid of the late rebellion, or in

furtherance and support thereof, is void. The same doctrine is laid down in most of the circuits, and in many of the State courts, and must be regarded as the settled law of the land."

The latest expression of the court on the subject was by Mr. Justice Field, without dissent, in *Williams* v. *Bruffy* (96 U. S. 176), in which the whole doctrine is thus tersely stated: "While thus holding that there was no validity in any legislation of the Confederate States which this court can recognize, it is proper to observe, that the legislation of these States stands on very different grounds. The same general form of government, the same general laws for the administration of justice and the protection of private rights, which had existed in the State prior to the rebellion, remained during its continuance and afterwards. As far as the acts of the States did not impair, or tend to impair, the supremacy of the national authority, or the just rights of the citizens under the Constitution, they are, in general, to be treated as valid and binding." See *Horn* v. *Lockhart et al.*, 17 Wall. 570; *Sprott* v. *United States*, 20 id. 459.

There is, however, in the case before us nothing to warrant the conclusion that these notes were issued for the purpose of aiding the rebellion, or in violation of the laws or the Constitution of the United States. There is no plea of that kind in the record. No such question was submitted to the jury which tried the case. The sole matter stated in defence, either by facts found in the bill of exceptions, or in the decree of the court, is that the bills were issued after May 6, 1861, while the State was in insurrection, and therefore come within the amended Constitution of 1865, declaring them void. The provision of the State Constitution does not go upon the ground that the State bonds and bank-notes, which it declared to be invalid, were issued in aid of the rebellion, but that they were issued by a usurping government, — a reason which we have already demonstrated to be unsound. Not only is there nothing in the Constitution or laws of Tennessee to prove that these notes were issued in support of the rebellion, but there is nothing known to us in public history which leads to this conclusion. The opinion of the Supreme Court, which we have already cited, states that the bank was engaged in a legitimate business at this time, receiving deposits, and otherwise performing the

functions of a bank; and though, as is abundantly evident, willing enough to repudiate these notes as receivable for taxes, that court held them to be valid issues of the bank, in the teeth of the ordinance declaring them void.

It is said, however, that considering the revolutionary character of the State government at that time, we must presume that these notes were issued to support the rebellion.

But while we have the Supreme Court of Tennessee holding that the bank during this time was engaged in a legitimate banking business, we have no evidence whatever that these notes were issued under any new law of the rebel State government, or by any interference of its officers, or that they were in any manner used to support the State government. If this were so, it would still remain that the State government was necessary to the good order of society, and that in its proper functions it was right that it should be supported.

We cannot infer, then, that these notes were issued in violation of any Federal authority.

On the other hand, if the fact be so, nothing can be easier than to plead it and prove it. Whenever such a plea is presented, we can, if it comes to us, pass intelligently on its validity. If issue is taken, the facts can be embodied in a bill of exceptions or some other form, and we can say whether those facts render the contract void. To undertake to assume the facts which are necessary to their invalidity on this record is to give to conjecture the place of proof, and to rest a judgment of the utmost importance on the existence of facts not found in the record, nor proved by any evidence of which this court can take judicial notice. We shall, when the matter is presented properly to us, be free to determine, on all the considerations applicable to the case, whether the notes that may be then in controversy are protected by the provision of the Constitution or not. And that is the only question of which, in a case like the present, we would have jurisdiction.

The judgment of the Supreme Court of Tennessee will, therefore, be reversed, and the case remanded to that court for further proceedings in accordance with this opinion; and it is

So ordered.

MR. CHIEF JUSTICE WAITE, MR. JUSTICE BRADLEY, and MR. JUSTICE HARLAN dissented.

MR. CHIEF JUSTICE WAITE. I am unable to give my assent to the judgment which has just been announced, and while concurring in much of what is said in the opinion of the majority of my brethren, am compelled to differ upon a single point, which, as I think, controls the decision of the case.

It is a conceded fact that the notes on which the suit is brought were issued by the bank while the State was in rebellion against the government of the United States. The bank, although organized for the transaction of a general banking business, was also the fiscal agent of the State. It was established in the name and for the benefit of the State, and the faith and credit of the State were pledged to give indemnity for all losses arising from any deficiency in the funds specifically appropriated as capital. The State was the only stockholder, and entitled to all the profits realized from the business.

It is an historical fact that the banks of the insurgent States, and especially those owned by the States, were used extensively in furtherance of the rebellion, and that all or nearly all their available funds were converted in one way or another into Confederate securities. None of the banks owned by the States survived the rebellion, and few were able to make any considerable showing of valuable assets.

At the close of the war, Congress saw fit to propose for adoption the fourteenth constitutional amendment, in which it was provided that "neither the United States nor any State shall assume or pay any debt or obligation incurred in aid of insurrection or rebellion against the United States, . . . but all such debts, obligations, and claims shall be held illegal and void." This was done June 16, 1866 (14 Stat. 328), and the adoption of this and other amendments by the late insurgent States was afterwards made a condition to their admission to representation in Congress. Id. 429.

On the 26th of June, 1865, before this amendment was proposed, the people of Tennessee in convention assembled ordained that "all laws, ordinances, and resolutions of the usurped State governments, passed on or after the sixth day of May, 1861, pro-

viding for the issuance of State bonds, also all notes of the Bank of Tennessee, or any of its branches, issued after the sixth day of May, 1861, and all debts created or contracted in the name of the State by said authority, are unconstitutional, null, and void, and no legislature shall hereafter have power to pass any act authorizing the payment of said bonds or debts, or providing for the redemption of said notes." This goes somewhat beyond the requirements of the Fourteenth Amendment, but to the extent it is a declaration that the debts of the insurgent State government contracted in aid of the rebellion should not be paid is certainly valid. On the 26th of July, 1866, Congress gave it that effect in the resolution admitting the State "to her relations to the Union." Id. 364.

Every law is presumed to be constitutional. We cannot declare a State law, and especially when in the form of a constitution, repugnant to the Constitution of the United States, unless it is manifestly so. We ought not reverse the judgment of a State court upon a question of Federal law, unless it is clearly wrong. The decisions of the highest court of a State are always entitled to respect in this tribunal, and should not be overruled under our constitutional power of review, except for imperative reasons.

If facts could exist that would support a law or a State constitution, we must presume they did exist when the law was passed or the constitution adopted, and that the action of the legislature or the people was intended to apply to them.

If the bills of the Bank of Tennessee were in fact issued in aid of the rebellion, they are void as obligations of the State. So the Constitution of the United States as amended provides, and so this court has decided in every case, where the question was raised, that has come here since the war closed. As I construe the ordinance of Tennessee, it is an authoritative declaration, in an appropriate form, by the people of the State, who were cognizant of the facts, that all the issues of the bank after May 6, 1861, were in furtherance of the rebellion. In this way the people, in effect, prohibited the tax-collectors and officers of the State from receiving such issues in payment of public dues. This drove the bill-holder to his suit under the act of March 21, 1873, for the recovery of his money. To this suit

the State voluntarily submitted, for the purpose of having the validity of these obligations judicially determined, and in such a suit as, I think, the constitutional ordinance, taken in connection with known historical facts, is entitled at least to the weight of *prima facie* evidence that the declaration it impliedly makes is true. It is evidence that may be rebutted, but, until rebutted, sufficient to justify an officer in refusing to receive the bills as the obligations of the loyal people in payment of dues to the loyal government. If this were an application for a *mandamus* to compel the officer to receive the bills, and his answer was that the bills had been issued in aid of the rebellion, and he was prohibited by the Constitution of the State from receiving them, I cannot but think his answer would be deemed sufficient until overcome by proof. But the statutory remedy which is now being used is only a substitute for that by *mandamus;* and when the defendant, who is a tax-collector, sets up the Constitution of his State as his defence, and shows that the obligations sued upon were incurred while the State was engaged in rebellion against the United States, I think he, at least, puts upon the holder the burden of showing that they were not incurred in aid of the rebellion. The authoritative declarations of the people of a State, made in an appropriate manner under the forms of law, ought to be presumed to be true.

Suppose this were a suit upon a bond of the State issued during the rebellion, would it be insisted that we should reverse the judgment of the State court because it decided upon the faith of the constitutional ordinance that no recovery could be had without proof that the bond was issued for lawful purposes, and not in aid of the Confederacy? Clearly not, I think; and if not, why apply a different rule to suits upon these bills as State obligations incurred during the same time, and capable of being used for the same purposes. This is thought by some of my brethren to require the plaintiff in such an action to prove a negative before he can recover, but in my judgment it only requires him to overcome a *prima facie* case that has been made against him. If a State Constitution is not to be presumed to rest on facts which will support it, rather than such as will not, it seems to me nothing can be presumed.

If the bills of this bank put out after May 6, 1861, were issued in aid of the rebellion; the constitutional ordinance in question, so far as it relates to them, is valid, and can stand; but if not, it is invalid, because prohibited by the Constitution of the United States, as impairing the obligation of contracts. Certainly, therefore, the presumption is that they were issued in aid of the rebellion, and until this presumption is overcome there ought to be, as I think, no recovery.

MR. JUSTICE BRADLEY. The question in this case is so fundamental in its character, that I cannot suffer the opinion of the majority to be read without expressing my earnest dissent from it.

The bank-notes issued by the Bank of Tennessee, which are claimed to be legal tender for taxes, in this case, were issued during the late civil war. Of course, whether they were new bills or old, whilst they were in the possession of the bank they were of no value. Being the obligations of the bank itself, they had no force or value until they were issued and put in circulation, — any more than the note or bond of an individual has value, whilst it is in his possession. In this respect they were totally different from the notes and obligations of others held by the bank. The latter had value when in the bank's possession, and were property. The bills in question were not property. When the bank issued them, then, and only then, they became property, by becoming obligations of the bank.

The issue of these bills, therefore, was the creation of new obligations on the part of the bank; just as much so as if the bank had made its bonds and issued them. And everybody who took them knew this. The thing was not done in a corner. It was known that these bills were of the "new issue," or the "Torbet issue," of the bank.

These bills, being thus new obligations of the bank, were issued for the purpose of raising funds for the bank or its owners. They were not given away. They were promises to pay, delivered to various parties for the sake of the consideration received therefor; and that consideration was sought for and received by the bank for the purpose of being used, — for the purpose, in other words, of furnishing the bank, and thereby

of furnishing its owners, with revenue for carrying on its and their operations and business.

Now, it appears on the record that this bank belongs to the State of Tennessee, and has no private stockholders. The first section of the charter, passed by the legislature in 1838, is in these words: "A bank shall be, and is hereby, established in the name and for the benefit of the State, to be known under the name and style of 'The Bank of Tennessee;' and the faith and credit of the State are hereby pledged for the support of the said bank, and to supply any deficiency in the funds hereinafter specifically pledged, and to give indemnity for all losses arising from such deficiency."

The second section shows how the capital of the bank was constituted: —

"The capital of said bank shall be five millions of dollars, to be raised and constituted as follows: The whole of the common-school fund, . . . as well as the proceeds of the Ocoee lands, shall constitute a part of the capital of the Bank of Tennessee; the surplus revenue on deposit with the State . . . shall also constitute a part of the stock of said bank; and, in addition, . . . a sum shall be raised in specie, or funds convertible into specie at par value, on the faith of the State, sufficient to make the whole capital five millions of dollars," &c.

The sixth and seventh sections provide for the appointment of the directors of the bank, by the nomination of the governor and confirmation of the General Assembly.

The bank thus became the fiscal agent of the State. All its funds and property, all its resources of every kind, belong to the State, subject to the payment of its debts. The State, it is true, according to the decision in *Curran* v. *The State of Arkansas*, has no constitutional authority to appropriate the capital of the bank to the prejudice of its debts; and it is not to be presumed that any lawful government of the State will do so. If it does, there are generally means, under the provisions of the Constitution, for preventing such a result.

The State, then, being the proprietor of the bank, and the latter being the fiscal agent of the State, it follows that the business operations of the bank inure entirely to the benefit of the State. The property and resources which were obtained

by the issue of the bills in question were obtained for the benefit of the State. The bills were issued in the interest and for the benefit of the State.

In pursuance of the idea that the bank was the property of the State, and that the faith of the State was pledged for its obligations, it was provided, by the twelfth section, "that the bills or notes of the said corporation, originally made payable, or which shall have become payable, on demand, in gold or silver coin, shall be receivable at the treasury of this State, and by all tax-collectors and other public officers, in all payments for taxes and other moneys due to the State."

The question in this case is, whether the State government, as reconstructed after the late rebellion, is absolutely and irretrievably bound by the twelfth section to accept for taxes and other public dues the bills issued by the bank when under the control of the insurgent government during the war.

If by the operation of general public law, or of any thing contained in the Constitution of the United States, the reconstructed and lawful government is so bound, it is more than the insurgents themselves ever expected, and more than the loyal people of the State supposed, when in 1865 they met together in convention, and adopted those ordinances and regulations which the changed condition of things required. They then declared that "all laws, ordinances, and resolutions of the usurped State governments, passed on or after the sixth day of May, 1861, providing for the issuance of State bonds, also all notes of the Bank of Tennessee, or any of its branches, issued on or after the sixth day of May, 1861, and all debts created or contracted in the name of the State by such authority, are unconstitutional, null, and void."

In favor of the proposition that the lawful State government, reorganized after the rebellion, is bound to recognize the bills in question, it is contended that the State of Tennessee has always remained the same State; and that unless it be shown affirmatively that its acts and proceedings were intended to aid in the prosecution of the rebellion, they are all valid and binding on the reconstructed State.

The latter proposition I deny. The State can only act by its constituted authorities, — in other words, by its government;

and if that government is a usurping and illegal government, the State itself and the legal government, which takes the place of the usurping government, are not bound by its acts.

In the case before us, the actual government of the State, for the time being, standing behind the direction of the bank, and creating that direction, exercised complete control over the operations of the bank. When the State government was in want of money, or other resources, for its immediate purposes, the bank, in obedience to its will, issued its obligations, and procured what was wanted.

The process by which this was done was equivalent, in the substance of the transaction, to the government issuing its own obligations, and thereby filling its treasury.

In the exigencies of the war, the then government of Tennessee was in need of every possible resource that could be compelled into contribution. It cannot reasonably be doubted that the very object of this extraordinary new issue of bank circulation was intended for the purpose of enabling the government to carry on its operations. The fact that the bills themselves commanded only a fraction of their par value is proof that they were not issued in the regular course of business, but that the proceeds received therefor were destined for other uses than legitimate banking.

But in my view of the case, it is not necessary to invoke any presumptions of this sort, to deny to these bills the quality of legal tender in the payment of taxes imposed by the lawful government of the State. The original contract contained in the charter of the bank, to the effect that its circulation should be receivable in payment of taxes, was based on the consideration that the State, as proprietor of the bank, received the benefit of the circulation, and was pledged for its redemption. Hence it followed, by an almost necessary implication, that it should honor that circulation so far as to take it for cash, when offered in payment of its own taxes. It never could have been the intent or implication that if a usurping government should at any time obtain the control of the State and its finances, including this very fiscal agency, the issues of the bank made during the period of such usurpation should be honored in the same manner.

Now if the position of the majority of the court is correct, that there never was any usurpation of the State government in Tennessee during the late civil war, and that the State had all the time a lawful government of its own (for that is what the argument amounts to), then I concede that the conclusion reached is unavoidable. If this be true, then I do not see why all the obligations issued by the State during the war, whether in the shape of bonds, or certificates of indebtedness or otherwise, are not equally obligatory as these bills. How is it to be proved which of them was issued for carrying on the war, and which were not? Upon the assumption made, they are all *prima facie* valid. But this, of course, is only a collateral consideration.

I deny the assumption that the governments of the insurgent States were lawful governments. I believe, and hold, that they were usurping governments. I understand this to have been the opinion of this court in *Texas* v. *White*, 7 Wall. 700. The very argument in that case is, that whilst the State as a community of people remained a State rightfully belonging to the United States, the government of the State had passed into relations entirely abnormal to the conditions of its constitutional existence. "When the war closed," says Mr. Chief Justice Chase, speaking for the court, "there was no government in the State except that which had been organized for the purpose of waging war against the United States. That government immediately disappeared. The chief functionaries left the State. Many of the subordinate officers followed their example. Legal responsibilities were annulled or greatly impaired." Again he says: "There being then no government in Texas in constitutional relations with the Union, it became the duty of the United States to provide for the restoration of such government." Again, in speaking of the power and duty of Congress to guarantee to each State a republican government, and the necessary right which follows therefrom to decide what government is established in each State, the Chief Justice makes the following quotation from the opinion of Mr. Chief Justice Taney in the case of *Luther* v. *Borden* (7 How. 1), who says: "Under the fourth article of the Constitution, it rests with Congress to decide what government

is the established one in a State. For as the United States guarantee to each State a republican government, Congress must necessarily decide what government is established in the State, before it can determine whether it is republican or not."

Mr. Chief Justice Chase proceeds to say, "This is the language of the late Chief Justice, speaking for this court, in a case from Rhode Island, arising from the organization of opposing governments in that State. And we think that the principle sanctioned by it may be applied with even more propriety to the case of a State deprived of all rightful government, by revolutionary violence; though necessarily limited to cases where the rightful government is thus subverted, or in imminent danger of being overthrown by an opposing government, set up by force within the State."

The actual course of things taken in the seceding States, so fully detailed by the Chief Justice in *Texas* v. *White*, are demonstrative, it seems to me, of the position which I have assumed. The several State governments existing or newly organized at the times when the ordinances of secession were respectively adopted, assumed all the branches of sovereignty belonging to the Federal government. The right to declare war, raise armies, make treaties, establish post-offices and post-roads, impose duties on imports and exports, and every other power of the government of the United States, were usurped by the said State governments, either singly, or in concert and confederacy with the others. They assumed to sever the connection between their respective communities and the government of the United States, and to exercise the just powers belonging to that government. That such governments should be denominated legal State governments in this country, where the Constitution of the United States is and ought to be the supreme law of the land, seems to be most remarkable. The proposition assumes that the connection between the States and the general government is a mere bargain or compact, which, if broken, — though unlawfully broken, — still leaves the States in rightful possession of all their pristine autonomy and authority as States.

I do not so read the constitution of government, under which we live. Our government is a mixed government, partly state,

partly national. The people of the United States, as one great political community, have willed that a certain portion of the government, including all foreign intercourse, and the public relations of the nation, and all matters of a general and national character, which are specified in the Constitution, should be deposited in and exercised by a national government; and that all matters of merely local interest should be deposited in and exercised by the State governments. This division of governmental powers is fundamental and organic. It is not merely a bargain between States. It is part of our fundamental political organization. Any State attempting to violate this constitution of things not only breaks the fundamental law, but, if it establishes a government in conformity with its views, that government is a usurping government, — a revolutionary government, — as much so as would be an independent government set up by any particular county in a State. If the city of New York should set up a separate government independent of the government of the State, it would be a usurping and revolutionary government. It might succeed, and make itself independent, and then there would be a successful revolution. But if it did not succeed, if it were put down, every one would call it a usurping and unlawful government whilst it lasted, and none of its acts would be binding on the lawful government.

I do not mean to say that States are mere counties or provinces. But I do mean to say, that the political relation of the people of the several States to the Constitution and government of the United States is such, that if a State government attempt to sever that relation, and if it actually sever it by assuming and exercising the functions of the Federal government, it becomes a usurping government.

We have always held, it is true, that, in the interests of order and for the promotion of justice, the courts ought to regard as valid all those acts of the State governments which were received and observed as laws for the government of the people in their relations with each other, so far as it can be done without recognizing and confirming what was actually done in aid of the rebellion. This is required by every consideration of justice and propriety. But this is only what is always conceded to the acts and laws of any actual government, however invalid.

The action of all the States, after the rebellion was over, shows that they did not consider the insurrectionary governments as legal governments, nor the laws by them enacted as having any binding force or validity *proprio vigore*. In every case, it is believed, ordinances or laws were passed either adopting the laws passed during the insurrection, with certain exceptions duly specified, or declaring them all to be invalid, with the exception of such as it was deemed proper to retain. This was done in Tennessee. It was done in all the other States.

The proceedings and acts of Congress and the Executive after the war was at an end, having in view the reconstruction of the insurgent States, are all based on the same idea; viz., that the governments of those States when in rebellion were usurping governments, and that their acts were void. The various pardons and proclamations of amnesty, and acts of rehabilitation to citizenship, passed by Congress, all look in the same direction.

In England, at the close of the Commonwealth, and the restoration of Charles II., no act passed during that whole period of twenty years, from 1640 to 1660, was ever received or admitted as law. Not one of them is found in the statute-book. Some laws which were of great public concern, and actual improvements in the legislative code, were re-enacted, and became laws under Charles II.

It is said that the national obligations of the English government, created during the period in question, were recognized by the restored government. But it is well known that this was a matter of compromise and concession. General Monk held the reins in his own hands as commander of the army, and refused to surrender them until all proper measures for insuring the public tranquillity and satisfaction were agreed to. The royalists were glad to get back into power on these terms. As to the public relations of the kingdom, it would have been arrant folly not to have adopted what had been done. Besides the fact that these relations came under the operation of general public law, in which other nations were deeply concerned, — one cardinal rule of which is, that every nation in its relations with other nations is bound by the acts of its actual government, whether legal or *de facto*, — it was the clear interest of the English nation to stand to the public negotiations of Cromwell;

for no English sovereign had ever wielded the sceptre of public affairs with greater ability and energy.

There is nothing, therefore, in this historical instance to support the opinion of the court.

It is undoubtedly true that, when revolutions in governments occur, the new governments do often, as matter of policy, and to prevent individual distress among the citizens, assume the obligations of the governments to which they succeed. But this is done from motives of public policy only, and is not submitted to as a matter of absolute right. Such was clearly the relation of the lawful State governments to the obligations of the usurping governments, at the close of the civil war in this country. They could assume them or not, as they saw fit. In the case before us, the obligation in question was expressly repudiated. And it seems to me that, in addition to the express repudiation of the Convention of 1865, that part of the Fourteenth Amendment of the Constitution of the United States which prohibits the United States or any State to assume or pay any debt or obligation incurred in aid of insurrection or rebellion against the United States, applies to the case.

Whether the community of people constituting the several States remained States during the insurrection is of no consequence to the argument. The question is, whether the State governments were or were not legal governments, and whether the obligations by them assumed are binding upon the lawful government of the State.

That the acts of secession were void, of course no one denies. The civil war was carried on by the United States government to demonstrate their nullity. But neither has that any thing to do with the question as to the validity of the State governments which waged war against the United States, except to make it more certain and indubitable that they were usurping governments.

It seems to me that the attempt to fasten upon the lawful government of Tennessee an obligation to receive as cash bills that were issued under the authority of the usurping government of that State whilst it was engaged in a deadly war against the government of the United States, is calculated to introduce evils of great magnitude; that it will ultimately lead

to the recognition of the war debts of the seceding States, notwithstanding the prohibition of the Fourteenth Amendment of the Constitution. But this I would regard as a far less evil than the establishment of doctrines at war, as I think, with the true principles of our national government, as well as with the established rules of public law.

MR. JUSTICE HARLAN. I dissent altogether from so much of the opinion of the court as declares that the State of Tennessee, as represented by its existing government, is bound to receive, in payment of taxes levied under its authority, the notes of the Bank of Tennessee, issued after May 6, 1861, and during the period when that State was dominated by a revolutionary organization which usurped the functions of the lawful State government.

It is claimed that the obligation of the existing government of Tennessee to receive these bank-notes for taxes arises out of the twelfth section of the bank's charter, granted in 1838, which provides "that the bills or notes of the said corporation, originally made payable, or which shall have become payable, on demand, in gold or silver coin, shall be receivable at the treasury of this State, and by all tax-collectors and other public officers, in all payments for taxes and other moneys due to the State."

The purposes for which the bank was organized, and the relations created between it and the State by its charter, are thus stated in *Furman* v. *Nichol*, 8 Wall. 44.

"The State of Tennessee, through its legislature, in 1838, thought proper to create a bank 'in its name and for its benefit.' It was essentially a State institution. The State owned the capital and received the profits, appointed its directors, and pledged its faith and credit for its support."

It was because the State, through directors of its appointment, had the absolute control of the operations of the bank, owning its capital and enjoying its profits, that it made the agreement contained in the twelfth section of the charter. That agreement unquestionably constituted, as between the State and the holders of the bank's notes, a contract, the obligation of which the State was forbidden by the Federal Con-

stitution to impair. Such was the decision of this court in *Furman* v. *Nichol* (*supra*), as to all bills issued by the bank prior to May 6, 1861. In that case, while expressly waiving any decision of the question as to the liability of the State for bills issued between May 6, 1861, and the date of the restoration of its lawful government, we held that the guaranty contained in the twelfth section of the charter "was, until withdrawn by the State, a contract between the State and every note-holder of the bank," obliging the State to receive for taxes any notes issued prior to May 6, 1861. But it is to be observed that the State which made this contract with note-holders was the State which was represented by the lawful government thereof. The notes which it agreed to receive for taxes were necessarily only those issued by the authority, or under the orders, of directors appointed by that lawful government. It was not an agreement to receive notes issued under the orders of usurping directors, or by directors appointed by, or exercising their functions under, any revolutionary government, which, by violence, should displace the lawful government of the State. Upon the temporary overthrow of the latter government, on the 6th of May, 1861, all the State institutions, including the Bank of Tennessee, were seized by the usurping government, and were thereafter, and until the legal authorities resumed, or were reinstated in the exercise of, their functions, controlled and managed by the usurping government for its own benefit and maintenance. The notes in question were issued under the orders of directors who repudiated all responsibility to the government which made the contract embodied in the twelfth section of the bank charter. If the issue of such notes imposed obligations upon any State government, it was upon the insurgent State government, whose official agents had directed them to be issued. In the very nature of things, and so long as the duty exists to discourage revolution, by maintaining lawfully constituted authority, no obligation could arise against the State government which had been wrongfully displaced, and whose right to control and manage the bank, by directors of its appointment, was not only denied and repudiated, but was forcibly, and for some time successfully, resisted. And this view does no injustice to citizens of Tennessee who received

the notes of the bank in the ordinary course of business. They were aware of the fact that these notes were issued under revolutionary authority. They did not take them upon the credit of the lawful government, or upon any faith they had in its restoration. They took them upon the credit of the usurping State government, under whose authority and for whose benefit they were issued, and which government, at that time, was regarded by the mass of the people of Tennessee as established upon a firm and enduring foundation.

But it is said that this court has frequently decided that the ordinary acts and transactions of the Confederate State governments, which had no direct connection with the support of the insurrection against the authority of the Union, were to be deemed as valid as if they had been the acts and transactions of legitimate legislatures. The argument upon this branch of the case necessarily rests upon the assumption that the notes of the bank issued, under usurping authority, after May 6, 1861, were not issued, or do not appear to have been issued, for the purpose of aiding the insurrection or in hostility to the Union. This assumption, however, cannot be successfully maintained without excluding from consideration well-known historical facts. The government of the Confederate States of America had its origin in the purpose to dissolve the Union formed by the Federal Constitution, and to overthrow the national authority in the States declared to be in insurrection. The revolutionary governments of the insurrectionary States had their origin in, and were formed for, a like purpose. The existence of the former depended upon the existence of the latter. All moneys, therefore, raised by the revolutionary State government, for *its* support and maintenance, may be deemed, in every substantial legal sense, as having been raised for the support and maintenance of the Confederate government in its efforts to overturn the government of the United States. But in the view which I take of this case, and of the principles which must govern its decision, it is immaterial whether the notes were or were not issued in direct aid of the rebellion. They were the obligations of an institution controlled and managed by a revolutionary usurping government, in its name, for its benefit, and to prevent the restoration of the lawful State

government. It was that revolutionary government which undertook to withdraw the State of Tennessee from its allegiance to the Federal government and make it one of the Confederate States. When, therefore, the people of Tennessee, who recognized the authority of the United States, assembled by their delegates in convention, in January, 1865, it was quite natural, and, in my judgment, not in violation of the Federal Constitution, that they should declare, by an amendment of the State Constitution, that "all laws, ordinances, and resolutions of the usurped State governments passed on or after the 6th May, 1861, providing for the issuance of State bonds, also all notes of the Bank of Tennessee, or any of its branches, issued on or after the 6th May, 1861, and all debts created or contracted in the name of the State by said authority, are unconstitutional, null, and void; and no legislature shall hereafter have power to pass any act authorizing the payment of said bonds or debts, or providing for the redemption of said notes." And this amendment of the State Constitution was duly ratified by a popular vote in that State on 22d February, 1865.

After carefully examining the former decisions of this court, and regarding the special facts and circumstances of each case heretofore decided, I do not perceive that any thing declared by us is at all inconsistent with the position that it was competent for the lawful government of Tennessee, when restored to the exercise of its just authority, to refuse to meet the obligations of the usurping State government, or to recognize the notes which had been illegally issued in the name of a State banking institution by the directions, and for the benefit, of the revolutionary organization which had violently displaced the regular and lawful State government. There may be some difficulty in defining precisely what acts of the usurping State government the restored State government should have recognized as valid and binding. It may be true that there were some of them which should, upon grounds of public policy, have been recognized by the lawful government as valid and binding. It may be that, in the absence of any declaration to the contrary by the latter, the courts should recognize certain acts of the revolutionary government as *prima facie* valid. But I am unwilling to give my assent to the doctrine that the Constitution

of the United States imposed upon the lawful government of Tennessee an obligation, which this court must enforce, to cripple its own revenue, by receiving for its taxes bank-notes issued and used, under the authority of the usurping government, for the double purpose of maintaining itself and of defeating the restoration of that lawful government to its proper relations in the Union. Lawful government should not be required to pay the expenses incurred in effecting and maintaining its overthrow. Tennessee, as one of the United States, cannot be under a constitutional duty to recognize the governmental obligations of those who, by revolution, and in violation of the Federal Constitution, overthrew the legitimate State government, not because of its administration of the internal affairs of that State, but solely because of its adherence to the Federal Union, and its refusal to acknowledge the authority of the Confederate government. If the insurrectionary State government had, during the recent war, urged the people in insurrection to take the notes of the Bank of Tennessee at par, upon the ground that the lawful State government, if restored, would be required by the courts of the United States, whose government they were endeavoring to overturn, to receive them in payment of taxes, and if the insurgents had believed such to be the law of the land, the treasury of the Confederate State government would have had more money than it did have to carry on the work of revolution.

Upon these grounds, which I will not further elaborate, I feel obliged to dissent from the conclusions reached by the court.

SPOFFORD v. KIRK.

A. employed B. to collect a claim against the United States. Before its allowance, or the issue of a warrant for its payment, he drew, in favor of C., an order on B., payable out of any moneys coming into his hands on account of said claim. B. accepted it, and D. became the holder of it in good faith and for value. A. refused to recognize its validity after the warrant in his favor had been issued, or to indorse the latter. D. thereupon filed his bill against A. and B. to enforce payment of the order. *Held*, 1. That the order became, upon its acceptance, and in the absence of any statutory prohibition, an equitable assignment *pro tanto* of the claim. 2. That, under the act of Feb. 26, 1863 (10 Stat. 170, re-enacted in sect. 3477, Rev. Stat.), the accepted order was void, and that D. took no interest in the claim, and acquired no lien upon the fund arising therefrom.

APPEAL from the Supreme Court of the District of Columbia.

James B. Kirk employed Hosmer & Co. to prosecute his claim for $12,000 against the United States, for supplies furnished to the army during the war of the rebellion, and for damages sustained by reason of the military occupation of his property. Before the allowance of the claim, he drew upon that firm the following orders: —

"CULPEPER COURT-HOUSE, VA.,
"Jan. 14, 1873.

"Messrs. Hosmer & Co., of Washington City, D. C., will please pay to J. S. Wharton, or order, six hundred ($600) dollars out of whatever moneys may be coming into your hands for me, for supplies furnished and damages sustained by the United States army during the war.

"JAMES B. KIRK."

"CULPEPER COURT-HOUSE, VA.,
"Jan. 14, 1873.

"Messrs. Hosmer & Co., of Washington City, D. C., will please pay to E. R. Taylor, or order, six hundred ($600) dollars out of whatever moneys may be coming into your hands for me, for supplies furnished and damages sustained by the United States army during the war.

"JAMES B. KIRK."

Which were thereupon severally accepted by the drawees, by writing across the face of the first, as follows: —

"WASHINGTON, Jan. 24, 1873.

"Accepted: payment to be made out of any moneys received by us from the United States on the claim of said James B. Kirk, and remaining in our hands, after deduction and payment of attorney's fees in the case.

"HOSMER & Co."

And of the second, as follows:—

"Accepted: payment to be made out of any moneys received by us from the United States on the claim of said James B. Kirk, and remaining after deduction and payment of our attorney's fees in the case, and also our acceptance of a similar order for the same amount in favor of Dr. J. S. Wharton.

"HOSMER & Co.

"Jan. 25, 1873."

The orders bearing said acceptances, and indorsed by the respective payees, were, in February, 1873, offered for sale to Ainsworth R. Spofford, who, on the written assurance of the drawees that Kirk had been allowed by the government something over $9,000, became the assignee or holder of both for value and in entire good faith.

Upon the issue of the treasury warrant for the sum awarded to Kirk, Spofford made demand upon Hosmer & Co. for the payment of the orders. Kirk having refused to indorse the warrant or to admit the validity of the orders, Spofford filed this bill to enforce compliance with said orders and acceptances, and to enjoin Hosmer & Co. from surrendering and Kirk from receiving said warrant.

The court below dismissed the bill, whereupon Spofford appealed here.

Mr. T. A. Lambert for the appellant.

As the orders furnish no evidence of a purpose on the part of Kirk to assign his claim against the United States, they were not drawn in derogation of the act of Feb. 26, 1853, and are not affected by it.

They were designed to clothe the respective payees with the badge of absolute ownership of the amount thereby severally appropriated to them or their assigns, "out of whatever moneys might be coming into the hands of the drawees for the drawer,

for supplies furnished and damages sustained by the United States army during the war." The fund thus designated had but a potential existence, and was wholly unaffected by the orders, until it actually or constructively reached the hands of the drawees. From the moment, however, it came to their possession, they, by reason of their previous acceptance, became clothed with a trust to administer it agreeably to the directions contained in the orders. In other words, the orders, when drawn and accepted, created in equity an absolute and irrevocable appropriation of their contents when collected by the drawees from the drawer's claim against the government, and the sums named were held by Hosmer & Co. in trust for the payees or their assignees. Story, Eq. Jur., sects. 1040–1047; *Mandeville* v. *Welch*, 5 Wheat. 277; *Tiernan et al.* v. *Jackson*, 5 Pet. 580; *Croser* v. *Craig*, 1 Wash. 424; *Mnemony et al.*, *Assignees*, v. *Ferrers*, 3 Johns. (N. Y.) 71; *Weston* v. *Barker*, 12 id. 276; *Morton* v. *Nailor*, 1 Hill (N. Y.), 585; *Burn* v. *Carvalho*, 4 Myl. & Cr. 702, 703; *Row* v. *Dawson*, 1 Ves. 331; *L'Estrange* v. *L'Estrange*, 13 Beav. 284; 2 Spence, Eq. Jur. 855, 860, 861, 907.

The accepted orders constitute a contract which a court of equity will enforce by way of specific performance, and their operation upon the fund attached as soon as the drawees became possessed of the treasury warrant. 2 Spence, Eq. Jur. 852, 854, 865, 866, 896; Story, Eq. Jur., sects. 783, 1040 *b*, 1040 *c*, 1044, 1055; *Wright* v. *Wright*, 1 Ves. 411; *Beckley* v. *Newland*, 2 P. W. 182; *Sydney* v. *Sydney*, 3 id. 276; *Legard* v. *Hodges*, 1 Ves. Jr. 478.

Mr. L. L. Lewis, contra.

1. The orders drawn by Kirk created no lien on the fund subsequently appropriated by Congress for the payment of his claim, and a court of equity was, therefore, without jurisdiction in the case. *Trist* v. *Child*, 21 Wall. 441.

2. So far from being contracts to be specifically executed, they were absolutely null and void by the act of Feb. 26, 1858, 10 Stat. 170.

3. If they were valid for any purpose, the complainant had a plain, adequate, and complete remedy at law.

MR. JUSTICE STRONG delivered the opinion of the court.

Whether the orders, drawn as they were upon a designated fund, made payable to order, and accepted by the drawees, are held by the indorsee free from any equities existing between the payees and the drawer, though the indorsee purchased them without any notice of such equities, is a question which the case does not require us to consider. It has been ably and elaborately argued by the counsel for the appellant, and if the orders could have any legal effect, we might be compelled to answer it. But there is a primary question which must be met and determined before we reach the one principally argued. It is, whether the orders are operative for any purpose. The complainants' case rests upon the assumption that, coupled with the acceptance of the drawees, they created an equitable lien upon the debt due from the United States to the drawer. If they did not, it is plain that the court below had no jurisdiction in equity to grant the relief asked for by the bill. The complainant's only remedy was at law. If they did, it must be because the orders and acceptances amounted to an equitable assignment, *pro tanto*, of the claim of the drawer against the government. The ingenious argument for the appellant is that the orders clothed the respective payees with absolute ownership of the several sums mentioned therein, out of whatever moneys might be coming into the hands of the drawees from the United States for the drawer; and it is said that the fund thus specified was unaffected by the orders, and had only a potential existence in the drawees' hands until it was received by them, but that from the moment of possession they assumed a trust to administer the fund in accordance with the directions given by the orders, having previously accepted them.

Another formal statement of the argument is, that the orders drawn by Kirk upon Hosmer & Co., and accepted by them, created in equity an absolute and irrevocable appropriation of their contents, when collected by the drawees from the drawer's claim against the government, and that when collected the sums named in the orders were held by the drawees in trust for the payees or their assignees. There is no substantial variance in the argument stated in these several forms. However stated, the equitable effect of the orders and accept-

ances, independent of any statutory prohibition, if they had any effect when they were drawn, was to transfer a portion of the drawer's claim against the United States to the payees. After the orders were given and accepted, the drawer could not in a court of equity insist that he was entitled to the entire amount which might subsequently be allowed for his claim. If, instead of two orders, he had given one for the entire sum which might be awarded to him by the government, there can be no doubt that it would have divested his whole interest, and vested it in equity in the person in whose favor the order was drawn. In other words, it would have been an equitable assignment of the claim. How, then, can it be that an order drawn upon the fund, or payable out of it, if accepted, is not a partial assignment? There is nothing in Story's Equity Jurisprudence, sects. 1040 to 1047 inclusive, nor in any of the cases cited by the appellant, inconsistent with our holding that such an order is in equity a partial assignment.

We are brought, then, to the inquiry whether such an assignment of a claim against the United States, made before the claim has been allowed, and before a warrant has been issued for its payment, has any validity, either in law or in equity. The act of Congress approved Feb. 26, 1853 (10 Stat. 170), entitled "An Act to prevent frauds upon the treasury of the United States," re-enacted in sect. 3477 of the Revised Statutes, declares that all transfers and assignments thereafter made of any claim upon the United States, or any part or share thereof or interest therein, whether absolute or conditional, and all powers of attorney, orders, or other authorities for receiving payment of any such claim, or any part or share thereof, shall be absolutely null and void, unless the same shall be freely made and executed in the presence of at least two attesting witnesses after the allowance of such claim, the ascertainment of the amount due, and the issuing of a warrant for the payment thereof. It would seem to be impossible to use language more comprehensive than this. It embraces alike legal and equitable assignments. It includes powers of attorney, orders, or other authorities for receiving payment of any such claim, or any part or share thereof. It strikes at every derivative interest, in whatever form acquired, and incapacitates every

claimant upon the government from creating an interest in the claim in any other than himself.

In *United States* v. *Gillis* (95 U. S. 407), we had occasion to examine this act. We then concluded that it embraced every claim against the United States, however arising, of whatever nature, and wherever and whenever presented. We had not, however, before us the precise question which is here presented. That was the case of a suit by the assignee of a claim in the Court of Claims. We held he could have no standing there. We held also that such an assignee could not prosecute the claim in any court, or before the Treasury Department, against the government. We were not called upon to decide whether such assignments were invalid as between the assignor and the assignee. But if after the claim in this case was allowed, and a warrant for its payment was issued in the claimant's name, as it must have been, he had gone to the treasury for his money, it is clear that no assignment he might have made, or order he might have given, before the allowance would have stood in the way of his receiving the whole sum allowed. The United States must have treated as a nullity any rights to the claim asserted by others. It is hard to see how a transfer of a debt can be of no force as between the transferee and the debtor, and yet effective as between the creditor and his assignee to transmit an ownership of the debt, or create a lien upon it. Yet if that might be, — and we do not propose now to affirm or deny it, — the question remains, whether the act of Congress was not intended to render all claims against the government inalienable alike in law and in equity, for every purpose, and between all parties. The intention of Congress must be discovered in the act itself. It was entitled "An Act to prevent frauds upon the treasury of the United States." It may be assumed, therefore, that such was its purpose. What the frauds were against which it was intended to set up a guard, and how they might be perpetrated, nothing in the statute informs us. We can only infer from its provisions what the frauds and mischiefs had been, or were apprehended, which led to its enactment. One, probably, was the possible presentation of a single claim by more than a single claimant, the original and his assignee, thus raising the danger of paying the claim

twice, or rendering necessary the investigation of the validity of an alleged assignment. Another and greater danger was the possible combination of interests and influences in the prosecution of claims which might have no real foundation, of which the facts of the present case afford an illustration. Within our knowledge there have been claims against the government, interests in which have been assigned to numerous persons, and thus an influence in support of the claims has been brought into being which would not have existed had assignments been impossible. We do not say that the passage of the act was induced by these considerations. It is enough that frauds or wrongs upon the treasury were possible in either of these ways, and it may be that Congress intended to close the door against both. However that may be, the language of the act is too sweeping and positive to justify us in giving it a limited construction. We cannot say, when the statute declares all transfers and assignments of the whole of a claim, or any part or interest therein, and all orders, powers of attorney, or other authority for receiving payment of the claim, or any part thereof, shall be absolutely null and void, that they are only partially null and void, that they are valid and effective as between the parties thereto, and only invalid when set up against the government.

It follows that, in our opinion, the accepted orders under which the appellant claims gave him no interest in the claim of the drawer against the United States, and no lien upon the fund arising out of the claim. His bill was, therefore, rightly dismissed.

Decree affirmed.

MR. JUSTICE FIELD did not sit in this case.

Missouri, Kansas, and Texas Railway Company v. Kansas Pacific Railway Company.

1. Subject to certain reservations and exceptions, the act of Congress of July 1, 1862 (12 Stat. 489), "to aid in the construction of a railroad and telegraph line from the Missouri River to the Pacific Ocean, and to secure to the government the use of the same for postal, military, and other purposes," passed to the companies therein named a present interest in every odd-numbered section of public land, within specified limits, on each side of the lines of their respective roads. When those lines were definitely established, the title of the companies acquired precision, and became attached to such sections.
2. Said act having been amended by that of July 2, 1864 (13 Stat. 356), by substituting words of larger import, the grant must be treated as if it had been thus made originally; and therefore, as against the United States, the title of the companies to the increased quantity of land must be considered as taking effect July 1, 1862.
3. The company now known as the Kansas Pacific Railway Company was one of the companies mentioned in said acts. By the act of July 3, 1866 (14 Stat. 79), it was authorized to designate the general route of its road, and to file a map thereof at any time before Dec. 1, 1866: *Provided*, that, after the filing of the map, the lands along its entire line, so far as designated, should be reserved from sale by the Secretary of the Interior. Within the specified time, the company filed a map designating as such general route a line from Fort Riley to the western boundary of Kansas, by way of the Smoky Hill River. The lands upon this route, embracing, among others, those now in controversy, were accordingly withdrawn from sale; and, in January, 1867, the road was completed for twenty-five miles, approved by the commissioners appointed to examine it, and accepted by the President. *Held*, 1. That the title of the company attaching to those lands by the location of the road, followed by the construction thereof, took effect, by relation, as of the date of the said act of 1862, so as to cut off all intervening claimants, except in the cases where reservations were specially made in it and the amendatory act of 1864. 2. That such reservations operated as limitations upon the grant.
4. It was not within the language or intention of those acts to except from their operation any portion of the odd-numbered sections within the limits specified in either act, for the purpose of thereafter granting them to aid in the construction of other roads.
5. The claim of the Missouri, Kansas, and Texas Railway Company to the lands in controversy arises under the act of July 26, 1866 (14 Stat. 289), under which the route of its road was designated, a map thereof filed, and the road constructed. At that date, the title to the lands along that route, which were covered by the previous grant to the Kansas Pacific Railway Company, had already passed from the United States.
6. Although the rights of said companies are determined by the date of their respective grants, it appears that the location of the Kansas Pacific was earlier than that of the Missouri, Kansas, and Texas road.

ERROR to the Supreme Court of the State of Kansas.

The facts are sufficiently stated in the opinion of the court.

Mr. T. C. Sears and *Mr. Wheeler H. Peckham* for the plaintiff in error.

Mr. John P. Usher and *Mr. Henry Beard, contra.*

MR. JUSTICE FIELD delivered the opinion of the court.

This case involves a determination of the title to about ninety thousand acres of land situated in the State of Kansas, claimed by the two railway corporations which are parties to the suit, under grants from the United States. The plaintiff in the court below, the defendant in error here, the Kansas Pacific Railway Company, was originally known as the Leavenworth, Pawnee, and Western Railroad Company, and is thus designated in the act of Congress of 1862. Subsequently, in 1864, the name was changed to that of the Union Pacific Railroad Company, Eastern Division; and it was afterwards so called in the legislation of Congress until some time in 1869, when it received its present name. 13 Stat. 361; 14 id. 79, 855; 15 id. 348.

The defendant in the court below, the plaintiff in error here, the Missouri, Kansas, and Texas Railway Company, claims the lands under a grant from the United States to the State of Kansas, and by patent from the latter. Both grants were made to aid in the construction of railroads the lines of which were not definitely fixed. In neither of them was there any designation of the lands granted other than that they were to constitute the odd sections within certain specified distances on each side of the roads when located. It becomes essential, therefore, for a proper determination of the rights of the two companies, to consider the terms of their respective grants, and ascertain the time when the title to the lands claimed passed from the government.

The plaintiff, the Kansas Pacific Railway Company, claims under the act passed on the 1st of July, 1862, in aid of the construction of a railroad and a telegraph line from the Missouri River to the Pacific Ocean, and the several acts amendatory thereof or supplementary thereto. That act granted to the company organized under its provisions, for every mile of

road, five sections of public land, designated by odd numbers, on each side of the line of the road, within the limit of ten miles, which were not sold, reserved, or otherwise disposed of by the United States, and to which a pre-emption or homestead claim had not attached at the time the line was definitely fixed. It also provided that whenever the company had completed forty consecutive miles of any portion of its road or telegraph line ready for the service contemplated, the President of the United States should appoint three commissioners to examine the same, and report whether the road and the telegraph line were completed and equipped as required by the act; and upon a favorable report, patents were to issue for the adjacent lands.

The company was required to file in the Department of the Interior its assent to the act within one year after its passage, and to designate the general route of its road as near as might be, and file a map of the same in that department within two years. The Secretary of the Interior was then to withdraw the lands within fifteen miles of the designated route from pre-emption, private entry, and sale; and when any portion of the route was finally located, he was to cause the lands granted to be surveyed and set off as fast as necessary for the purposes mentioned. The President was to designate the initial point of the road, which was to be in the Territory of Nebraska, on the one hundredth meridian west from Greenwich, at which point the eastern branches were to unite. The act contemplated several branches, one of which was to be constructed by the Leavenworth, Pawnee, and Western Railroad Company, the name of which was, as already stated, afterwards changed to that of the Kansas Pacific Railway Company. It authorized this company, which was incorporated by the State of Kansas, to construct a railroad and a telegraph line from the Missouri River at the mouth of the Kansas River, on the south side thereof, so as to connect with the Pacific Railroad of Missouri at the initial point named, upon the same conditions in all respects as were provided for the construction of the main road and line. In case the general route of the main road was located so as to require a departure northwardly from the proposed line of the Kansas

road before it reached the meridian of longitude mentioned, the location of the Kansas road was to be made to conform to it. The route in Kansas, west of the meridian of Fort Riley to the point mentioned on the one hundredth meridian of longitude, was to be made subject to the approval of the President of the United States, and to be determined by him on actual survey.

Under this act, the plaintiff, on the 17th of July, 1862, filed a map showing the general route of its road; and lands within the limit of fifteen miles on each side of it were accordingly withdrawn from sale. This route extended along the Kansas River, from its mouth to the Republican River, and thence along the left bank of the latter to the one hundredth meridian.

On the 2d of July, 1864, Congress passed an amendatory act, enlarging its grant of land to the Union Pacific Railroad Company, and the companies authorized to connect with its road, and the limits within which the lands were to be reserved; and extending for one year the time for designating the general routes of their respective roads, and providing for the issue to the companies of patents for the lands whenever twenty consecutive miles of their respective roads were found upon the report of the commissioners to be completed. It also authorized the plaintiff to construct its road and telegraph line so as to connect with the Union Pacific road at a point west of its initial point, in case it deemed such westward connection more practicable or desirable. Under this amendatory act the plaintiff filed a map designating the general route of its road west of Fort Riley up the Republican River; but this route was never approved by the President, as required by the original act of 1862; and no withdrawal of lands along this proposed route was made, other than that of July, 1862; and of the lands then withdrawn west of Fort Riley only such are claimed by the plaintiff as were included in the subsequent withdrawal under the act of 1866.

On the 3d of July, 1866, Congress passed a special act authorizing the plaintiff to designate the general route of its road, and to file a map thereof, at any time before the 1st of December, 1866, and providing that after the filing of this map

the lands along its entire line, so far as it was designated, should be reserved from sale by the Secretary of the Interior. It also declared that the company should connect its lines of road and telegraph with the Union Pacific road, at a point not more than fifty miles westwardly from the meridian of Denver, in Colorado. Under this act the plaintiff, on the 11th of July, 1866, filed a map in the Department of the Interior, designating as the general route of its road a line from Fort Riley to the western line of the State, by way of the Smoky Hill River, instead of the Republican River; and on the 26th of the same month the lands upon this route were withdrawn from sale, by order of the Secretary of the Interior. The lands thus withdrawn embrace those in controversy in this case. Previously to this the road of the company had been completed as far as Fort Riley; and by the 14th of December following (1866), twenty miles west of Fort Riley, and on the Smoky Hill route, were also completed. Upon the presentation of an affidavit of this fact, the President appointed commissioners to examine and report upon the road. Before they made their examination, a section of five additional miles of the road had been completed, and they were directed to include it in their examination. On the 17th of January, 1867, they reported to the Secretary of the Interior that the twenty-five miles were ready for service, and were completed and equipped as a first-class road. On the 22d of that month, the Secretary informed the President of the report, and recommended its acceptance, and the issue of patents for the lands due the company on account of this completed portion of the road; and on the same day the President approved the report, and directed that patents be issued as recommended by the Secretary.

Upon this order and the legislation we have stated, and the proceedings had under it, the plaintiff bases its right to the lands in controversy, and a consequent affirmance of the decision of the court below.

Briefly stated, the case of the plaintiff is this: In 1862, Congress granted to it certain lands consisting of odd sections along a railroad to be afterwards constructed; in 1864, Congress enlarged the grant, and by subsequent legislation authorized the

route of the road to be designated at any time before December, 1866; when designated, lands within a limit sufficiently extended to embrace the granted sections were to be reserved from sale; and when certain portions of the road were from time to time completed, and were accepted by the President as a first-class road, patents for the sections were to be issued to the company. The plaintiff designated the route of its road in July, 1866, and the lands in controversy were, on the 26th of that month, reserved from sale. By the 14th of December following, it had completed twenty miles of its road, and by the 16th of January, 1867, five additional miles. Commissioners were appointed by the President to examine and report as to the completion and equipment of the road; and upon their favorable report this section of twenty-five miles was accepted by him, and a patent for the lands was ordered to be issued. The plaintiff, therefore, claims that it acquired a title to the lands, and has a right to the evidence of it. And this claim is clearly well founded, unless there be something impairing its validity in the legislation and proceedings under which the defendant asserts title to the lands.

As between the United States and the plaintiff, the right of the latter to a patent became perfect on the approval by the President of the report of the commissioners. The act of July 1, 1862, passed to the company a present interest in the lands to be designated within the limits there specified. Its language is, "that there be and is hereby granted" to it the odd sections mentioned, — words which import a grant *in præsenti* and not one *in futuro*, or the promise of a grant. Similar terms in other acts of Congress granting lands have uniformly received this interpretation, unless accompanied with clauses restraining their operation. They were so interpreted in *Schulenberg* v. *Harriman*, after full consideration of previous adjudications on their import; and the ruling there was followed in *Leavenworth, Lawrence, & Galveston Railroad Co.* v. *United States*, 92 U. S. 733. It is true that the route of the road, in this case as in those cases, to aid in the construction of which the act was passed, was to be afterwards designated; and until designated the title could not attach to any specific tracts. The grant was of sections to be afterwards located,

and their location depended upon the route to be established; when that was settled, the location became certain, and the title that was previously imperfect acquired precision and attached to the lands.

It is always to be borne in mind, in construing a congressional grant, that the act by which it is made is a law as well as a conveyance, and that such effect must be given to it as will carry out the intent of Congress. That intent should not be defeated by applying to the grant the rules of the common law, which are properly applicable only to transfers between private parties. To the validity of such transfers it may be admitted that there must exist a present power of identification of the land; and that where no such power exists, instruments, with words of present grant, are operative, if at all, only as contracts to convey. But the rules of the common law must yield in this, as in all other cases, to the legislative will.

As to the intent of Congress in the grant to the plaintiff there can be no reasonable doubt. It was to aid in the construction of the road by a gift of lands along its route, without reservation of rights, except such as were specifically mentioned, the location of the route being left within certain general limits to the action of the plaintiff. When the location was made and the sections granted ascertained, the title of the plaintiff took effect by relation as of the date of the act, except as to the reservations mentioned; the act having the same operation upon the sections as if they had been specifically described in it. It is true that the act of 1864 enlarged the grant of 1862; but this was done, not by words of a new and an additional grant, but by a change of words in the original act, substituting for those there used words of larger import. This mode was evidently adopted that the grant might be treated as if thus made originally; and therefore, as against the United States, the title of the plaintiff to the enlarged quantity, with the exceptions stated, must be considered as taking effect equally with the title to the less quantity as of the date of the first act. *United States* v. *Burlington & Missouri Railroad Co.*, 4 Dill. 305.

The construction thus given to the grant in this case is, of

course, applicable to all similar congressional grants, and there is a vast number of them; and it will tend, we think, to prevent controversies between the grantees and those claiming under them respecting the title to the lands covered by their several grants, and put an end to struggles to encroach upon the rights of others by securing an earlier location. Our judgment is that the title of the plaintiff, attaching to the lands in controversy by a location of the route of the road, being followed by a construction of the road, took effect by relation as of the date of the act of 1862, so as to cut off all intervening claimants except in the cases where reservations were specially made in that act, and the amendatory act of 1864. Such reservations operated as limitations upon the grant. The limitation upon the grant in the act of July, 1862, extended to lands sold, reserved, or otherwise disposed of by the United States, or to which a pre-emption or homestead claim had attached, and to mineral lands. The amendatory act of July, 1864, declared that neither that nor the original act should defeat or impair any pre-emption, homestead, swamp land, or other lawful claim, or include reservations or mineral lands other than those of iron or coal.

As the sections mentioned could only be known when the route of the road was established, which might not be for years, the government did not intend to withhold the lands in the mean time from occupation and sale, and thus retard the settlement of the country, nor to exclude the lands from appropriation to public uses. And the object of the reservation was to protect the acquisition of rights in this way to lands falling within the limits of the grant, and to exclude from its operation lands specially reserved, and lands of a special character, such as mineral lands other than those of iron or coal, the sale of which was seldom permitted anywhere, and swamp lands. The grant made was in the nature of a float, and the reservations excluded only specific tracts to which certain interests had attached before the grant had become definite, or which had been specially withheld from sale for public uses, and tracts having a peculiar character, such as swamp lands, or mineral lands the sale of which was then against the general policy of the government. It was not

within its language or purpose to except from its operation any portion of the designated lands for the purpose of aiding in the construction of other roads.

The claim of title to the lands in controversy made by the defendant in the court below, the plaintiff in error here, the Missouri, Kansas, and Texas Railway Company, arises in this wise: On the 3d of March, 1863, Congress passed an act granting lands to the State of Kansas to aid in the construction of certain railroads, one of which was to extend from the city of Atchison *via* Topeka, the capital of the State, to its western line in the direction of Fort Union and Santa Fé, New Mexico, with a branch down the Neosho Valley to a point where the Leavenworth and Lawrence road entered it. In accepting the act in February, 1864, the legislature of Kansas enacted that if Congress, before the 4th of March, 1866, should consent that the Neosho Valley branch of the road be extended so as to intersect the Union Pacific road, eastern division, at or near Fort Riley, and should make a grant of lands for such extension of like amount with that granted per mile for the construction of the main road, then the Atchison, Topeka, and Santa Fé Railroad Company should proceed to construct such branch. The act thus suggested Congress did not pass; but on the 1st of July, 1864, it did pass an act making an additional grant of land for the construction of a railroad and a telegraph line from Emporia, *via* Council Grove, to a point near Fort Riley, on the branch of the Union Pacific Railroad. The grant was subject to all the provisions, restrictions, limitations, and conditions in regard to the selection and location of the lands, and otherwise, of the act of March 3, 1863, 18 Stat. 339. Afterwards, the Atchison, Topeka, and Santa Fé Railroad Company, with the assent of the State, transferred all its interest in the grant to the defendant in this case, the Missouri, Kansas, and Texas Railway Company, — a company which was originally known as the Union Pacific Railroad Company, Southern Branch, and is so designated in the act of July 26, 1866, which we shall presently consider. This act of 1864 was never accepted by the State of Kansas. No route of a road between the points designated in it was ever located by the company, nor was any map of a proposed route ever

filed in the Department of the Interior. Nothing, indeed, was done by the State or company under the act until after the grant it offered had been superseded by the acceptance of the greater and more valuable grant made by the subsequent act of July 26, 1866, which covered the same lands. 14 Stat. 289. This last act granted to the State of Kansas, for the purpose of aiding the company to construct and operate a railroad from Fort Riley, or near that military reservation, down the valley of the Neosho River, to the southern line of the State, five alternate sections of land per mile on each side of the road, with a clause that in case it should appear, among other things, when the line of the road was definitely fixed, that any section or part of a section granted had been reserved by the United States for any purpose whatever, then an equal amount of land was to be selected from the public lands nearest the section, and with a proviso excepting from the operation of the act all lands previously reserved to the United States by act of Congress or other competent authority, for the purpose of aiding in any object of internal improvement.

The grant thus made was accepted by the company in August, 1866, and its acceptance was filed in the Department of the Interior. In September following, the line of the proposed road was surveyed, and a map of its route prepared; in November, 1866, it was filed in the office of the Secretary of State of Kansas, and in December following in the office of the Secretary of the Interior. In March, 1867, the adjacent lands were withdrawn from sale to meet the grant, and in June, 1870, the road of the company was completed to the southern line of the State, and soon afterwards was accepted as a first-class road by the governor of the State and by the President.

Upon the principle already announced, in considering the time when the grant to the plaintiff took effect, the title of the defendant to the lands thus set apart to it, had there been no previous disposition or reservation of them, would have become perfect, and by relation have vested from the date of the act. But so far as the lands were identical with those covered by the previous grant to the plaintiff by the acts of 1862 and

1864, the title could not attach, as it had already passed from the government.

The rights of the contesting corporations to the disputed tracts are determined by the dates of their respective grants, and not by the dates of the location of the routes of their respective roads, although in this case the location of the route of the plaintiff's road was earlier than that of the defendant's road. This consideration disposes of the case, and requires the affirmance of the decree of the Supreme Court of Kansas, without reference to the reservations contained in the grant to the defendant.

Decree affirmed.

PATTERSON v. KENTUCKY.

1. Where, by the application of the invention or discovery for which letters-patent have been granted by the United States, tangible property comes into existence, its use is, to the same extent as that of any other species of property, subject, within the several States, to the control which they may respectively impose in the legitimate exercise of their powers over their purely domestic affairs, whether of internal commerce or of police.
2. A party to whom such letters-patent were, in the usual form, issued for "an improved burning oil," whereof he claimed to be the inventor, was convicted in Kentucky for there selling that oil. It had been condemned by the State inspector as "unsafe for illuminating purposes," under a statute requiring such inspection, and imposing a penalty for selling or offering to sell within the State oils or fluids, the product of coal, petroleum, or other bituminous substances, which can be used for such purposes, and which have been so condemned. It was admitted on the trial that the oil could not, by any chemical combination described in the specification annexed to the letters-patent, be made to conform to the standard prescribed by that statute. *Held*, that the enforcement of the statute interfered with no right conferred by the letters-patent.

ERROR to the Court of Appeals of the State of Kentucky.

The facts are stated in the opinion of the court.

Mr. Matt. H. Carpenter for the plaintiff in error.

Mr. Albert Pike, contra.

MR. JUSTICE HARLAN delivered the opinion of the court.

Whether the final judgment of the Court of Appeals of

Kentucky denies to plaintiff in error any right secured to her by the Constitution and laws of the United States, is the sole question presented in this case for our determination.

That court affirmed the judgment of an inferior State court in which, upon indictment and trial, a fine of $250 was imposed upon plaintiff in error for a violation of certain provisions of a Kentucky statute, approved Feb. 21, 1874, regulating the inspection and gauging of oils and fluids, the product of coal, petroleum, or other bituminous substances. The statute provides that such oils and fluids, by whatever name called and wherever manufactured, which may or can be used for illuminating purposes, shall be inspected by an authorized State officer, before being used, sold, or offered for sale. Such as ignite or permanently burn at a temperature of 130° Fahrenheit and upwards are recognized by the statute as standard oils, while those which ignite or permanently burn at a less temperature are condemned as unsafe for illuminating purposes. Inspectors are required to brand casks and barrels with the words "standard oil," or with the words "unsafe for illuminating purposes," as inspection may show to be proper. The statute imposes a penalty upon all who sell or offer for sale, within the State, such oils and fluids as have been condemned, the casks or barrels containing which have been branded with the words indicating such condemnation.

The specific offence charged in the indictment was that the plaintiff in error had sold, within the State, to one Davis an oil known as the Aurora oil, the casks containing which had been previously branded by an authorized inspector with the words "unsafe for illuminating purposes." That particular oil is the same for which, in 1867, letters-patent were granted to Henry C. Dewitt, of whom the plaintiff in error is the assignee, by assignment duly recorded as required by the laws of the United States. Upon the trial of the case it was agreed that the Aurora oil could not, by any chemical combination described in the patent, be made to conform to the standard or test required by the Kentucky statute as a prerequisite to the right, within that State, to sell, or to offer for sale, illuminating oils of the kind designated.

The plaintiff in error, as assignee of the patentee, in asserting the right to sell the Aurora oil in any part of the United States, claims that no State could, consistently with the Federal Constitution and the laws of Congress, prevent or obstruct the exercise of that right, either by express words of prohibition, or by regulations which prescribed tests to which the patented article could not be made to conform.

The Court of Appeals of Kentucky held this construction of the Constitution and the laws of the United States to be inadmissible, and in that opinion we concur.

Congress is given power to promote the progress of science and the useful arts. To that end it may, by all necessary and proper laws, secure to inventors, for limited times, the exclusive right to their inventions. That power has been exerted in the various statutes prescribing the terms and conditions upon which letters-patent may be obtained. It is true that letters-patent, pursuing the words of the statute, do, in terms, grant to the inventor, his heirs and assigns, the exclusive right to make, use, and vend to others his invention or discovery, throughout the United States and the Territories thereof. But, obviously, this right is not granted or secured, without reference to the general powers which the several States of the Union unquestionably possess over their purely domestic affairs, whether of internal commerce or of police. "In the American constitutional system," says Mr. Cooley, "the power to establish the ordinary regulations of police has been left with the individual States, and cannot be assumed by the national government." Cooley, Const. Lim. 574. While it is confessedly difficult to mark the precise boundaries of that power, or to indicate, by any general rule, the exact limitations which the States must observe in its exercise, the existence of such a power in the States has been uniformly recognized in this court. *Gibbons* v. *Ogden*, 9 Wheat. 1; *License Cases*, 5 How. 504; *Gilman* v. *Philadelphia*, 3 Wall. 713; *Henderson et al.* v. *Mayor of the City of New York et al.*, 92 U. S. 259; *Railroad Company* v. *Husen*, 95 id. 465; *Beer Company* v. *Massachusetts*, *supra*, p. 25. It is embraced in what Mr. Chief Justice Marshall, in *Gibbons* v. *Ogden*, calls that "immense mass of legislation" which can be most advantageously exercised by the States, and

over which the national authorities cannot assume supervision or control. "If the power only extends to a just regulation of rights, with a view to the due protection and enjoyment of all, and does not deprive any one of that which is justly and properly his own, it is obvious that its possession by the State, and its exercise for the regulation of the property and actions of its citizens, cannot well constitute an invasion of national jurisdiction or afford a basis for an appeal to the protection of the national authorities." Cooley, Const. Lim. 574. By the settled doctrines of this court the police power extends, at least, to the protection of the lives, the health, and the property of the community against the injurious exercise by any citizen of his own rights. State legislation, strictly and legitimately for police purposes, does not, in the sense of the Constitution, necessarily intrench upon any authority which has been confided, expressly or by implication, to the national government. The Kentucky statute under examination manifestly belongs to that class of legislation. It is, in the best sense, a mere police regulation, deemed essential for the protection of the lives and property of citizens. It expresses in the most solemn form the deliberate judgment of the State that burning fluids which ignite or permanently burn at less than a prescribed temperature are unsafe for illuminating purposes. Whether the policy thus pursued by the State is wise or unwise, it is not the province of the national authorities to determine. That belongs to each State, under its own sense of duty, and in view of the provisions of its own Constitution. Its action, in those respects, is beyond the corrective power of this court. That the statute of 1874 is a police regulation within the meaning of the authorities is clear from our decision in *United States* v. *Dewitt*, 9 Wall. 41. By the internal revenue act of March 2, 1867, a penalty was imposed upon any person who should mix for sale naphtha and illuminating oils, or who should knowingly sell or keep for sale, or offer for sale, such mixture, or who should sell or offer for sale oil made from petroleum for illuminating purposes, inflammable at less temperature or fire-test than 110° Fahrenheit. We held that to be simply a police regulation, relating exclusively to the internal trade of the States; that, although emanating from Congress, it could have by its

own force no constitutional operation within State limits, and was without effect, except where the legislative authority of Congress excluded, territorially, all State legislation, as, for example, in the District of Columbia.

The Kentucky statute being, then, an ordinary police regulation for the government of those engaged in the internal commerce of that State, the only remaining question is, whether, under the operation of the Federal Constitution and the laws of Congress, it is without effect in cases where the oil, although condemned by the State as unsafe for illuminating purposes, has been made and prepared for sale in accordance with a discovery for which letter-patents had been granted. We are of opinion that the right conferred upon the patentee and his assigns to use and vend the corporeal thing or article, brought into existence by the application of the patented discovery, must be exercised in subordination to the police regulations which the State established by the statute of 1874. It is not to be supposed that Congress intended to authorize or regulate the sale, within a State, of tangible personal property which that State declares to be unfit and unsafe for use, and by statute has prohibited from being sold or offered for sale within her limits. It was held by Chief Justice Shaw to be a settled principle, "growing out of the nature of well-ordered society, that every holder of property, however absolute and unqualified may be his title, holds it under the implied liability that his use of it shall not be injurious to the equal enjoyment of others having an equal right to the enjoyment of their property, nor injurious to the rights of the community." *Commonwealth* v. *Alger*, 7 Cush. (Mass.) 53. In recognition of this fundamental principle, we have frequently decided that the police power of the States was not surrendered when the Constitution conferred upon Congress the general power to regulate commerce with foreign nations and between the several States. Hence the States may, by police regulations, protect their people against the introduction within their respective limits of infected merchandise. "A bale of goods upon which the duties have or have not been paid, laden with infection, may be seized under health laws, and if it cannot be purged of its poison, may be committed to the flames." *Gilman* v. *Philadelphia*, *supra*.

So may the States, by like regulations, exclude from their midst not only convicts, paupers, idiots, lunatics, and persons likely to become a public charge, but animals having contagious diseases. *Railroad Company* v. *Husen*, *supra*. This court has never hesitated, by the most rigid rules of construction, to guard the commercial power of Congress against encroachment in the form or under the guise of State regulation, established for the purpose and with the effect of destroying or impairing rights secured by the Constitution. It has, nevertheless, with marked distinctness and uniformity, recognized the necessity, growing out of the fundamental conditions of civil society, of upholding State police regulations which were enacted in good faith, and had appropriate and direct connection with that protection to life, health, and property, which each State owes to her citizens. These considerations, gathered from the former decisions of this court, would seem to justify the conclusion that the right which the patentee or his assignee possesses in the property created by the application of a patented discovery must be enjoyed subject to the complete and salutary power with which the States have never parted, of so defining and regulating the sale and use of property within their respective limits as to afford protection to the many against the injurious conduct of the few. The right of property in the physical substance, which is the fruit of the discovery, is altogether distinct from the right in the discovery itself, just as the property in the instruments or plate by which copies of a map are multiplied is distinct from the copyright of the map itself. *Stephens* v. *Cady*, 14 How. 528; *Stevens* v. *Gladding et al.*, 17 id. 447. The right to sell the Aurora oil was not derived from the letters-patent, but it existed and could have been exercised before they were issued, unless it was prohibited by valid local legislation. All which they primarily secure is the exclusive right in the discovery. That is an incorporeal right, or, in the language of Lord Mansfield in *Miller* v. *Taylor* (4 Burr. 2303), "a property in notion," having "no corporeal tangible substance." Its enjoyment may be secured and protected by national authority against all interference; but the use of the tangible property which comes into existence by the application of the discovery is not beyond the control of State legisla-

tion, simply because the patentee acquires a monopoly in his discovery.

An instructive case upon the precise point under consideration is *Jordan* v. *The Overseers of Dayton*, 4 Ohio, 295. Jordan was sued in debt, to recover certain penalties for practising medicine in violation of an Ohio statute regulating the practice of physic and surgery. His defence rested, in part, upon the ground that the medicine administered by him was that for which letters-patent had issued to his assignor, granting to the latter the exclusive right of making, constructing, using, and vending to others to be used, the medicine in question, which was described in the letters-patent as a new and useful improvement, and as being a mode of preparing, mixing, compounding, administering, and using that medicine. The contention of Jordan was that the State government could not restrict or control the beneficial or lucrative use of the invention, and that, as assignee of the patentee, he was entitled to administer the patented medicine without obtaining a license to practise physic or surgery as required by the State statute. The Supreme Court of Ohio said: "This leads us to consider the nature and extent of such rights as accrue from letters-patent for useful discoveries. Although the inventor had at all times the right to enjoy the fruits of his own ingenuity, in every lawful form of which its use was susceptible, yet, before the enactment of the statute, he had not the power of preventing others from participating in that enjoyment to the same extent with himself; so that, however the world might derive benefit from his labors, no profit ensued to himself. The ingenious man was therefore led either to abandon pursuits of this nature, or to conceal his results from the world. The end of the statute was to encourage useful inventions, and to hold forth, as inducements to the inventor, the exclusive use of his inventions for a limited period. The sole operation of the statute is to enable him to prevent others from using the products of his labors except with his consent. But his own right of using is not enlarged or affected. There remains in him, as in every other citizen, the power to manage his property, or give direction to his labors, at his pleasure, subject only to the paramount claims of society, which requires that his enjoyment may be

modified by the exigencies of the community to which he belongs, and regulated by laws which render it subservient to the general welfare, if held subject to State control. If the State should pass a law for the purpose of destroying a right created by the Constitution, this court will do its duty; but an attempt by the legislature, in good faith, to regulate the conduct of a portion of its citizens, in a matter strictly pertaining to its internal economy, we cannot but regard as a legitimate exercise of power, although such law may sometimes indirectly affect the enjoyment of rights flowing from the Federal government." Some light is thrown upon the question by *Vanini et al.* v. *Paine et al.*, 1 Harr. (Del.) 65. In that case it appears that Yates and McIntyre were assignees of Vanini, the inventor and patentee of a mode of drawing lotteries, and making schemes for lotteries on the combination and permutation principle. Other brokers issued a scheme for drawing a lottery under a certain act for the benefit of a school, adopting the plan of Vanini's patent. Yates & McIntyre filed their bill for injunction upon the ground, partly, that the defendants were proceeding in violation of the patent-rights secured to Vanini. The Court of Errors and Appeals of Delaware said: "At the times Yates & McIntyre made contracts for the lottery privileges set forth in the bill, we had, in force, an act of assembly prohibiting lotteries, the preamble of which declares that they are pernicious and destructive to frugality and industry, and introductive of idleness and immorality, and against the common good and general welfare. It therefore cannot be admitted that the plaintiffs have a right to use an invention for drawing lotteries in this State, merely because they have a patent for it under the United States. A person might with as much propriety claim a right to commit murder with an instrument, because he held a patent for it as a new and useful invention."

In *Livingston* v. *Van Ingen* (9 Johns. (N.Y.) 507), Chancellor Kent said that "the national power will be fully satisfied if the property created by patent be, for the given time, enjoyed and used exclusively, *so far* as, under the laws of the several States, the property shall be deemed for toleration. There is no need of giving this power any broader construction in order to

attain the end for which it was granted, which was to reward the beneficent efforts of genius, and to encourage the useful arts." That case, so far as it related to the validity, under the commercial clause of the Constitution, of certain statutes of New York, is not now recognized as authority. It is, perhaps, also true that the language just quoted was not absolutely necessary to the decision of that case. But as an expression of opinion by an eminent jurist as to the nature and extent of the rights secured by the Federal Constitution to inventors, it is entitled to great weight.

Without further elaboration, we deem it only necessary to say that the Kentucky statute does not, in our judgment, contravene the provisions of the Federal Constitution, or of any statute passed in pursuance thereof. Its enforcement causes no necessary conflict with national authority, and interferes with no right secured by Federal legislation, to the patentee or his assigns.

We perceive no error in the judgment, and it is

Affirmed.

MR. JUSTICE HUNT did not sit in this case, nor take any part in deciding it.

COLEMAN v. TENNESSEE.

1. The thirtieth section of the act of March 3, 1863 (12 Stat. 731), entitled "An Act for enrolling and calling out the national forces, and for other purposes," did not make the jurisdiction of the military tribunals over the offences therein designated, when committed by persons in the military service of the United States, and subject to the articles of war, exclusive of that of such courts of the loyal States as were open and in the undisturbed exercise of their jurisdiction.
2. When the territory of the States, which were banded together in hostility to the national government, and making war against it, was in the military occupation of the United States, the tribunals mentioned in said section had, under the authority conferred thereby, and under the laws of war, exclusive jurisdiction to try and punish offences of every grade committed there by persons in the military service.
3. Officers and soldiers of the army of the United States were not subject to the laws of the enemy, nor amenable to his tribunals for offences com-

mitted by them during the war. They were answerable only to their own government, and only by its laws, as enforced by its armies, could they be punished.

4. Unless suspended or superseded by the commander of the forces of the United States which occupied Tennessee, the laws of that State, so far as they affected its inhabitants among themselves, remained in force during the war, and over them its tribunals, unless superseded by him, continued to exercise their ordinary jurisdiction.

5. A., charged with having committed murder in Tennessee, whilst he was there in the military service of the United States during the rebellion, was, by a court-martial, then and there convicted, and sentenced to suffer death. The sentence, for some cause unknown, was not carried into effect. After the constitutional relations of that State to the Union were restored, he was, in one of her courts, indicted for the same murder. To the indictment he pleaded his conviction before the court-martial. The plea being overruled, he was tried, convicted, and sentenced to death. *Held*, 1. That the State court had no jurisdiction to try him for the offence, as he, at the time of committing it, was not amenable to the laws of Tennessee. 2. That his plea, although not proper, inasmuch as it admitted the jurisdiction of that court to try and punish him for the offence, if it were not for such former conviction, would not prevent this court from giving effect to the objection taken in this irregular way to such jurisdiction. Accordingly, this court reverses the judgment, and directs the discharge of A. from custody under the indictment.

ERROR to the Supreme Court of the State of Tennessee.

The facts are stated in the opinion of the court.

Mr. Henry S. Foote and *Mr. Leonidas C. Houk* for the plaintiff in error.

Mr. J. B. Heiskell, contra.

MR. JUSTICE FIELD delivered the opinion of the court.

This case comes before us from the Supreme Court of Tennessee. The plaintiff in error, the defendant in the court below, was indicted in the Criminal Court for the District of Knox County in that State, on the 2d of October, 1874, for the murder of one Mourning Ann Bell, alleged to have been committed in that county on the 7th of March, 1865. To this indictment he pleaded not guilty, and a former conviction for the same offence by a general court-martial regularly convened for his trial at Knoxville, Tenn., on the 27th of March, 1865, the United States at that time, and when the offence was committed, occupying with their armies East Tennessee as a military district, and the defendant being a regular soldier in their

military service, subject to the articles of war, military orders, and such military laws as were there in force by their authority. The plea states that before the said court-martial thus convened at Knoxville, then the head-quarters of the military district, the defendant was arraigned upon a charge of murder, in having killed the same person mentioned in the indictment, and that he was afterwards, on the 9th of May, 1865, tried and convicted of the offence by that tribunal, and sentenced to death by hanging, and that said sentence is still standing as the judgment of the court-martial, approved as required by law in such cases, without any other or further action thereon. In consideration of the premises, and by reason of the said trial and conviction, and of the jeopardy involved in said proceedings, the defendant prays that the indictment may be quashed.

Objection being taken by demurrer to this plea, it was twice amended by leave of the court. The first amendment consisted in setting forth with particularity the organization of the court-martial, and the proceedings before it upon which the defendant was convicted of the offence with which he is charged in the indictment. The second amendment consisted in adding an averment that the offence charged was committed, and that the court-martial which tried the defendant was held in time of civil war, insurrection, and rebellion.

To the plea thus amended a demurrer was sustained, on two grounds; one of which was, in substance, that the defendant's conviction of the offence charged by a court-martial, under the laws of the United States, on the 9th of May, 1865, was not a bar to the indictment for the same offence; because by the murder alleged he was also guilty of an offence against the laws of Tennessee.

The defendant was thereupon put upon his trial in the Criminal Court, convicted of murder, and sentenced to death. On appeal to the Supreme Court of the State the judgment was affirmed.

Pending the appeal to that court, the defendant was brought before the Circuit Court of the United States for the Eastern District of Tennessee on *habeas corpus*, upon a petition stating that he was unlawfully restrained of his liberty and imprisoned

by the sheriff of Knox County, upon the charge of murder, for which he had been indicted, tried, and convicted, as already mentioned; and setting forth his previous conviction for the same offence by a court-martial, organized under the laws of the United States, substantially as in the plea to the indictment. The sheriff made a return to the writ, that he held the defendant upon a *capias* from the criminal court for the offence of murder, and also upon an indictment for assisting a prisoner in making his escape from jail. The Circuit Court being of opinion that so far as the defendant was held under the charge of murder, he was held in contravention of the Constitution and laws of the United States, ordered his release from custody upon that charge. His counsel soon afterwards presented a copy of this order to the Supreme Court of Tennessee, and moved that he be discharged. That court took the motion under advisement, and disposed of it together with the appeal from the Criminal Court, holding, in a carefully prepared opinion, that the act of Congress of Feb. 5, 1867, under which the writ of *habeas corpus* was issued, did not confer upon the Federal Court, or upon any of its judges, authority to interfere with the State courts in the exercise of their jurisdiction over offences against the laws of the State, especially when, as in this case, the question raised by the pleadings was one which would enable the accused to have a revision of their action by the Supreme Court of the United States; and, therefore, that the order of the Circuit Court in directing the discharge of the defendant was a nullity. And upon the question of the effect of the conviction by the court-martial, it held that the conviction constituted no bar to the indictment in the State court for the same offence, on the ground that the crime of murder, committed by the defendant whilst a soldier in the military service, was not less an offence against the laws of the State, and punishable by its tribunals, because it was punishable by a court-martial under the laws of the United States.

The case being brought to this court, it has been argued as though its determination depended upon the construction given to the thirtieth section of the act of Congress of March 3, 1863, to enroll and call out the national forces, the defendant's coun-

sel contending that the section vested in general courts-martial and military commissions the right to punish for the offences designated therein, when committed in time of war, by persons in the military service of the United States, and subject to the articles of war, to the exclusion of jurisdiction over them by the State courts. That section enacts: —

"That in time of war, insurrection, or rebellion, murder, assault and battery with an intent to kill, manslaughter, mayhem, wounding by shooting or stabbing with an intent to commit murder, robbery, arson, burglary, rape, assault and battery with an intent to commit rape, and larceny, shall be punishable by the sentence of a general court-martial or military commission, when committed by persons who are in the military service of the United States, and subject to the articles of war; and the punishment for such offences shall never be less than those inflicted by the laws of the State, territory, or district in which they may have been committed." 12 Stat. 736.

The section is part of an act containing numerous provisions for the enrolment of the national forces, designating who shall constitute such forces; who shall be exempt from military service; when they shall be drafted for service; when substitutes may be allowed; how deserters and spies and persons resisting the draft shall be punished; and many other particulars, having for their object to secure a large force to carry on the then existing war, and to give efficiency to it when called into service. It was enacted not merely to insure order and discipline among the men composing those forces, but to protect citizens not in the military service from the violence of soldiers. It is a matter well known that the march even of an army not hostile is often accompanied with acts of violence and pillage by straggling parties of soldiers, which the most rigid discipline is hardly able to prevent. The offences mentioned are those of most common occurrence, and the swift and summary justice of a military court was deemed necessary to restrain their commission.

But the section does not make the jurisdiction of the military tribunals exclusive of that of the State courts. It does not declare that soldiers committing the offences named shall not be amenable to punishment by the State courts. It simply

declares that the offences shall be "punishable," not that they shall be punished by the military courts; and this is merely saying that they may be thus punished.

Previous to its enactment, the offences designated were punishable by the State courts, and persons in the military service who committed them were delivered over to those courts for trial; and it contains no words indicating an intention on the part of Congress to take from them the jurisdiction in this respect which they had always exercised. With the known hostility of the American people to any interference by the military with the regular administration of justice in the civil courts, no such intention should be ascribed to Congress in the absence of clear and direct language to that effect.

We do not mean to intimate that it was not within the competency of Congress to confer exclusive jurisdiction upon military courts over offences committed by persons in the military service of the United States. As Congress is expressly authorized by the Constitution "to raise and support armies," and "to make rules for the government and regulation of the land and naval forces," its control over the whole subject of the formation, organization, and government of the national armies, including therein the punishment of offences committed by persons in the military service, would seem to be plenary. All we now affirm is, that by the law to which we are referred, the thirtieth section of the Enrolment Act, no such exclusive jurisdiction is vested in the military tribunals mentioned. No public policy would have been subserved by investing them with such jurisdiction, and many reasons may be suggested against it. Persons in the military service could not have been taken from the army by process of the State courts without the consent of the military authorities; and therefore no impairment of its efficiency could arise from the retention of jurisdiction by the State courts to try the offences. The answer of the military authorities to any such process would have been, "We are empowered to try and punish the persons who have committed the offences alleged, and we will see that justice is done in the premises." Interference with the army would thus have been impossible; and offences committed by soldiers, discovered after the army

had marched to a distance, when the production of evidence before a court-martial would have been difficult, if not impossible, or discovered after the war was over and the army disbanded, would not go unpunished. Surely Congress could not have intended that in such cases the guilty should go free.

In denying to the military tribunals exclusive jurisdiction, under the section in question, over the offences mentioned, when committed by persons in the military service of the United States and subject to the articles of war, we have reference to them when they were held in States occupying, as members of the Union, their normal and constitutional relations to the Federal government, in which the supremacy of that government was recognized, and the civil courts were open and in the undisturbed exercise of their jurisdiction. When the armies of the United States were in the territory of insurgent States, banded together in hostility to the national government and making war against it, in other words, when the armies of the United States were in the enemy's country, the military tribunals mentioned had, under the laws of war, and the authority conferred by the section named, exclusive jurisdiction to try and punish offences of every grade committed by persons in the military service. Officers and soldiers of the armies of the Union were not subject during the war to the laws of the enemy, or amenable to his tribunals for offences committed by them. They were answerable only to their own government, and only by its laws, as enforced by its armies, could they be punished.

It is well settled that a foreign army permitted to march through a friendly country, or to be stationed in it, by permission of its government or sovereign, is exempt from the civil and criminal jurisdiction of the place. The sovereign is understood, said this court in the celebrated case of *The Exchange* (7 Cranch, 139), to cede a portion of his territorial jurisdiction when he allows the troops of a foreign prince to pass through his dominions: "In such case, without any express declaration waiving jurisdiction over the army to which this right of passage has been granted, the sovereign who should attempt to exercise it would certainly be con-

sidered as violating his faith. By exercising it, the purpose for which the free passage was granted would be defeated, and a portion of the military force of a foreign independent nation would be diverted from those national objects and duties to which it was applicable, and would be withdrawn from the control of the sovereign whose power and whose safety might greatly depend on retaining the exclusive command and disposition of this force. The grant of a free passage, therefore, implies a waiver of all jurisdiction over the troops during their passage, and permits the foreign general to use that discipline and to inflict those punishments which the government of his army may require." [1]

If an army marching through a friendly country would thus be exempt from its civil and criminal jurisdiction, *a fortiori* would an army invading an enemy's country be exempt. The fact that war is waged between two countries negatives the possibility of jurisdiction being exercised by the tribunals of the one country over persons engaged in the military service of the other for offences committed while in such service. Aside from this want of jurisdiction, there would be something incongruous and absurd in permitting an officer or soldier of an invading army to be tried by his enemy, whose country he had invaded.

The fact that when the offence was committed, for which the defendant was indicted, the State of Tennessee was in the military occupation of the United States, with a military gov-

[1] The same exemption from the civil and criminal jurisdiction of the place is extended to an armed vessel of war entering the ports of a friendly country by permission of its government, or seeking an asylum therein in distress. She is accorded the rights of exterritoriality, and is treated as if constituting a part of the territory of her sovereign. "She constitutes," said the court in the same case, "a part of the military force of her nation, acts under the immediate and direct command of the sovereign, is employed by him in national objects. He has many and powerful motives for preventing those objects from being defeated by the interference of a foreign State. Such interference cannot take place without affecting his power and his dignity. The implied license, therefore, under which such vessel enters a friendly port, may reasonably be construed, and it seems to the court ought to be construed, as containing an exemption from the jurisdiction of the sovereign within whose territory she claims the rights of hospitality." 7 Cranch, 144. See also Cushing on Belligerent Asylum, in Opinions of Att'ys-Gen., vol. vii. p. 122; Halleck, Int. Law c. 7, sect. 25.

ernor at its head, appointed by the President, cannot alter this conclusion. Tennessee was one of the insurgent States, forming the organization known as the Confederate States, against which the war was waged. Her territory was enemy's country, and its character in this respect was not changed until long afterwards.

The doctrine of international law on the effect of military occupation of enemy's territory upon its former laws is well established. Though the late war was not between independent nations, but between different portions of the same nation, yet having taken the proportions of a territorial war, the insurgents having become formidable enough to be recognized as belligerents, the same doctrine must be held to apply. The right to govern the territory of the enemy during its military occupation is one of the incidents of war, being a consequence of its acquisition; and the character and form of the government to be established depend entirely upon the laws of the conquering State or the orders of its military commander. By such occupation the political relations between the people of the hostile country and their former government or sovereign are for the time severed; but the municipal laws — that is, the laws which regulate private rights, enforce contracts, punish crime, and regulate the transfer of property — remain in full force, so far as they affect the inhabitants of the country among themselves, unless suspended or superseded by the conqueror. And the tribunals by which the laws are enforced continue as before, unless thus changed. In other words, the municipal laws of the State, and their administration, remain in full force so far as the inhabitants of the country are concerned, unless changed by the occupying belligerent. Halleck, Int. Law, c. 88.

This doctrine does not affect, in any respect, the exclusive character of the jurisdiction of the military tribunals over the officers and soldiers of the army of the United States in Tennessee during the war; for, as already said, they were not subject to the laws nor amenable to the tribunals of the hostile country. The laws of the State for the punishment of crime were continued in force only for the protection and benefit of its own people. As respects them, the same acts which constituted

offences before the military occupation constituted offences afterwards; and the same tribunals, unless superseded by order of the military commanders, continued to exercise their ordinary jurisdiction.

If these views be correct, the plea of the defendant of a former conviction for the same offence by a court-martial under the laws of the United States was not a proper plea in the case. Such a plea admits the jurisdiction of the criminal court to try the offence, if it were not for the former conviction. Its inapplicability, however, will not prevent our giving effect to the objection which the defendant, in this irregular way, attempted to raise, that the State court had no jurisdiction to try and punish him for the offence alleged. The judgment and conviction in the criminal court should have been set aside, and the indictment quashed for want of jurisdiction. Their effect was to defeat an act done, under the authority of the United States, by a tribunal of officers appointed under the law enacted for the government and regulation of the army in time of war, and whilst that army was in a hostile and conquered State. The judgment of that tribunal at the time it was rendered, as well as the person of the defendant, were beyond the control of the State of Tennessee. The authority of the United States was then sovereign and their jurisdiction exclusive. Nothing which has since occurred has diminished that authority or impaired the efficacy of that judgment.

In thus holding, we do not call in question the correctness of the general doctrine asserted by the Supreme Court of Tennessee, that the same act may, in some instances, be an offence against two governments, and that the transgressor may be held liable to punishment by both when the punishment is of such a character that it can be twice inflicted, or by either of the two governments if the punishment, from its nature, can be only once suffered. It may well be that the satisfaction which the transgressor makes for the violated law of the United States is no atonement for the violated law of Tennessee. But here there is no case presented for the application of the doctrine. The laws of Tennessee with regard to offences and their punishment, which were allowed to remain in force during its

military occupation, did not apply to the defendant, as he was at the time a soldier in the army of the United States and subject to the articles of war. He was responsible for his conduct to the laws of his own government only as enforced by the commander of its army in that State, without whose consent he could not even go beyond its lines. Had he been caught by the forces of the enemy, after committing the offence, he might have been subjected to a summary trial and punishment by order of their commander; and there would have been no just ground of complaint, for the marauder and the assassin are not protected by any usages of civilized warfare. But the courts of the State, whose regular government was superseded, and whose laws were tolerated from motives of convenience, were without jurisdiction to deal with him.

This conclusion renders it unnecessary to consider the question presented as to the effect to be given to the order of the Circuit Court of the United States directing the discharge of the defendant. It is sufficient to observe that, by the act of Congress of Feb. 5, 1867, the several courts of the United States, and their judges, in their respective jurisdictions, have, in addition to the authority previously conferred, power to grant writs of *habeas corpus* in all cases upon petition of any person restrained of his liberty in violation of the Constitution or of any law of the United States; and if it appear, on the hearing had upon the return of the writ, that the petitioner is thus restrained, he must be forthwith discharged and set at liberty. *Ex parte Yerger*, 8 Wall. 101.

It follows, from the views expressed, that the judgment of the Supreme Court of Tennessee must be reversed, and the cause remanded with directions to discharge the defendant from custody by the sheriff of Knox County on the indictment and conviction for murder in the State court. But as the defendant was guilty of murder, as clearly appears not only by the evidence in the record in this case, but in the record of the proceedings of the court-martial, — a murder committed, too, under circumstances of great atrocity, — and as he was convicted of the crime by that court and sentenced to death, and it appears by his plea that said judgment was duly approved and still remains without any action having been taken upon

offences before the military occupation constituted offences afterwards; and the same tribunals, unless superseded by order of the military commanders, continued to exercise their ordinary jurisdiction.

If these views be correct, the plea of the defendant of a former conviction for the same offence by a court-martial under the laws of the United States was not a proper plea in the case. Such a plea admits the jurisdiction of the criminal court to try the offence, if it were not for the former conviction. Its inapplicability, however, will not prevent our giving effect to the objection which the defendant, in this irregular way, attempted to raise, that the State court had no jurisdiction to try and punish him for the offence alleged. The judgment and conviction in the criminal court should have been set aside, and the indictment quashed for want of jurisdiction. Their effect was to defeat an act done, under the authority of the United States, by a tribunal of officers appointed under the law enacted for the government and regulation of the army in time of war, and whilst that army was in a hostile and conquered State. The judgment of that tribunal at the time it was rendered, as well as the person of the defendant, were beyond the control of the State of Tennessee. The authority of the United States was then sovereign and their jurisdiction exclusive. Nothing which has since occurred has diminished that authority or impaired the efficacy of that judgment.

In thus holding, we do not call in question the correctness of the general doctrine asserted by the Supreme Court of Tennessee, that the same act may, in some instances, be an offence against two governments, and that the transgressor may be held liable to punishment by both when the punishment is of such a character that it can be twice inflicted, or by either of the two governments if the punishment, from its nature, can be only once suffered. It may well be that the satisfaction which the transgressor makes for the violated law of the United States is no atonement for the violated law of Tennessee. But here there is no case presented for the application of the doctrine. The laws of Tennessee with regard to offences and their punishment, which were allowed to remain in force during its

military occupation, did not apply to the defendant, as he was at the time a soldier in the army of the United States and subject to the articles of war. He was responsible for his conduct to the laws of his own government only as enforced by the commander of its army in that State, without whose consent he could not even go beyond its lines. Had he been caught by the forces of the enemy, after committing the offence, he might have been subjected to a summary trial and punishment by order of their commander; and there would have been no just ground of complaint, for the marauder and the assassin are not protected by any usages of civilized warfare. But the courts of the State, whose regular government was superseded, and whose laws were tolerated from motives of convenience, were without jurisdiction to deal with him.

This conclusion renders it unnecessary to consider the question presented as to the effect to be given to the order of the Circuit Court of the United States directing the discharge of the defendant. It is sufficient to observe that, by the act of Congress of Feb. 5, 1867, the several courts of the United States, and their judges, in their respective jurisdictions, have, in addition to the authority previously conferred, power to grant writs of *habeas corpus* in all cases upon petition of any person restrained of his liberty in violation of the Constitution or of any law of the United States; and if it appear, on the hearing had upon the return of the writ, that the petitioner is thus restrained, he must be forthwith discharged and set at liberty. *Ex parte Yerger*, 8 Wall. 101.

It follows, from the views expressed, that the judgment of the Supreme Court of Tennessee must be reversed, and the cause remanded with directions to discharge the defendant from custody by the sheriff of Knox County on the indictment and conviction for murder in the State court. But as the defendant was guilty of murder, as clearly appears not only by the evidence in the record in this case, but in the record of the proceedings of the court-martial, — a murder committed, too, under circumstances of great atrocity, — and as he was convicted of the crime by that court and sentenced to death, and it appears by his plea that said judgment was duly approved and still remains without any action having been taken upon

it, he may be delivered up to the military authorities of the United States, to be dealt with as required by law.

So ordered.

MR. JUSTICE CLIFFORD dissenting.

State Constitutions, as well as the Constitution of the United States, provide, in substance and effect, that no person shall be subject to be twice put in jeopardy of life for the same offence. Wherever that constitutional prohibition is found, whether in a State or the Federal Constitution, it is doubtless intended as a safeguard to the citizen against the repetition of a criminal prosecution in all cases where the accused has been once regularly tried for the same offence, and legally convicted or acquitted, which means that a party shall not be tried a second time for the same offence, after he has once been convicted or acquitted of the same by the verdict of a jury, and judgment has been rendered in the case against him or in his favor. But it does not mean that he shall not be tried for the offence a second time, if the jury in the first trial were discharged without giving any verdict, or if, having given a verdict, the judgment was arrested or a new trial was granted at the request of the accused; for in such a case the life of the accused cannot judicially be said to have been put in jeopardy. 2 Story, Const. (3d ed.), sect. 1787; *United States* v. *Haskell*, 4 Wash. 410; *Same* v. *Perez*, 9 Wheat. 579.

Borrowed, as that provision was, from the common law, it has everywhere been held to be subject to the same exceptions, limitations, and qualifications as were annexed to it by the expounders of the great repository of criminal jurisprudence. *Vaux's Case*, 1 Coke, 100.

Jeopardy, in the constitutional sense, arises when the accused is put to trial before a court of competent jurisdiction upon a sufficient indictment, and the prisoner has been legally convicted or acquitted by the verdict of a jury, as appears by the record thereof remaining in the court where the verdict was returned. 1 Bishop, Cr. Proced. (2d ed.), sect. 808.

Authorities may be referred to where it is held that the prisoner is put in legal jeopardy when the jury is duly impanelled and charged with his deliverance; but there are so many excep-

tions to that theory, that it cannot be regarded as a rule of decision, unless the trial is terminated short of a verdict and judgment, by the fault of the prosecutor.

Even when the trial terminates before judgment without the fault of the accused, or where the form of the trial, verdict, and judgment are in all respects correct, there are exceptions to the rule that the accused shall not be twice put in jeopardy of life, as well established and as universally acknowledged as the rule itself, of which the following are examples: —

Legal jeopardy does not arise if the court had not jurisdiction of the offence. *Commonwealth* v. *Peters*, 12 Metc. (Mass.) 387; *Commonwealth* v. *Goddard*, 13 Mass. 455; *The People* v. *Tyler*, 7 Mich. 161.

Nor is such a party put in legal jeopardy if it appears that the first indictment was clearly insufficient and invalid. *Commonwealth* v. *Bakeman*, 105 Mass. 53; *Gerard* v. *The People*, 3 Ill. 362; *The People* v. *Cook*, 10 Mich. 164; *Mount* v. *Commonwealth*, 2 Duv. (Ky.) 93.

Nor if by any overruling necessity the jury are discharged without a verdict. *United States* v. *Perez*, 9 Wheat. 579; *The People* v. *Goodwin*, 18 Johns. (N. Y.) 187; *Commonwealth* v. *Bowden*, 9 Mass. 494; *Commonwealth* v. *Purchase*, 2 Pick. (Mass.) 521.

Nor is such a party put in legal jeopardy if the term of the court, as fixed by law, comes to an end before the trial is finished. *The State* v. *Brooks*, 3 Humph. (Tenn.) 70; *State* v. *Mahala*, 10 Yerg. (Tenn.) 532; *State* v. *Battle*, 7 Ala. 259; *In the Matter of Robert Spier*, 1 Dev. (N. C.) L. 491; *Wright* v. *State*, 5 Ind. 290; Cooley, Const. Lim. (4th ed.) 404.

Nor if the jury are discharged before verdict, with the consent of the accused, expressed or implied. *State* v. *Slack*, 6 Ala. 676.

Nor if the verdict is set aside on motion of the accused, or on writ of error sued out in his behalf. *The State of Iowa* v. *Redman*, 17 Iowa, 329.

Nor in case the judgment is arrested on his motion. *The People* v. *Casborus*, 13 Johns. (N. Y.) 351.

Sufficient appears to show that the prisoner, on the 2d of October, 1874, was in due form indicted of the crime of murder

in the proper criminal court of the county where the homicide was committed, the charge being that he, the prisoner, in that county, on the 7th of March, 1865, unlawfully, maliciously, wilfully, deliberately, premeditatedly, and of his malice aforethought, with a certain pistol which he then and there in his hand had and held, did shoot M. Ann Bell, then and there in the peace of God and the State being, from which shooting, in manner and form as alleged, the said M. Ann Bell then and there instantly died. Due process was issued and served; and the prisoner, upon his arraignment, pleaded that he was not guilty of the offence charged against him, and put himself upon the country.

Appended to that plea the prisoner also pleaded in bar of the indictment a former conviction for the same offence, in substance and effect as follows: That at the time he committed the alleged homicide he was an enlisted soldier in the Federal army, which was then and there in the occupation and control of the military district where the act of homicide was committed, and that he was then and there subject to the articles of war, and that by virtue thereof he was then and there, to wit, on the 24th of March, 1865, arraigned before a general court-martial upon charges and specifications setting forth the identical murder of the identical same person, which is the identical offence with which he is charged in the aforesaid indictment; that on the 9th of May following he was convicted of the crime of murder, and was sentenced by the court-martial to suffer the penalty of death by hanging; and he avers that the murder of which he was charged, and for which he was arraigned, tried, and convicted, is the same identical offence set forth in the pending indictment, and that the sentence is still standing as the judgment of said general court-martial, approved as required by law, without any other or further action thereon.

When the court met again, to wit, on the 6th of September in the same year, the district attorney of the county demurred to the plea in bar; and the court, after hearing the parties, sustained the demurrer, upon two grounds: first, because it did not convey a reasonable certainty of meaning; and, secondly, because it did not show a substantial cause of defence.

Leave being granted, the prisoner amended his special plea in bar of the indictment. By the amended plea he set forth the names of the officers comprising the general court-martial, the order under which it was convened, and the specification and charge under which he was arraigned, tried, and convicted. Averments are also set forth in the amended plea that the offence charged in the specification before the general court-martial is the same as that embodied in the indictment, and that the court-martial adjudged the prisoner guilty of the offence charged, and sentenced him to be punished as in such case made and provided; to which is added, that the proceedings were forwarded to the commander of the department, and that he, the said commander, approved and confirmed the sentence, and ordered that the same should be carried into execution.

Pursuant to the leave granted, the amendment to the plea was duly filed in the case; and the district attorney demurred to it, and assigned the following causes for the demurrer: 1. Because neither the plea nor the amendment alleges that the judgment of the court-martial is still in force and effect. 2. Because it is not alleged in either that the prisoner at the time of trial was subject to the articles of war. 3. Because neither the plea nor the amendment thereto alleges that it was during or in time of war, insurrection, or rebellion, when the offence was committed with which the prisoner is charged. 4. Because the conviction by the court-martial, even if regular in form, is no bar to the pending indictment for the alleged offence committed against the laws of the State.

Hearing was had, and the court where the indictment was found sustained the demurrer for the first and fourth causes shown by the pleader. Preliminary questions of the kind having been determined adversely to the prisoner, the jury was duly impanelled for his trial; and they returned a verdict that he was guilty of murder in the first degree as charged in the indictment, without mitigating circumstances. Murder in the first degree is a capital offence in that State, and the court, on the first day of October following, sentenced the prisoner to be punished as required by law.

Exceptions were filed by the prisoner, and he appealed from

the judgment of the subordinate court to the Supreme Court of the State. Pending the appeal, to wit, on the 17th of March, 1876, he filed a petition for a writ of *habeas corpus* in the Circuit Court of the United States, alleging that he was unlawfully restrained of his liberty by the sheriff of the county. Service was made; and the sheriff returned that he held the prisoner by virtue of a *capias* from the county criminal court for the offence of murder, and under an indictment for an escape from the county jail. Due return having been made, the court adjudged that the prisoner, so far as he was held under the charge of murder, should be released from custody and be permitted to go thence without hindrance or molestation; but he continued to remain in prison under the other charge.

Enough appears to show that the Supreme Court of the State, inasmuch as the order of discharge had respect to a prisoner in custody under State process, was of the opinion that it was a mere nullity, and that the same court proceeded to determine the legal questions involved in the appeal.

No question under the petition for *habeas corpus* is presented in the pleadings, nor was any such question ruled or decided by the court of original jurisdiction. Two questions presented by the special demurrer were decided by the judge at the trial adversely to the prisoner, both of which were properly before the Supreme Court on appeal, and were, in effect, decided in the same way: 1. That the plea in bar was defective because it did not allege that the judgment of the court-martial was still in force and operative. 2. Because the conviction by the court-martial, even if the plea is regular in form, is not a bar to the pending indictment.

Three points were decided by the State Supreme Court: 1. That the order of discharge made by the Circuit Court was a nullity. 2. That the plea in bar, even if sufficient in form, was no bar of the indictment found in the State court. 3. That the plea in bar was defective for the two reasons assigned by the subordinate court; and for these reasons the Supreme Court affirmed the judgment of the local court, and ordered that the sentence there pronounced be carried into execution.

Immediate application was made by the prisoner for a writ of error to remove the cause into this court, which was granted,

and an order entered there staying further proceedings in that court during the pendency of the writ of error.

Questions of difficulty arise in the case, of which the following are the most important: —

1. Conceding that the record of a former conviction is a good defence to a second indictment for the same offence, is that defence well pleaded in the case before the court?

2. Suppose the sentence of a court-martial is such a judgment as will support such defence, when the second indictment is for the same offence and for a violation of the laws of the same sovereignty, will the record of a sentence by a court-martial of the United States support the plea of a former conviction, where the second indictment is found for an offence committed in violation of a State law?

3. Even if a Circuit Court may grant the writ of *habeas corpus* to a prisoner in custody under State process, is the order discharging the prisoner from such custody a bar to the further prosecution of the indictment under which he was held prior to such order of discharge?

Argument to show that the defence of a former conviction must be pleaded is quite unnecessary, as the rule at the present day is universally acknowledged; nor is it necessary to enter into much discussion to prove that it will not avail as a defence unless it is well pleaded, as that follows from the antecedent proposition, the rule being that the evidence is not admissible under the general issue. *The People* v. *Benjamin*, 2 Park. (N. Y.) Cr. 201; 1 Bennett, Lead. Cr. Cas. (2d ed.) 541.

Second convictions, or even second trials, after legal conviction or acquittal, are not allowed in the administration of criminal justice; and the test by which to decide whether the accused has been once legally convicted or acquitted, says Spencer, C. J., is familiar to every lawyer, and he proceeds to say that it can only be by plea of *autrefois convict* or *autrefois acquit*, both of which are grounded upon the universal maxim of the common law, that no man is to be brought into jeopardy of his life more than once for the same offence, from which it follows as a consequence that if the accused has been once fairly convicted or found not guilty by the verdict of a jury, he may plead such conviction or acquittal in bar of any subse-

quent accusation for the same offence; but the defence must be pleaded, and it must be alleged and proved by the former record that the conviction or acquittal was legal, and that it was based on the verdict of a jury duly impanelled and sworn, else the plea will be subject to demurrer. *The People* v. *Goodwin*, 18 Johns. (N. Y.) 187; *The People* v. *McKay*, id. 212; *The People* v. *Olcott*, 2 Johns. (N. Y.) Cas. 801.

Jurisdiction is essential to the validity of every conviction or acquittal, as the rule is universal that a former conviction or acquittal in a court having no jurisdiction of the offence is a mere nullity, and constitutes no bar to a second prosecution. *Rex* v. *Bowman*, 6 Car. & P. 101; *State* v. *Elden*, 41 Me. 165; *Commonwealth* v. *Roby*, 12 Pick. (Mass.) 496.

Pleas of the kind must allege that the former trial was in a court having jurisdiction of the case, and that the person and the offence are the same, and must set forth the former record, else the plea will be bad. *King* v. *Wildey*, 1 Man. & Sel. 188; 1 Burn, Justice (30th ed.), 352; 2 Russell (4th ed.), 60; *Rex* v. *Edwards*, Russ. & R. 224.

Standard authorities which show that the plea of a former conviction or acquittal must set forth the substance of the record are very numerous and decisive. Where the plea is *autrefois convict*, it must appear that the prisoner received sentence as required by law; or if the plea be *autrefois acquit*, it must appear that the court gave the order that he go without day. Roscoe, Cr. Evid. (8th ed.) 199.

Defences of the kind are often set up; and in order to avoid false pretences, the established rule is, that the accused is required not only to show the nature of the former prosecution and the conviction or acquittal with certainty in his plea, but also to show the record or its substance to the court, by producing or vouching it at the time he pleads, for otherwise it would be in his power to delay the trial when he pleased by pleading a former conviction or acquittal in another jurisdiction; and in order to prevent such false pretences in pleading, the requirement is, that the plea shall show the record, or vouch it if it be in the same court in the first instance, and that he is not allowed to wait until *nul tiel record* is pleaded by the prosecutor. 2 Stark. Cr. Pl. 350.

Support to that proposition is found in the form of such pleas as given in all the standard works of criminal law. Such a form of pleading is given by Bishop in his valuable work upon Criminal Procedure. His directions are that the pleader shall set forth the former conviction and judgment verbatim, and then proceed as follows: "As by the record thereof in the said court remaining more fully and at large appears, which said judgment and conviction still remain in full force and effect, and not in the least reversed or made void." 1 Bishop, Cr. Proced. (2d ed.), sect. 808.

Exactly the same form of such a plea is given by Train & Heard in their work entitled "Precedents of Indictments;" and their directions to the pleader are the same, that is, that the pleader shall set forth the former judgment and conviction verbatim, and then proceed to allege as directed in the other treatise, "as by the record thereof in the said court remaining more fully and at large appears, which said judgment and conviction still remain in full force and effect, and not in the least reversed or made void." Train & Heard, Prec. Indict. 486.

Forms for pleas in bar in such cases are also given by Mr. Archbold in his standard work upon Pleading in Criminal Cases. Like the forms previously noticed, he also directs that the substance of the proceedings in the former suit be fully set forth, and that the pleader proceed to add, "as by the record of the said conviction more fully and at large appears, which said judgment and conviction still remain in full force and effect, and not in the least reversed or made void." Archb. Plead. in Cr. Cas. (18th ed.) 141.

Averments of a like character are required by the form of such a plea given by Mr. Wharton in his work entitled "Precedents of Indictments." He gives the substance of the proceedings in the suit which led to the former conviction, and adds, "as by the record thereof more fully and at large appears, which said judgment still remains in full force and effect, and not in the least reversed or made void." 2 Whart. Prec. Indict. & Pleas (8d ed.), sect. 1154.

Courts and lawyers in Massachusetts, having occasion to study the forms of pleading in criminal cases, were for more

than a quarter of a century accustomed to consult the precedents, furnished by a learned and experienced prosecuting officer of that Commonwealth. Concise as the form is as given in that volume, it is nevertheless believed to contain all the necessary elements of a good plea. Suffice it to say that the author directs the pleader to recite the record of the former judgment and conviction verbatim, and then proceed as follows, to wit: as by the record thereof more fully and at large appears, which said judgment still remains in full force and effect. Davis, Precedents, 278.

Treatises of a standard character everywhere contain such a requirement, of which the very latest is that by Mr. F. F. Heard, whose extensive and accurate learning upon the subject of pleading in criminal cases entitles his opinion to great weight. His directions to the pleader are as follows: Set forth the former judgment and conviction verbatim, and proceed to aver, as by the record thereof in the said court more fully and at large appears, which said judgment and conviction still remain in full force and effect, and not in the least reversed or made void. Mass. Cr. Law, 837.

Confirmed as that writer is by Starkie and Archbold, and by Lord Ellenborough in *King* v. *Wildey* (1 Mau. & Sel. 188), his view ought to be regarded as conclusive; and the same author states that the defence of a former conviction or a former acquittal must be pleaded, and that it is not admissible under the general issue, which is decisive of the whole case. p. 172.

Matters of a special character suggested in defence of a criminal prosecution which are not well pleaded, if duly demurred to, are to be treated as if they had no existence; and if that be so, and it be well settled law that the defence of *autrefois convict* is not admissible in evidence under the general issue, then it follows that the whole foundation of the judgment of the court in this case is swept away. Since the time of Lord Coke, it has been settled law that such a plea is bad, unless it contains the averment that the prior judgment is in full force and unreversed, and the transcript shows that the prosecutor demurred to the plea on account of that defect, and that the State court sustained the demurrer and adjudged

the plea bad. Nor can any authority be found to support the proposition that such a defence is admissible under the general issue, and if not, then it follows to a demonstration that the judgment of the State court is correct.

Convictions and judgments may be reversed in criminal as well as in civil cases; and it is settled law that a second trial, where the former conviction or judgment is reversed, is not a violation of the constitutional provision which declares that no person shall be subject to be twice put in jeopardy for the same offence. *The People* v. *Rulloff*, 5 Park. (N. Y.) Cr. 82; 1 Colby, Cr. Law, 280; *Cobia* v. *The State*, 16 Ala. 781; 2 Story, Const. (8d ed.) 1787.

Exceptions of the kind and many others existing to the rule that a former conviction for the same offence is a bar to a pending indictment, show the necessity that the plea should set forth the substance of the proceedings in the former suit, and contain sufficient averments to show that the judgment is unreversed and in full force and effect. Where the judgment in the former suit was in another jurisdiction, the form given for the plea of *autrefois convict*, as given in all the standard writers on the subject, contains the formal averment that the judgment is unreversed and in full force.

Less strictness is required in pleading *autrefois acquit*, and in cases where the former trial and sentence were in the same court where the second indictment is pending. Text-writers in some cases seem to require the same averment as when the plea of a former conviction is based upon the record existing in another jurisdiction, but the better opinion is that the plea setting up a former conviction or acquittal in the same court is good if the pleader makes a *profert* of the record, as follows: as appears by the record of the proceedings now here remaining in court. *Rex* v. *Sheen*, 2 Car. & P. 634.

Even in these cases the pleader must make *profert* of the record of the former conviction, or the plea will be bad, as appears by each one of the following authorities: *Regina* v. *Bird*, T. & M. 445, note. In that case, the form of the plea is given in the note, and the words of the averment are, "as by the record of the said proceedings now here appears." *Same* v. *Same*, 5 Cox C. C. 14; *Same* v. *Same*, 2 Eng. L. & Eq. 448.

Substantial conformity with the requirement that the former record shall be set forth or *profert* made of it, will be sufficient to support the plea of *autrefois acquit*, if the offence charged in the pending indictment is the same as that embodied in the record of the former acquittal, as the only judgment in case of acquittal is that the prisoner be discharged and go without day. *The King* v. *Emden*, 9 East, 438.

Confirmation of that proposition is found in several cases; but it is equally well settled, that if the plea does not state the substance of the former proceedings, and does not make *profert* of the former record, the plea is bad, and will be held insufficient on demurrer. *The King* v. *Vandercomb*, 2 Leach, 714.

There can be no plea of *autrefois acquit*, says Jervis, C. J., where there is no judgment in the former trial on record. *Regina* v. *Reid*, *Ackroyd*, *& Rothwell*, 1 Eng. L. & Eq. 595.

Speaking of the plea of *autrefois convict*, Chitty says, it is of a mixed nature, and consists partly of matter of record and partly of matter of fact, and he adds, with emphasis, that it is settled to be absolutely requisite to set forth in the plea the record of the former acquittal; and, if so, it is equally requisite that it should be averred that the judgment is unreversed and in full force, as every lawyer of experience in criminal law knows, that, if the verdict was set aside or the judgment arrested at the request of the person convicted, the conviction becomes a nullity. 1 Chitty, Cr. L. 463; *Regina* v. *Drury*, 3 Car. & Kir. 193; *Waller* v. *The State*, 40 Ala. 325.

For these reasons, I am of opinion that the plea in bar to the indictment filed by the prisoner was bad, and that the decision of the State court sustaining the demurrer to it was correct. Having come to that conclusion, it is not necessary to examine the other objection to the plea in bar.

Suppose, for the sake of argument, that the plea in bar in this case is sufficient in form, still the question arises, whether the sentence of a court-martial of the United States is such a judgment as will sustain the plea of *autrefois convict* in a case where the pending indictment is found by the grand jury of a State for an offence defined by the laws of a State.

When the Federal Constitution was adopted, many of the rights of sovereignty previously possessed by the States were

ceded to the United States; and all agree that in the exercise of these powers the Federal government is supreme in its sphere of action, but the power to establish the ordinary regulations of police was still left with the individual States, and Mr. Cooley says that it cannot be taken from the States, nor can it be exercised under legislation by Congress. Neither can the national government, through any of its departments or officers, assume any supervision of the police regulations of the States. Cooley, Const. Lim. (4th ed.) 715; *United States* v. *Dewit*, 9 Wall. 44.

It has been frequently decided by this court, says Mr. Justice Grier, that the powers which relate merely to municipal regulations, or what may properly be called internal police, are not surrendered by the States or restrained by the Constitution of the United States, and that consequently, in relation to these, the authority of a State is complete, unqualified, and conclusive; and he decided that every law for the restraint and punishment of crime, for the preservation of the public peace, health, and morals, must come within that category. *License Cases*, 5 How. 504.

All that the Federal authority can do in such a case is to see that the States do not, under cover of this power, invade the sphere of Federal sovereignty, and obstruct or impede the exercise of any authority which the Constitution has confided to the United States, or deprive any citizen of rights guaranteed by the Constitution. State powers of the kind extend to every rightful subject of legislation connected with their internal affairs, not prohibited by the Federal Constitution, which is necessary to protect the life and health of the citizen and to promote the peace, prosperity, and good order of society, and give efficacy to the maxim that each shall use what is his own, in such a manner as not to injure that of another. *Thorp* v. *The Rutland & Burlington Railroad Co.*, 27 Vt. 140; Potter's Dwarris, 454.

By the law of the State, murder is defined as follows: If any person of sound memory and discretion unlawfully kill any reasonable creature in being and under the peace of the State, with malice aforethought, either express or implied, such person shall be guilty of murder. 8 State Stat. 43.

Beyond question, the prisoner, on the 2d of October, 1874, was duly indicted of the crime of murder by the grand jury of the county, as appears by the indictment set forth in the record. Judicial authorities are not necessary to show that no Federal court created by Congress had jurisdiction of the offence, as the homicide was committed on land within the State, and not within any place over which the United States had exclusive jurisdiction. Exclusive jurisdiction of the offence, therefore, was vested in the State court, unless it can be held that the unexecuted sentence of the court-martial superseded the State law defining the crime of murder, and deprived the State court of the power to hear, try, and sentence the prisoner if found guilty, as that law required.

Congress has never defined such an offence, when committed within the acknowledged jurisdiction of the State, under the circumstances disclosed in the record, nor is there any pretence for the suggestion, that there is any conflict between the authorities of the State and the judicial authorities of the United States. Sentence without punishment is all that is pretended in this case; and the prisoner, through his counsel, admits that the failure of the United States to carry the sentence into effect must be taken as an abandonment by the United States to execute the plaintiff for the offence of which he was convicted by the court-martial.

Appeal from the sentence of the judge who presided at the trial to the State Supreme Court appears to have been taken chiefly, if not entirely, for the purpose of reviewing the ruling of the judge that the plea in bar filed by the prisoner was bad. Evidence to show that any other ruling of the judge was seriously controverted in the appellate tribunal is not found in the transcript, nor has any such attempt been made in argument here by the counsel of the prisoner. Instead of that, the main stress of the argument has been to show that the order of the Circuit Court discharging the prisoner under the petition for *habeas corpus* is final and conclusive, and to show that no person can lawfully be twice put in jeopardy of life, without much regard to the question whether the plea in bar is good or bad.

Unless the unexecuted sentence of the court-martial is such

a judgment as will support a plea of *autrefois convict*, it is clear that the ruling of the State judge at the trial was correct, even if it could be admitted that it is not required of such a plea that it should aver that the former judgment is in full force and effect. Due order was given by the commander of the department that the sentence should be carried into execution; but it was not, and the record fails to show for what reason the order was disobeyed or neglected. It may have been countermanded, or the prisoner may have deserted, or the occurrence may possibly be accounted for in some other way. However that may be, it is clear that the sentence was never executed, and it is perhaps equally clear that it has become a nullity by the intervention of peace.

No sentence of a court-martial inflicting the punishment of death shall be carried into execution until it shall have been confirmed by the President, except in the enumerated cases of persons, including murderers, convicted in time of war; but the same article provides that in such excepted cases the sentence of death may be carried into execution, upon confirmation by the commanding general in the field, or the commander of the department, as the case may be. Rev. Stat., art. 105, p. 240.

Approved and confirmed, as the sentence was, by the commander of the department, and not by the President, it may well be contended that it became abandoned when peace came. Peace came in the State where these proceedings took place on the 2d of April, 1866, as expressly decided by this court (*The Protector*, 12 Wall. 700); and the plea in bar in this case was not filed until May 31, 1875, nine years after the war of the rebellion terminated in that State.

Unapproved as the sentence of the court-martial was by the President, it is clear that it had become inoperative before the plea in bar was filed, and consequently was not at that time such a judgment as would support the plea of *autrefois convict*, — the rule being, by all the well-considered authorities, that the judgment, in order that it may be sufficient to support such a plea, must be in full force and effect, and not in the least reversed or made void. *The King* v. *Wildey*, 1 Man. & Sel. 188; Bishop, Cr. Proced. (2d ed.), sect. 808.

Opposed to this is the suggestion that the prisoner served in

the army subsequent to the sentence of the court-martial; but, if so, the inference is irresistible that he got back by deception or misrepresentation; nor is it believed to be true that he now holds an honorable discharge from the public military service.

Even if a circuit court may grant the writ of *habeas corpus* to a prisoner convicted of murder in a State tribunal, and in custody on appeal under process from the highest court of a State, it by no means follows that the order of such a judge discharging such a prisoner from custody under a State law is a bar to the further prosecution of the indictment under which he was held prior to such order of discharge.

Prior to the passage of the act of the 5th of February, 1867, the universal rule, as enacted by Congress, was, "that writs of *habeas corpus* shall in no case extend to prisoners in jail, unless where they are in custody under and by color of the authority of the United States, or are committed for trial before some court of the same, or are necessary to be brought into court to testify." 1 Stat. 82; 14 id. 385.

Apply that rule to the case, and it is clear to a demonstration that the Circuit Court had no jurisdiction to grant the writ of *habeas corpus*, under which the prisoner was discharged. Both parties concede that proposition; but the prisoner, through his counsel, insists that the jurisdiction to issue the writ and order the discharge was plainly conferred by the subsequent act of Congress.

Justices and judges of the courts of the United States have power, in addition to the authority previously conferred, to grant writs of *habeas corpus* in all cases where any person may be restrained of his or her liberty in violation of the Constitution or of any treaty or law of the United States. 15 id. 385. Evidently the last act does not repeal the former, its only effect being to confer additional authority upon the subject.

Writs of *habeas corpus* may be granted to deliver the applicant from imprisonment, even when confined under State process, if he is so confined in violation of the Constitution or a law of Congress, and not otherwise. Except when the prisoner is restrained of his liberty in violation of the Constitution or law of Congress, the jurisdiction of the Federal courts in

such cases remains as it stood before, and does not extend to prisoners in custody under State process.

Grant that, and it follows that the order of the Circuit Court discharging the prisoner from custody under the State process was a nullity, at least for two reasons: 1. Because the plea of *autrefois convict* was bad; and if bad, then it did not appear in contemplation of law that he was a second time put in jeopardy by the pending indictment. 2. Because it clearly appears that the sentence of the court-martial was not such a judgment as will support the plea of *autrefois convict;* and if not, then it did not appear that the prisoner was restrained of his liberty in violation of the Constitution or a law of Congress.

Jurisdiction to try and punish offenders against the authority of the United States is conferred upon the Circuit and District Courts, but those courts have no jurisdiction of offences committed against the authority of a State.

Criminal homicide, committed in a State, is an offence against the authority of the State, unless it was committed in a place within the exclusive jurisdiction of the United States. Offences of the kind, if committed by a person in the military service of the United States, are breaches of military discipline, and the offender may be tried and sentenced by a court-martial; but the sentence, if it awards the punishment of death, cannot be carried into execution until it is approved and confirmed by the President, except in cases of persons convicted in time of war, as before explained. Cases arise, undoubtedly, where a conqueror, having displaced the courts of the conquered country, may establish special tribunals in their place; but it is quite sufficient to say, in response to that suggestion, if made, that no such question is involved in the case before the court, as fully appears from the plea in bar filed by the prisoner, — the only question being whether the sentence of the court-martial is such a judgment as, if well pleaded, will support the plea of *autrefois convict* in bar of an indictment for murder committed in violation of a State law.

Military conquerors, in time of war, may doubtless displace the courts of the conquered country, and may establish civil tribunals in their place for administering justice; and where

that is done, it is unquestionably true that the jurisdiction of the tribunals established by the conqueror is rightful and conclusive. *United States* v. *Rice*, 4 Wheat. 246; *Cross* v. *Harrison*, 16 How. 164.

But that concession only shows that the military occupant holding the possession of a State has the belligerent power to reorganize the local government as the means of enforcing the sovereignty of the conqueror; but the mere occupancy of the territory by his forces does not necessarily displace the local tribunals of justice, as the conqueror, if he sees fit, may suffer them to remain.

Courts of justice for the trial of criminal offences were not established by the military conqueror of the State, nor was the prisoner tried before any such tribunal. Nothing of the kind is set up in the pleas in bar, nor is any thing of the kind pretended in argument. Instead of that, the record shows that the tribunal was a general court-martial, convened under the rules and regulations for the government of the army, which were as applicable at the time in the loyal as in the rebellious States.

Contradicted as such a theory is by every line of the record, it is clear that it has no proper foundation, either in truth, law, or justice.

Without more, the two objections to the plea of *autrefois convict* — to wit, that it is bad in form, and that the sentence of the court-martial, at the time it was pleaded, was not such a judgment as would support such a plea — are amply sufficient to show that the judgment of the State court should be affirmed; but I am also of the opinion that the order of the Circuit Court discharging the prisoner from imprisonment is a nullity.

Discussion to show that wilful murder is an offence against the authority of the State is unnecessary, as that proposition is fully established by the law of the State. 3 State Stat. 43. Grant that, and still it is suggested that it is also a military offence, which may be tried and punished by court-martial, which is admitted without hesitation; but it is not admitted that an unexecuted sentence of such a court-martial is a bar to a subsequent prosecution by the State for the murder of one of her citizens. *The State* v. *Rankin*, 4 Cold. (Tenn.) 145.

An offence, says Mr. Justice Grier, speaking for the whole court, means, in its legal signification, the transgression of a law; and he adds, that a man may be compelled to make reparation in damages to the injured party, and may be liable also to punishment for a breach of the public peace in consequence of the same act, and in that way may be said, in common parlance, to be twice punished for the same offence.

Every citizen of the United States is also a citizen of a State or Territory. He may, says the same learned judge, be said to owe allegiance to two sovereigns, and may be liable to punishment for an infraction of the laws of either, and the same act may be an offence or transgression of the laws of both. Thus, an assault on the marshal, and hindering him in the execution of legal process, is a high offence against the United States, for which the perpetrator is liable to punishment; and the same act may also be a gross breach of the peace of the State, if it results in a riot, assault, or a murder, and may subject the same person to a punishment under the State laws for a misdemeanor or felony. That either or both governments may punish such offender cannot be doubted, yet it cannot be truly averred that the offender has been twice punished for the same offence, but only that by one act he has committed two offences, for each of which he is punishable; nor could he plead one punishment in bar to an indictment by the other, for the reason that the act committed was an offence against the authority of each. *Moore* v. *Illinois*, 14 How. 13. Two more cases decided by this court are to the same effect, and are supported by substantially the same course of reasoning. *Fox* v. *State of Ohio*, 5 How. 410; *United States* v. *Marigold*, 9 id. 560.

In the first case, the indictment was for "passing and uttering a certain piece of false, base, and counterfeit coin, forged and counterfeited to the likeness and similitude of the good and legal silver coin" called a dollar, passing currently in the State. By the report of the case it appears that the defendant, having been convicted, removed the cause here, and assigned for error that the State court had no jurisdiction of the offence as defined in the State law. But this court held that the State law was valid, that offenders committing offences

falling within the competency of different authorities to restrain and punish them, may properly be subjected to the consequences which those authorities ordain and affix to their perpetration.

When examined with care, it will also be found that the second case decides the same point, — that the same act may constitute an offence against both the State and the Federal governments, and may draw to its commission the penalties denounced by either as appropriate to its character in reference to each.

Decided support to that conclusion is also derived from certain eminent text-writers, as, for example, Mr. Cooley says, "The States may constitutionally provide for punishing the counterfeiting of coin and the passing of counterfeit money, since these acts are offences against the State, notwithstanding they may also be offences against the nation." Cooley, Const. Lim. (4th ed.) 25.

Corresponding views are expressed by Mr. Wharton, as follows: Nor should it be forgotten that an offence may have in such cases two aspects, so that one sovereign may punish it in the first aspect, and the other in the second, which is a striking illustration of the case before the court. Reference is made by the author to some of the difficulties which arise in such a case; and he suggests as the means of their solution that "supplementary jurisdiction is in such cases to be maintained, but that cumulative punishment is to be avoided by the interposition of executive clemency." Wharton, Cr. Law (7th ed.), 435; Whiting, War Powers (43d ed.), 188.

Eminent judicial support to that view is also found in the Circuit Court, as exhibited in the opinion of Mr. Chief Justice Taney. *United States* v. *Amy*. Though unreported in the volume of his decisions, it will be found published in a note to the case of *Negro Ann Hammon* v. *The State*, 14 Md. 135. Congress enacted that, if any person shall steal a letter from the mail, the offender shall, upon conviction, be imprisoned not less than two nor more than ten years. 4 Stat. 109. Questions of various kinds were contested, and in speaking of the liability of a party to be convicted under a State law for the offence therein, the Chief Justice remarked, that in maintaining

the power of the United States to pass this law it is proper to say that as these letters, with the money within them, were stolen in the State, the party might undoubtedly have been punished in the State tribunals according to the law of the State, without any reference to the post-office or the act of Congress, because from the nature of our government the same act may be an offence against the laws of the United States and also of a State, and be punishable in both; and having cited *Fox* v. *State of Ohio* (5 How. 10) and *United States* v. *Marigold* (9 id. 560), he added, "and the punishment in one sovereignty is no bar to his punishment in the other."

These considerations, it would seem, are sufficient to show that there is no error in the record; but still it is deemed proper to add, that I am of the opinion that the Circuit Court had no jurisdiction to grant the writ of *habeas corpus*, and that the order discharging the prisoner is without legal effect. Nothing can be more certain in legal decision than the proposition that no power to grant such a writ in such a case is conferred by the fourteenth section of the Judiciary Act; and it is equally clear that the power to grant the writ in such a case, and to deliver the applicant, is not found in the act of the 5th of February, 1867, unless the petitioner is restrained of his or her liberty in violation of the Constitution or of some treaty or law of the United States. *Barron* v. *Mayor, &c. of Baltimore*, 7 Pet. 248.

Extensive as the differences of opinion are in this case, all will agree, I suppose, that the decision of the judge that he had jurisdiction to grant the writ of *habeas corpus* in such a case is not conclusive; and if not, then I submit to every person interested in the question, that it is clearly shown that the jurisdiction has not been conferred by an act of Congress. *Ex parte Milburn*, 9 Pet. 704; *Ridgway's Case*, 2 Ashm. (Pa.) 247.

Persuasive and convincing confirmation of the dual character of the jurisdiction in such cases is also derived from the fact that the military authorities of the United States hold that the conviction and sentence of such an offender by the proper judicial tribunal of the State is no bar to the subsequent proceedings of a court-martial in a case where the criminal act for

which the accused was indicted is also a breach of the rules and articles of war. 8 Op. Att'y-Gen. 749.

Officers and soldiers of the army who do acts criminal both by the military and the municipal law, are, under certain conditions and limitations, subject to be tried by the civil authorities in preference to the military; but the conviction or acquittal of the party by the civil authorities will not discharge the officer or soldier from responsibility for the military offence involved in the same facts. *Steiner's Case*, 6 id. 413.

Martial or military law, says Tytler, does not in any respect either supersede or interfere with the civil and municipal laws of the realm. Hence it appears that soldiers are, equally with all other classes of citizens, bound to the same strict observance of the laws of the country and the fulfilment of all their social duties, and are alike amenable to the ordinary civil and criminal courts of the country for all offences against those laws and breach of those duties. P. 153.

A former acquittal or conviction of an act by a civil court, says Benêt, is not a good plea in bar before a court-martial on charges and specifications covering the same. Benêt, Courts-Martial, 115.

"Assault and battery and homicide," says Mr. Cushing, "are violations of the municipal laws of the place where committed, to be tried and punished by the proper tribunal of the State or Territory whose peace and laws are broken and offended." But the military authorities maintain that the same acts being done by an officer or soldier of the army, over and above the breach of the local law, is also a violation of the rules and articles for the government of the army, and that in such a case the offender is punishable both as a citizen subject to the municipal law of the place, and as an officer or soldier subject to the rules and regulations enacted by Congress for the government of the army. *Howe's Case*, 6 Op. Att'y-Gen. 511; Benêt, Courts-Martial, 117; *State* v. *Yancey*, 1 Law Repos. (N. C.) 133; *State* v. *Woodfin*, 5 Ired. (N. C.) L. 199.

Viewed in the light of these suggestions, I am of the opinion that there is no error in the record, and that the judgment of the Supreme Court of the State should be affirmed.

WELCH v. COOK.

1. The act of the legislative assembly of the District of Columbia of June 26, 1873, exempting from general taxes for ten years thereafter such real and personal property as might be actually employed within said District for manufacturing purposes, provided its value should not be less than $5,000, did not create an irrepealable contract with the owners of such property, but merely conferred a bounty liable at any time to be withdrawn.
2. Congress, by the act of June 20, 1874 (18 Stat. 117), which superseded the then existing government of the District, declared that for the fiscal year ending June 30, 1875, there should "be levied on all real estate in said District, except that belonging to the United States and to the District of Columbia, and that used for educational and charitable purposes," certain specified taxes. *Held*, that under said act real property used for manufacturing purposes, although within the exemption granted by the act of the legislative assembly, became subject to taxation.

APPEAL from the Supreme Court of the District of Columbia.

On the 26th of June, 1873, the legislative assembly of the District of Columbia enacted that "all property, real and personal, which may hereafter be actually employed within the limits of the District of Columbia for manufacturing purposes, shall be exempt from all general taxes for a period of ten years from the date of this act going into effect: *Provided*, that the value of the property so employed for manufacturing purposes shall not be less than $5,000." Laws Dist. of Col. 126.

The fourth section of the act of Congress approved June 20, 1874 (18 Stat. 117), enacts as follows: —

"That for the support of the government of the District of Columbia, and maintaining the credit thereof, for the fiscal year ending June 30, 1875, there shall be levied on all real estate in said District, except that belonging to the United States and to the District of Columbia, and that used for educational and charitable purposes, the following taxes, namely."

Under this act the commissioners of the District assessed, for the taxes for the year ending June, 1875, certain real property of Welch within the District, which was employed for manufacturing purposes, and was of the value of $5,000.

His bill of complaint alleges that on the faith of the above

act of the legislative assembly he expended large sums of money in improving his said property; that, in pursuance of the said act, the commissioners exempted it from the taxes of the year ending June, 1874, but are now about to sell it for the taxes of 1875, and that these proceedings cast a cloud upon his title. He asks for a perpetual injunction to restrain the collection of these taxes, and for such other relief as may be necessary.

To this bill the defendants, who are the tax-collector and the commissioners of the District, demurred. The demurrer was sustained at the special term of the Supreme Court of the District, which action having been affirmed at the general term, Welch appealed to this court.

Mr. Philip Phillips and *Mr. William A. Maury* for the appellant.

Mr. Albert G. Riddle, contra.

MR. JUSTICE HUNT, after stating the case, delivered the opinion of the court.

It is not open to reasonable doubt that Congress had power to invest, and did invest, the District government with legislative authority, or that the act of the legislative assembly of June 26, 1873, was within that authority. We shall therefore consider the question as if that act exempting manufacturing property from taxation had been passed directly by Congress. It does not create a contract in the sense that it cannot be repealed. It has been frequently held that the incorporation of a company by special charter, with the exemption of its lands or other property from taxation, creates, upon the acceptance of the charter, a contract which will insure that exemption during the period specified. But the present case does not come within that rule. This is a bounty law, which is good as long as it remains unrepealed; but there is no pledge that it shall not be repealed at any time. *Salt Company* v. *East Saginaw*, 13 Wall. 373.

The counsel for the appellant correctly states the question as this: Has the act of the legislative assembly of June, 1873, been repealed or suspended by the act of Congress of June 20, 1874?

It is also correctly stated, as a legal proposition, that a second law on the same subject does not, without a repealing clause or negative words, repeal a former one, unless its provisions are so clearly repugnant as to imply a negative. *Beals* v. *Hale*, 4 How. 37; *Ex parte Yerger*, 8 Wall. 85.

We are, however, of the opinion that we cannot do otherwise than hold that this case was correctly decided; that is, that by the more recent act it was intended to subject to taxation all the real property in the District, except such as was specifically exempted.

We are to presume that Congress knew that, as the law stood on the 20th of June, 1874, the property in the District was liable to taxation, with certain exceptions, and that it knew of what such exceptions consisted. We are also to presume that it appreciated the effect of its action when it took upon itself anew, and in derogation of the local authorities, the duty of fixing the subjects of taxation; and that it knew that the result of declaring all the property, with certain exceptions, to be liable to the payment of taxes for the year ending June, 1875, was to make that act stand in the place of all others upon the subject.

The exemption of manufacturing property, as we have shown, was a bounty merely revocable at any time by the legislature. The year following this expression of its bounty, in passing an act to obtain means "for the support of the government and maintaining the credit thereof," it enacts that "there shall be levied on all real estate in said District . . . the following taxes, namely." This general language was not used unadvisedly, without a present remembrance that there were certain kinds of property not intended to be included, but which would be so included unless particularly noticed. Therefore it was added, "except that belonging to the United States and to the District of Columbia, and that used for educational and charitable purposes." The bounty of the government previously extended to property used for the purposes of education, and in dispensing its charities to the poor, the insane, the destitute orphan, the aged and infirm, was still continued. Its bounty of exemption, before given to those engaged in manufactures and employing at least $5,000 therein, did not present the same

sentimental question to the legislator. He may well have thought it a wise charity, a merciful duty, to relieve the one, and to allow the others to bear the ordinary burdens of property engaged in traffic or manufacture, and used for the purpose of gain.

The exemptions set forth in the act of Congress of March 3, 1875 (18 Stat. 503), are more in detail, but of the same character with those of 1874, and indicate a persistent intention in Congress to include manufacturing property as a proper subject of taxation.

But it is to be observed that the act of June 20, 1874, is the act of a different body from that which adopted the act of 1878, and is a part of an act of Congress organizing a new and entirely different system of government. Id. 116, 117.

The first section of the act of 1874 provides that all the general offices of the District then existing, except that of delegate in Congress, shall be abolished, the office of delegate in Congress continuing until the end of the existing term. The government, then carried on by an executive, a secretary, a legislature, and a board of public works, is superseded by a commission of three persons (appointed by the President), whose powers and duties are strictly prescribed. The rules respecting the collection of taxes then assessed, including a prohibition (by sale or hypothecation) of an anticipation thereof, are laid down, and the compensation of all officers, except teachers in public schools, is reduced twenty per cent per annum. Certain duties theretofore under the control of the board of public works are vested in an officer of the army, to be detailed by the President, under the supervision of the commissioners. In its fourth section it then proceeds to direct the levy of a tax of three dollars for each one hundred dollars of the assessed value of all the real estate in the city of Washington, and two dollars and fifty cents upon that situate in the city of Georgetown, except that belonging to the United States or the District of Columbia, and that used for educational and charitable purposes.

Under these circumstances, and prefaced as was the act by the recital that this levy was made to support the government and maintain its credit, it is apparent that the act of Congress

was intended to create a separate system, and to be independent of the action of all preceding bodies. Other and different exemptions had before existed; no settled system had been adopted. The act of the legislative assembly of 1871, fixing the taxes for that year, gave more than forty exemptions in great detail, covering an entire page in the statute-book (p. 26); that of the same body, fixing the taxes for 1872, exempted only parsonages, churches, the ground on which they stood, and burial-grounds (p. 109); here it is declared that all real estate shall be taxed, except that herein specifically exempted. We think that the system in regard to taxation, including what should be taxed, the rates, and the exemptions from taxation, was intended to be an independent one, to abolish existing impositions or exemptions, and to form a complete system of itself.

Nor are we able to see that this action involves a breach of faith towards the owner of the manufacturing property. Conceding, as the plaintiff must and does, that the exemption of his property was of the bounty of the legislature, he knew when he accepted it that it was liable to be revoked whenever either the local legislature or Congress should be of the opinion that the public interests demanded such action. He could not but realize that an assessment of three per cent upon the value of property in Washington, or two and a half per cent upon that in Georgetown, created a heavy burden. Others felt it as he did, and it is reasonable to suppose that Congress considered it a duty to lighten the burden of taxation, by increasing the subjects of it, as far as justice required.

Upon the whole case, we are of the opinion that the decree of the court below was correct.

Decree affirmed.

MR. JUSTICE FIELD dissented.

UNITED STATES v. CLAFLIN.

1. An action of debt cannot be maintained by the United States to recover the penalties prescribed by the fourth section of the act of Congress approved July 18, 1866 (14 Stat. 179), entitled "An Act to prevent smuggling, and for other purposes." That act contemplated a criminal proceeding and not a civil remedy.
2. Nor does sect. 3082 of the Revised Statutes authorize a civil action.
3. A recital in a statute, that a former statute was repealed or superseded by subsequent acts, is not conclusive as to such repeal or supersedure. Whether a statute was so repealed is a judicial, not a legislative question.
4. A statute covering the whole subject-matter of a former one, adding offences and varying the procedure, operates not cumulatively, but by way of substitution, and, therefore, impliedly repeals it. In the absence of any repealing clause, it is, however, necessary to the implication of a repeal that the objects of the two statutes are the same. If they are not, both statutes will stand, though they refer to the same subject.
5. The second section of the act of Congress of March 3, 1823 (3 Stat. 781), entitled "An Act to amend an act entitled 'An Act further to regulate the entry of merchandise imported into the United States from any adjacent territory,'" was supplied by the fourth section of the act of July 18, 1866 (*supra*), and thereby repealed. *Stockwell* v. *United States* (13 Wall. 531) reviewed.

ERROR to the Circuit Court of the United States for the Southern District of New York.

The facts are stated in the opinion of the court.

The Attorney-General and *The Solicitor-General* for the United States.

Mr. Joseph H. Choate, contra.

MR. JUSTICE STRONG delivered the opinion of the court.

This was an action of debt brought by the United States to recover the amounts of several forfeitures or liabilities alleged to have been incurred by the defendants in consequence of their having received, concealed, and bought goods, wares, and merchandise illegally imported, knowing them to have been illegally imported and liable to seizure. The declaration contains thirty counts. Of these, the first and every alternate odd-numbered one is founded on the act of Congress of March 3, 1823. 3 Stat. 781, c. 58, sect. 2. They charge illegal importations at different times between Dec. 1, 1871, and Sept. 1,

1873, inclusive; also receipts, concealments, or purchases of the goods by the defendants between the first-mentioned date and Sept. 2, 1873, inclusive, with knowledge that the goods had been illegally imported. All the other counts, those even-numbered, are founded upon the fourth section of the act of July 18, 1866. 14 id. 179, c. 201, sect. 4. The importations, receipts, concealments, or purchases charged in these counts are averred to have taken place at the times designated in the odd-numbered counts.

To the entire declaration the defendants interposed a general demurrer, upon which the Circuit Court gave judgment in their favor. Whether this judgment was correct is the underlying question we have now to consider. That the counts framed under sect. 4 of the act of 1866 cannot be sustained is too clear for debate, and the government very properly has abandoned them as unsustainable. That act contemplated a criminal proceeding, and not a civil action of debt. It imposed a penalty for receiving, concealing, buying, selling, or in any manner facilitating the transportation, concealment, or sale of goods illegally imported. The penalty was a fine on conviction, not exceeding $5,000 nor less than $50, or imprisonment, or both, at the discretion of the court. It is obvious, therefore, that its provisions cannot be enforced by any civil action, certainly not in an action of debt.

The single question left, then, is whether the counts founded on the act of 1823 are sustainable. The second section of that act was as follows: —

"That if any person or persons shall receive, conceal, or buy any goods, wares, or merchandise, knowing them to have been illegally imported into the United States, and liable to seizure by virtue of any act in relation to the revenues, such person or persons shall, on conviction thereof, forfeit and pay a sum double the amount or value of the goods, wares, or merchandise so received, concealed, or purchased."

If this section was in force in 1871, 1872, and 1873, when the illegal importations alleged in this case were made, it is not denied that the odd-numbered counts in the declaration have a sufficient basis on which to stand, and that the demurrer

should have been overruled. But the defendants contend that the section was repealed by the act of 1866, so far as it can affect transactions occurring after the passage of the later act; and such was the opinion of the Circuit Court. The act of 1866 did not expressly repeal the second section of the act of 1823. The forty-third section repealed several acts specified by it, some prior and others subsequent to the act of 1823, and concluded with the sweeping clause, "and all other acts and parts of acts conflicting with or supplied" by it. If, therefore, it worked a repeal of the said second section, it must be because it supplied the provisions of that section, or was in conflict with them. And such supply and repugnance must plainly appear. The Circuit Court placed some reliance — their principal reliance, indeed — upon the action of Congress when the Revised Statutes were enacted in 1874. Those statutes undoubtedly repealed the act of 1823, if it had not been repealed before. In sect. 5596 it was thus enacted:

"All acts of Congress passed prior to said first day of December, 1873, any portion of which is embraced in any section of said revision, are hereby repealed, and the section applicable thereto shall be in force in lieu thereof; all parts of such acts not contained in such revision having been repealed or superseded by subsequent acts, or not being general or permanent in their nature."

As a portion of the act of 1823 was carried into the Revised Statutes (see sect. 3099), and the second section was not, that section was covered by the repealing clause, unless it had been repealed before. But that clause indicates a belief on the part of Congress that it had been previously repealed, and, doubtless, that it was repealed by the act of 1866. The indication is found in the words that declare all parts of acts not contained in the revision, but other portions of which are, to have been repealed or superseded by subsequent acts. This, however, though entitled to great respect, ought not to be considered as more than an expression of opinion or a recital of belief. It is not in the form of an enactment. It is not a declaration of congressional will. It is not a rule for the future. It certainly is not conclusive that the second section was repealed or superseded by the act of 1866, or by any other act

prior to the enactment of the revision. Whether a statute was repealed by a later one is a judicial, not a legislative question. And even a declaratory act, or an act directing how a former act shall be construed, is inoperative on the past, though controlling in future. *Postmaster-General* v. *Early*, 12 Wheat. 136.

It is, therefore, still a question of judicial construction whether the second section of the act of 1823 was in fact repealed by the act of 1866, that is, whether it was in conflict with that later act or supplied by it; for, as we have said, the act of 1866, while repealing expressly certain prior acts particularly described (the act of 1823 not being one of them), repealed only such other acts or parts of acts as were in conflict with it or were supplied by it.

In *Stockwell* v. *United States* (13 Wall. 531), the question was before us. That was an action of debt brought by the United States to recover double the value of certain importations alleged to have been illegally made, and received, concealed, or bought by the defendants, with knowledge that the goods had been illegally imported. The action was founded on the second section of the act of March 3, 1823, as are the counts we are now considering. The importations were made and the goods were received and sold before the passage of the act of 1866. We held that the action would lie, and, as the jury found the defendants knew the goods had been illegally imported, that they had incurred the liabilities imposed by the second section of the act of 1823. Hence we gave judgment in favor of the United States. We are still of the opinion that the judgment was correct; for even if the act of 1823 was repealed by that of 1866, the liabilities incurred under it before its repeal were preserved, if not by the forty-fourth section of the repealing act, certainly by the act of Feb. 18, 1867, entitled "An Act supplementary to an act to prevent smuggling, and for other purposes," approved July 18, 1866. The first section of that act enacted as follows: —

"That the provisions of the act of Congress approved July 18, 1866, entitled 'An Act to prevent smuggling, and for other purposes,' shall be so construed as not to affect any right of suit or

prosecution which may have accrued under any prior act of Congress repealed or supplied by said act previous to July 18, 1866; and all such suits or prosecutions as have been or shall be commenced under such prior acts for acts committed previous to July 18, 1866, shall be tried and disposed of, and judgment or decree executed, as if said act of July 18, 1866, had not been passed, any thing therein contained to the contrary notwithstanding."

As the offences charged in that case occurred before the act of 1866 was passed, they were within this declaratory act, and therefore the act of 1823 was enforceable against the offenders.

The act of 1867 was not called to our notice when the case of *Stockwell* v. *The United States* was before us. If it had been, it would have been unnecessary to consider at all whether the act of 1866 had repealed any former acts. But in the absence of any reference to it, we felt called upon to inquire whether the act of 1823 was repealed by the enactment of 1866; and we held that its second section was not, certainly not so as to affect that suit, brought to enforce liabilities incurred before the later act was passed. It is true that in reaching this conclusion we took broader ground. We argued that the second section of the act of 1823 and the fourth section of the act of 1866 were not in conflict with each other, and that the former was not supplied by the latter. We regarded the first as a remedial provision intended to secure compensation for interference with the rights of the United States, and for that purpose giving a civil remedy, while the second was, as we thought, strictly penal and not at all remedial. Our inference, therefore, was that the later act did not supply the provisions of the former, and should not be regarded as a substitute for them. A further consideration, however, and a more extended examination than we were then able to give the subject, have led us to doubt the correctness of the opinion we expressed when the case of Stockwell was before us, though not the correctness of our judgment in the case. The real question is, Was the act of 1866 intended by Congress to be a substitute for the second section of the act of 1823? When it was enacted, Congress had in view as well the offence described in the act

of 1823 as other offences against the revenue laws. It mentions *in ipsissimis verbis* the offence created by that act. Its provisions are also broader in their scope. It includes offences by importers. It adds to the offences described in the act of 1823, selling the illegally imported goods, and facilitating in any manner their transportation, concealment, or sale after their importation, knowing them to have been imported contrary to law; and for each of these offences, as well as for those described in the act of 1823, it imposes a forfeiture of the goods, and prescribes a fine on conviction not exceeding $5,000 nor less than $50, or imprisonment, or both, at the discretion of the court.

What, then, was its effect upon the prior statute? The principles of legal construction to be applied to such a case are well known. While repeals by implication are not favored, and while it is held that a statute is not repealed by a later one containing no repealing clause, unless the later statute is positively repugnant to the former, or is a plain substitute for it, supplying its provisions, it is still true that repeal or no repeal, substitution or no substitution, is a question of legislative intention, and there are acknowledged rules for ascertaining that intention.

In *Michell* v. *Brown* (1 El. & El. 267), it was ruled in the Court of Queen's Bench, that if a later statute again describes an offence created by a former statute, and affixes a different punishment to it, varying the procedure, &c., the later operates by way of substitution, not cumulatively, and the former statute is repealed. A similar rule was asserted by Baron Bramwell in *Ex parte Baker*, 2 H. & N. 219. So in *Barry* v. *The Croydon Gas Co.* (15 C. B. N. S. 568), an act imposing a penalty of £200 upon the undertaker of any gas-works for fouling any stream, &c., to be recovered by the person into whose water the foul substance should be conveyed, was held to repeal by implication a former act describing the same offence and imposing the same penalty, to be sued for by any common informer. The two penalties were held not to be cumulative. The principle of these rulings has been frequently recognized by courts in this country.

In *Norris* v. *Crocker et al.* (13 How. 429), it was said by

this court, "As a general rule, it is not open to controversy, that, where a new statute covers the whole subject-matter of an old one, adds offences, and prescribes different penalties for those enumerated in the old law, the former is repealed by implication, as the provisions of both cannot stand together." That was a case in most points much like the present. The older statute had imposed a penalty for certain offences,—namely, obstructing a claimant in arresting a fugitive from labor, rescuing the fugitive after his arrest, or harboring and concealing him with knowledge that he was a fugitive; and the statute had enacted that the claimant might recover the penalty for his own benefit, and also reserved to him a right of action in damages for the actual injuries he might have sustained, be they more or less. The later statute imposed a greater penalty, and added imprisonment for the same offences, gave no right to the claimant to recover the penalty, but gave him a right to recover by way of damages the sum of $1,000, for each fugitive lost by reason of the offences. This court held that the two statutes were in conflict, and consequently that the earlier was repealed.

It is, however, necessary to the implication of a repeal that the objects of the two statutes are the same, in the absence of any repealing clause. If they are not, both statutes will stand, though they may refer to the same subject. Maxwell on the Interpretation of Statutes, 153. This consideration had weight with us when *Stockwell* v. *The United States* was decided. We then regarded the act of 1823 not so much punitive as remedial. This seemed to us to be evinced by the fact that the amount recoverable under that act by the United States was made proportional to the value of the goods wrongfully concealed or bought, and not in the least proportional to the degree of criminality of the act of receipt, purchase, or concealment. Hence we regarded the claim for double the value of the goods concealed, received, or bought as only a claim for indemnity for abstracting goods forfeited for illegal importation. And we thought the object of the act of 1866 was only to punish the offence criminally. If this were truly the purpose of the acts, their objects would not have been the same, and, therefore, the second statute could not be regarded as repealing the

former. But a renewed and more careful examination of the two statutes, aided as it has been by the argument of counsel, has convinced us that Congress, in the act of 1866, had in view not only punishment of the offence described, but indemnity to the government for loss sustained in consequence of the criminal conduct of those guilty of the offence. The later act denounces a forfeiture of the goods concealed, &c., no matter in whose hands they may be found. If the forfeiture of double the value of the goods denounced by the act of 1823 was designed to secure indemnity to the government for the wrong done, the forfeiture of the goods themselves, declared in the act of 1866, must have been intended for the same purpose, and the fine and imprisonment were superadded as a vindication of public justice. If this is so, as we now think it is, the act of 1866 supplied the provisions of the second section of the act of 1823, and, consequently, would have repealed them had it contained no repealing clause. But the forty-third section of the act of 1866 expressly repealed "all other acts and parts of acts conflicting with or supplied by it." If the act of 1823 was not in conflict with the fourth section of the act of 1866, it was supplied by it, as we now think, and it was, therefore, repealed.

It follows that no suit can be maintained, by force of the act of 1823, for any acts done after the enactment of the act of 1866. The demurrer was, therefore, well sustained.

Judgment affirmed.

NOTE. — In *United States* v. *Claflin*, error to the Circuit Court of the United States for the Southern District of New York, which was argued at the same time and by the same counsel as was the preceding case, MR. JUSTICE STRONG, in delivering the opinion of the court, remarked: —

The declaration in this case, to which the defendants demurred generally, contained fourteen counts, the first and each alternate odd count of which rests upon the second section of the act of Congress of March 3, 1823, entitled "An Act to amend an act entitled 'An Act further to regulate the entry of merchandise imported into the United States from any adjacent territory.'" 3 Stat. 781. These counts all charge that the defendants, at various times between the fourteenth day of February, 1874, and the seventeenth day of November, 1874, inclusive, received, bought, and concealed goods, wares, and merchandise illegally imported into the United States, knowing the goods to have been illegally imported, and they assert the right of the United States to recover the double value of the goods. That such a recovery cannot be had, because the second section of

the act of 1823 was repealed by the act of July 18, 1866, we have ruled in *United States* v. *Claflin* (*supra*, p. 546). So far as those counts extend, therefore, the demurrer to the declaration was properly sustained.

The counts 2, 4, 6, and 8 are based upon the fourth section of the act of 1866, which, as we have seen in the case mentioned, contemplated only a criminal proceeding, and not a civil suit, as this is. Those counts, therefore, have no foundation. The remaining counts, Nos. 10, 12, and 14, are based upon sect. 3082 of the Revised Statutes, which is but a re-enactment of the act of 1866. It was, therefore, correct that the Circuit Court sustained the demurrer to the entire declaration.

Judgment affirmed.

RAILWAY COMPANY *v.* SAYLES.

1. A party who invents a new machine never used before, and procures letters-patent therefor, acquires a monopoly as against all merely formal variations thereof; but if the advance towards the thing desired is gradual, and proceeds step by step, so that no one can claim the complete thing, each inventor is entitled only to his own specific form of device.
2. Double brakes, operating upon the two trucks of a railroad car at the same time, by a single force, through the medium of connecting rods, had been publicly used before Thompson and Bachelder invented the Tanner brake. Only the specific improvement which they made could, therefore, be covered by the letters-patent for that brake. The latter were not infringed by the Stevens brake, for which letters-patent No. 8552 were issued Nov. 25, 1851, though it was invented after the Tanner brake, inasmuch as it is another and different specific form of brake. The parties are entitled to the specific improvement they respectively invented, provided the later does not include the earlier.
3. Though the double brakes used before the Tanner brake was invented may have been much less perfect than it, and may have been superseded by it and by other improved forms of brake, nevertheless, they were actually used, and to some good purpose. Their construction and use, though with limited success, were sufficient to contravene the pretension of Thompson and Bachelder that they were the pioneers in this department of invention.
4. The original application for a patent made by Thompson and Bachelder was filed in the Patent Office in June, 1847. Having been rejected, it remained there unaltered until 1852, when it was considerably amended, and letters-patent No. 9109 were, July 6, 1852, granted thereon to Tanner, as assignee. *Held*, that no material alterations introduced by such amendments could avail as against parties who had introduced other brakes prior thereto.
5. The original application for letters-patent (with its accompanying drawings and model), filed by an inventor, should possess great weight in showing what his invention really was, especially where it remains unchanged for a considerable period, and is afterward amended so as to have a broader scope. Amendments embracing any material variation from the original

application — any thing new, not comprised in that — cannot be sustained on the original application, and should not be allowed; otherwise, great injustice might be done to others who may have invented or used the same things in the mean time.

6. The law does not permit enlargements of an original specification any more than it does where letters-patent already granted are reissued. It regards with jealousy and disfavor any attempt to enlarge the scope of an application once filed, or of letters-patent once granted, the effect of which would be to enable the patentee to appropriate other inventions made prior to such alteration, or improvements which have gone into public use.

APPEAL from the Circuit Court of the United States for the Northern District of Illinois.

Argued by *Mr. George Payson* for the appellant.

Contra, by *Mr. Albert H. Walker* and *Mr. S. D. Cozzens*, the former on the question as to validity and accounting, and the latter on the question of infringement.

The facts are stated in the opinion of the court.

MR. JUSTICE BRADLEY delivered the opinion of the court.

This suit was commenced in the Circuit Court in December, 1861, by bill in equity filed by Thomas Sayles, the appellee, on letters-patent No. 9109, for an improvement in railroad-car brakes, issued on the sixth day of July, 1852, to Henry Tanner, as assignee of Lafayette F. Thompson and Asahel G. Bachelder. The bill charged that the Chicago and Northwestern Railway Company, from the 1st of June, 1859, to the time of filing the bill, infringed, and was still infringing, the said patent, of which the complainant had become the owner, and prayed for an injunction and an account of profits received by the defendant from the use of the invention patented.

The defendant answered, setting up prior invention and use by others of the improvement claimed, and denying infringement.

After proofs taken, a decree was rendered for the complainant in February, 1865, and a reference ordered. This decree was afterwards opened, and the defendant was allowed to introduce newly discovered evidence. A decree was again rendered for the complainant in July, 1871, and reference again ordered. The master reported profits received by the defendant, for the period of five years, from June 2, 1859, to June 2, 1864, to the

amount of $63,638.40, being $41,280 for saving in wages of brakemen, and $22,358.40 for saving in car-wheels. A decree was rendered for the whole amount in December, 1873; but on a further rehearing in September, 1875, the item for saving on car-wheels was apparently thrown out, and the decree was reduced to the sum of $47,725. From this decree the present appeal is taken. The counsel for the appellee now concedes that, in the light of our decision in *Mowry* v. *Whitney*, 14 Wall. 620, the principle adopted by the master was not correct, and consents that the decree be further reduced to the sum of $24,768, with interest from the date of the report.

The evidence in the case is very voluminous, especially in reference to the question of priority of invention, and would be well calculated to present questions of much embarrassment and difficulty for our determination, if we felt obliged to pass upon the validity of the patent. But as we are satisfied that the Stevens brake used by the defendant is not an infringement of the plaintiff's patent, we are relieved from that unpleasant and difficult duty, involving the weight of evidence given by witnesses speaking to facts and occurrences long past, and often in direct conflict with each other.

At the time when the complainant alleges that Thompson and Bachelder completed the invention for which the letters-patent on which the suit is brought were granted, namely, in 1846 and 1847, double trucks under railroad cars had come into general use in the country, and it was a desideratum to have a brake, or system of brakes, which could be operated from either end of the car, upon the wheels of both trucks; and a number of inventors were in the field, contriving and testing their various devices. Like almost all other inventions, that of double brakes came when, in the progress of mechanical improvement, it was needed; and being sought by many minds, it is not wonderful that it was developed in different and independent forms, all original, and yet all bearing a somewhat general resemblance to each other. In such cases, if one inventor precedes all the rest, and strikes out something which includes and underlies all that they produce, he acquires a monopoly, and subjects them to tribute. But if the advance towards the thing desired is gradual, and proceeds step by step,

so that no one can claim the complete whole, then each is entitled only to the specific form of device which he produces, and every other inventor is entitled to his own specific form, so long as it differs from those of his competitors, and does not include theirs. These general principles are so obvious, that they need no argument or illustration to support them. We think they are specially applicable to the case before us.

The patent sued on was granted on the sixth day of July, 1852. It was not the first patent granted for double car-brakes. A patent for such a brake had been granted to one Charles B. Turner, on the 14th of November, 1848; another to Nehemiah Hodge, Oct. 2, 1849; and a third to Francis A. Stevens, Nov. 25, 1851; and double-acting brakes had been constructed by other persons before any of these patents were issued. The patent granted to Tanner antedates the other patents referred to, by reason of its being issued upon an application for a patent made by Thompson and Bachelder, on the 29th of June, 1847. It is alleged by the complainant that Thompson and Bachelder completed their invention as early as the fall of 1846, and made a model of it in January, 1847, a copy of which is put in the case. The application filed by them in the Patent Office in June, 1847, is the first authentic evidence, of a public character, of what their invention was. A copy of this application and of the drawings and model by which it was accompanied have been exhibited in evidence, and necessarily constitute an important feature of the case. Being regarded as defective and insufficient by the Patent Office, no patent was granted at the time, and the application lay dormant and without alteration for the space of five years; when, being purchased by Tanner, and being considerably modified and changed, the letters-patent now in question were issued to him as assignee of Thompson and Bachelder. It is obvious that the original exhibit of the invention made by them, and remaining so long in the Patent Office unchanged, should possess great weight as to what their invention really was, and what they claimed it to be.

Of course their object was to connect the brakes of the two trucks together in such a manner as to make them operate together by the application of force at either end of the car. This force they proposed to apply either by hand at the wind-

lass on the platform, or by the bumpers when the train was slowed and the cars came together. The latter seems to have been their favorite plan, and to effect it was one of the principal objects of their improvement.

The system of brakes attached to each truck was not materially changed by them. An upright lever in the centre of the truck was so connected with the brakes on both pair of wheels as to draw them tightly to the wheels when its upper extremity was forced inward towards the centre of the car. To this upper extremity of the lever the external force was applied when the brakes were to be put on. The inner end of the bumper being attached thereto, produced the desired effect when the bumper was pushed in by the adjoining car. The same effect was produced by winding up the windlass by hand, by means of a chain and pulley working from a point inside of the lever, that is, nearer to the centre of the car.

The next point was to communicate this movement of the brakes in one truck to those of the other, by some device that would cause the upper extremity of the lever, in the latter, to be drawn inward, towards the centre of the car, at the same time that the lever on the first truck was forced inward; a simple rod connecting them together would not do this, but it would have the contrary effect. The upper extremities of the two levers must be so connected that, upon the application of force, they would approach each other, each being forced inwardly towards the centre of the car. To effect this, Thompson and Bachelder proposed a device constructed substantially as follows: Under the centre of the car body they attached thereto, by a pivot, a vibrating horizontal lever, situated midway between the trucks, and arranged crosswise of the car. To the outer ends of this lever were attached connecting rods, one of which extended to and connected with the truck lever on one of the trucks; and the other extended to and connected with the truck lever on the other truck. By this arrangement, when one of the truck levers was forced inward, towards the centre of the car, it would push back the connecting rod attached to it, and cause the vibrating lever to revolve on its pivot, and thus draw the other connecting rod towards the centre from the other direction, and force the truck lever on the other truck

inward at the same time. Thus, when the windlass was wound up at either end of the car, it had the effect of operating the brakes on both trucks, by pushing one connecting rod at the same time that it worked the truck lever, and simultaneously pulling the other connecting rod. The bumpers produced the same effect by having gains cut into their sides for receiving the upper arms of the truck levers, and thereby forcing them inward when driven inward themselves. A long iron rod extended the whole length of the car, which was provided with a device for forcing the truck levers out of the gains in the bumpers when it was desired to ease the brakes.

Such, substantially, was Thompson and Bachelder's brake, according to the description thereof deposited and left by them in the Patent Office. In the new application, filed in their name by Tanner in 1852, the bumper arrangement was left out entirely, and, as before stated, considerable modifications were introduced. The connecting rods were attached to the vibrating lever nearer to its pivot, and two additional rods were applied to the outer ends of this lever, extending respectively to the two windlasses at either end of the car, being used for the purpose of working the lever; and the parts were so arranged as to supply the power by drawing or pulling both of the connecting rods, instead of pushing one and pulling the other.

Now, in 1847, when Thompson and Bachelder filed their application for a patent, and in 1846, when it is said they completed their invention, double brakes were already in existence, formed as theirs was (though not in the same manner), by connecting together the movements of the two systems of truck brakes, so that one brakeman, at either end of a car, could apply the brakes to both trucks at the same time.

Without noticing those inventions, the dates of which are disputed, it is sufficient to refer to two instances in point, the existence of which before 1846 cannot be seriously controverted. We refer to those known as the Springfield brake and the Mill-holland brake. These brakes may not have been, and were not, so perfect as that of Thompson and Bachelder, and others constructed at a later period; but they were used, and used successfully; sufficiently so, at least, to have sustained patents for the inventions, had patents been applied for.

The Springfield brake was made by one Harris, in 1842 or 1848, and placed on a long platform-car for carrying freight crates on the Western Railroad of Massachusetts. Each truck was provided with two levers, one to each of the brakes; and these levers were connected together by a rod which caused them both to be operated at the same time by the windlass which was connected by a short chain to the nearest one. A long rod connected one of the levers of the other truck to the same windlass by means of another chain, so that when the windlass was worked it wound up both chains, and operated the brakes on both trucks simultaneously. A like arrangement was connected with the windlass at the other end of the car. Each windlass could thus be made to operate the brakes of both trucks.

This brake was used, as we gather from the evidence, for a year or two, until the car was broken up. It was undoubtedly attended with some inconveniences in its operation, especially in going around sharp curves; but this did not prevent it from being used; and on a straight track, or on a track having only slight curves, it operated very satisfactorily. In 1856 and 1857, when some difficulty arose about the right to use another brake, the employment of this Springfield brake was resumed for more than a year on the passenger cars of the same railroad, with only the slight and obvious modification of attaching the long connecting rod to a lever in each of the trucks, instead of attaching it to the windlass at one end of the car, and to a lever in the truck at the other end.

It is useless to argue that this brake was an imperfect one, or that it worked far less satisfactorily than the Tanner or other brakes. It did work; and under favorable circumstances worked as well as the most improved form of brakes.

The same brake, with only a single windlass, was applied to tenders (which require and admit of only one windlass) as early as 1841, and continued to be thus used to the time of this litigation.

The Millholland brake approached much nearer in its mode of operation to the Tanner brake than did the Springfield. According to the testimony, it was placed on a passenger car of the Baltimore and Susquehanna Railroad in or about the year

1848, and was continued in use for a considerable period, — one witness says, a year or eighteen months. It was taken off because the brakemen were opposed to it, inasmuch as it had to be worked by hand by means of a windlass, whilst they were used to brakes that were operated by the foot. Whilst used, however, it worked with entire success. It is thus described by the inventor, James Millholland, in his testimony. He says: "It broke upon all the eight wheels from either end of the car; the brakes were operated by means of a drum placed under the car, about the centre; there were connections running from this drum to the levers on each truck, and also from the drum to the windlasses of the car." He then describes the manner in which the connecting rods were attached to the truck lever, and their mode of operation. It is apparent from this description that the drum performed almost precisely the same office which is performed by the vibrating lever in the Tanner brake, operating, by means of the connecting rods, upon the brakes in nearly the same manner.

In 1846, Millholland applied a double brake somewhat like the last named to car tenders, using a rock shaft with an arm on it instead of the drum as a means of connecting the brakes to the two trucks. This brake was continued in use for many years.

The subsequent invention of double brakes of improved and better forms superseded these early brakes, it is true; so that, excepting the modified forms in which they were applied to tenders, and excepting the temporary resuscitation of the Springfield brake in 1856, and again in 1871, they went entirely out of use. But their construction and use, though with limited success, are sufficient to show that Thompson and Bachelder were not the pioneers in this field of improvement, and that they were not the originators of the double brake, nor of the use of rods, chains, and similar appliances for connecting the brake systems of two trucks under a car. They invented a particular apparatus for doing the desired work; and they can only claim their particular apparatus, or that which is substantially the same.

This brings us to the question whether the apparatus used by the defendant, and known as the Stevens brake, for which letters-patent No. 8552 were issued to him Nov. 25, 1851, is sub-

stantially the same as Thompson and Bachelder's, or whether it contains in it any thing substantially the same.

Now, the Stevens brake has no vibrating lever between the trucks, as the Tanner brake has, for the purpose of reversing the motion communicated from one truck system to the other and causing the truck levers to move in opposite directions, that is, towards each other when the brakes are put on, and away from each other when the brakes are relieved. This is a marked feature in the Tanner brake, and one on which stress is laid in the original application. The parts particularly pointed out by Thompson and Bachelder as their improvements, exclusive of those connected with the bumpers, are only these three; namely, the vibrating lever, the two rods connected therewith, and their connection with the truck levers. They speak of their improvement as "an improvement upon the car brake now in general use," expressly disclaiming its original invention. This language is somewhat vague; but it sufficiently indicates that they regarded their improvement as consisting in their particular apparatus for effecting the desired result. The claim of the patent as finally issued to Tanner is only for so combining the brakes of the two trucks by means of the vibrating lever, or its equivalent, or mechanism essentially as specified (and no other is specified), as to enable the brakeman operating the windlass at either end of the car to simultaneously apply the brakes of both trucks.

Now, the apparatus for effecting the same purpose in the Stevens brake is essentially different from this. As before stated, it has no central vibrating lever at all, and, as we think, no equivalent of it. It connects the brakes of the two trucks by a single straight rod, extending from the truck lever connected with the outside brake of one truck to the lever connected with the outside brake of the other truck. This outside lever in each truck is connected, by a rod running across and under the axles of the truck, with a similar lever attached to the inner brake of the same truck; and that again is connected with the windlass by another rod running back over the axles of the truck; thus establishing a direct and continuous connection, from one windlass to the other, between all the brakes in both trucks, so that when either windlass is wound up (the

other being held by a ratchet), it winds up and tightens the whole system of brakes on both trucks. In Stevens's arrangement, the separate trucks have two levers, it is true, — one attached to each brake; and it is contended by the complainant's counsel that one of these levers on each truck is equivalent to one-half of the vibrating lever in the Tanner brake. But this supposed equivalency is, in our judgment, too far fetched and imaginary. The levers referred to are no ways different, in form or mode of operation, from ordinary brake levers, and the use of two levers on a truck was not new, having been employed in much the same way in the Springfield brake. They belong to the trucks to which they are respectively attached, having no pivotal or fulcral connection with the body of the car, as Tanner's vibrating lever has. In a word, the construction and mode of operation of the Stevens brake are altogether so different from that of Thompson and Bachelder's, or Tanner's, that, considering the state of the art at the time when the latter was produced, and the necessary limits by which the Tanner patent must be circumscribed, we think that the two are to be regarded as independent inventions; each being limited and confined to the particular contrivance which constitutes its peculiarity.

Having come to this conclusion, it is unnecessary to consider the other questions in the cause.

It will be observed that we have given particular attention to the original application, drawings, and models filed in the Patent Office by Thompson and Bachelder. We have deemed it proper to do this, because, if the amended application and model, filed by Tanner five years later, embodied any material addition to or variance from the original, — any thing new that was not comprised in that, — such addition or variance cannot be sustained on the original application. The law does not permit such enlargements of an original specification, which would interfere with other inventors who have entered the field in the mean time, any more than it does in the case of reissues of patents previously granted. Courts should regard with jealousy and disfavor any attempts to enlarge the scope of an application once filed, or of a patent once granted, the effect of which would be to enable the patentee to appropriate

other inventions made prior to such alteration, or to appropriate that which has, in the mean time, gone into public use.

The decree of the Circuit Court will be reversed, and the cause remanded with directions to enter a decree dismissing the bill of complaint; and it is

So ordered.

GRAY v. BLANCHARD.

A writ of error sued out upon a judgment on a money demand will be dismissed where it affirmatively appears from the record, taken as a whole, that the amount actually in dispute is not sufficient to give this court jurisdiction.

MOTION to dismiss a writ of error to the Circuit Court of the United States for the Western District of Michigan.

Mr. M. J. Smiley, for the defendants in error, in support of the motion.

Mr. J. W. Stone, contra.

The facts are stated in the opinion of the court.

MR. CHIEF JUSTICE WAITE delivered the opinion of the court.

This is a writ of error sued out by the defendant below, when the judgment against him upon a money demand was for only $1,118.71. *Prima facie* this is the measure of our jurisdiction in favor of the present plaintiff in error; but he still thinks we must retain the cause, as the record shows that, having pleaded the general issue, he gave notice of set-off, claiming $10,000. It is true that such notice was given, but it is shown affirmatively by the record that the only dispute upon the trial under the notice was as to a single item, of the amount of $446. In short, the bill of exceptions shows distinctly that the only controversy between the parties was in respect to a claim by the plaintiff below of about $2,000, and by the defendant (plaintiff in error) as to this item of set-off. In his application for the removal of the cause from the State court to the Circuit Court, the plaintiff in error made this statement, to wit: "The matter in dispute exceeds, exclusive

of costs, the sum of $500, and is of the value of $2,000;" and the judge, in his charge to the jury, alluded to the fact that the amount in controversy was not sufficient to entitle the parties to a review in this court.

In *Lee* v. *Watson* (1 Wall. 337), it was held that "in an action upon a money demand, where the general issue is pleaded, the matter in dispute is the debt claimed; and its amount, as stated in the body of the declaration, and not merely the damages alleged, or the prayer for judgment, at its conclusion, must be considered in determining whether this court can take jurisdiction." To the same effect is *Schacker* v. *Hartford Fire Insurance Co.* (93 U. S. 241), where we dismissed a case in which it appeared that the action was upon a policy of insurance for $1,400, because, although damages to our jurisdictional amount were claimed, it was apparent from the whole record that there could not be a recovery for more than the amount of the policy, and a small sum in addition for interest.

The principles upon which those cases rest are decisive of this. While in the absence of any thing to the contrary the prayer for judgment by the plaintiff, in his declaration or complaint, upon a demand for money only, or by the defendant in his counter-claim or set-off, will be taken as indicating the amount in dispute, yet if the actual amount in dispute does otherwise appear in the record, reference may be had to that for the purpose of determining our jurisdiction. Ordinarily this will be found in the pleadings, but we need not necessarily confine ourselves to them. We hear the case upon the record which is sent up, and if, taking the whole record together, it appears that we have no jurisdiction, the case must be dismissed. Here it is affirmatively shown that the value of the "matter in dispute" is less than our jurisdictional amount. The motion to dismiss will therefore be granted, and it is

So ordered.

COOK v. PENNSYLVANIA.

1. A tax laid by a State on the amount of sales of goods made by an auctioneer is a tax on the goods so sold.
2. The statute of Pennsylvania of May 20, 1853, modified by that of April 9 1859, requiring every auctioneer to collect and pay into the State treasury a tax on his sales, is, when applied to imported goods in the original packages, by him sold for the importer, in conflict with sects. 8 and 10 of art. 1 of the Constitution of the United States, and therefore void, as laying a duty on imports and being a regulation of commerce.

ERROR to the Supreme Court of the State of Pennsylvania.

This action, which was brought in the Court of Common Pleas of Dauphin County, Pennsylvania, was tried by the court upon the following case, stated in the nature of a special verdict.

The Commonwealth of Pennsylvania claims from the defendant, Samuel C. Cook, who, by the governor, was duly appointed and commissioned an auctioneer in and for the city of Philadelphia, the sum of $757.83, for taxes due at one-half of one per cent and three-fourths of one per cent, as per his report furnished to the auditor-general, and settlement made by the auditor-general and State treasurer, dated Jan. 8, 1871, upon sales made by him of foreign goods placed in his hands by the importer, in bulk or original packages, to be sold at auction as an auctioneer in the original packages as imported, and which were so sold by him at auction as an auctioneer. The Commonwealth claims the said taxes under the act of assembly entitled "An Act to incorporate the Commercial Mutual Insurance Company of Philadelphia, relative to the State duty on domestic and foreign articles in the counties of Philadelphia and Allegheny," &c., approved the twentieth day of May, 1853, P. L. 1853, 679; and under the act of assembly entitled "An Act to modify the existing laws of the Commonwealth, and to provide more effectually for the collection of the State tax or duty on auction sales in the city of Philadelphia and county of Allegheny," approved April 9, 1859, P. L. 1859, 435.

The defendant claims that said sales of foreign goods are exempt from taxation, because said acts of assembly, so far as they relate to such taxation, are in direct conflict with sects.

8 and 10 of art. 1 of the Constitution of the United States, and for that and other reasons void; and inasmuch as the foreign goods so taxed as aforesaid were sold in bulk, as they were imported by the importer, said defendant, Cook, acted simply as his salesman.

That as the said goods had never been sold for consumption or resale by the importer, and had never been divided by him into smaller quantities by breaking up the casks or packages in which they were originally imported, the said goods had not lost their character as imports, and therefore that any such tax is unconstitutional and ought not to be levied.

That if the court should be of the opinion that the acts of assembly are constitutional, then judgment should be entered for the Commonwealth, but if not, then for the defendant, Cook; costs to follow the judgment, and either party reserving the right to sue out a writ of error.

The court being of the opinion that the defendant was properly charged with the tax, and that the laws under which it was assessed were constitutional, gave judgment in favor of the Commonwealth. That judgment having been affirmed by the Supreme Court of Pennsylvania, Cook sued out this writ of error.

The statutes of Pennsylvania referred to in the case stated are set out in the opinion of the court.

Mr. Benjamin Harris Brewster for the plaintiff in error.

As the goods sold by Cook had not lost their character as imports, the tax imposed was upon them, and is therefore in direct repugnance to the provisions of the Constitution of the United States, which declare that "no State shall, without the consent of Congress, lay any imposts or duties on imports or exports, except what may be absolutely necessary for executing its inspection laws;" and that Congress shall have power "to regulate commerce with foreign nations, and among the several States, and with the Indian tribes." *Brown* v. *State of Maryland*, 12 Wheat. 419; *The License Cases*, 5 How. 504; *Pervear* v. *The Commonwealth*, 5 Wall. 475; *Same* v. *Austin*, 18 id. 29; *Case of the State Freight Tax*, 15 id. 232; *Waring* v. *The Mayor*, 8 id. 110; *People* v. *Waring*, 8 Keyes (N. Y.), 374; *Pennsylvania Railroad* v. *Commonwealth*, 8 Grant (Pa.), 180;

Welton v. *The State of Missouri*, 91 U. S. 275; *Henderson* v. *The Mayor, &c.*, 92 id. 268; *Inman Steamship Co.* v. *Tinker*, 94 id. 238.

Mr. Lyman D. Gilbert, Deputy Attorney-General of Pennsylvania, *contra*.

The contention is between the Commonwealth and an auctioneer, as to a graduated tax upon his sales; a liability to pay which she annexed as a condition to the grant of authority to pursue his calling.

If it be asserted that the tax is laid upon the importer, and is paid by him, the auctioneer being merely the collector, the Commonwealth has the right to collect it from the latter, for he succeeds to no defence which the former might have made. *Waring* v. *The Mayor*, 8 Wall. 110.

The demand is made upon Cook not as an importer, but as an auctioneer, who, as an agent of the Commonwealth, received the tax in dispute, and holds it as her trustee. If he has not collected it, his failure to perform his agreement renders him liable.

Although the tax was not laid directly upon the importer, it is submitted that, if the contrary were true, the right of the Commonwealth to collect it is undoubted; because, first, no one can require the services of her officer, except upon her terms; second, she appointed Cook an auctioneer, investing him with certain privileges and subjecting him to certain responsibilities; and importers who for their own advantage avail themselves of his services, and of the security which she demands of him for his fidelity, cannot decline to pay the prescribed price fixed for his services, and for the benefit which such security affords. As was said by Mr. Chief Justice Marshall, in *Brown* v. *The State of Maryland* (12 Wheat. 437), "Auctioneers are persons licensed by the State, and if the importer chooses to employ them, he can as little object to paying for the service, as for any other for which he may apply to an officer of the State. The right of sale may very well be annexed to importation, without annexing to it also the privilege of using the officers licensed by the State to make sales in a particular way."

Whatever privileges, therefore, importers obtain not from

the United States, but exclusively from the Commonwealth, — among them being that of employing a licensed auctioneer, — are subject to her regulation, and to such taxation as she imposes. An increased price of foreign merchandise may result from the tax in question; but such a consequence follows many modes of taxation, and furnishes no reason against their validity. *Nathan* v. *Louisiana*, 8 How. 78; *State Tax on Railway Gross Receipts*, 15 Wall. 284.

The Commonwealth having the right to impose the tax in question, can determine the amount thereof and the manner in which it shall be laid. *State Tax on Railway Gross Receipts, supra; Society for Savings* v. *Coite*, 6 Wall. 594; *Provident Institution* v. *Massachusetts*, id. 611; *The Delaware Railroad Tax*, 18 id. 206.

MR. JUSTICE MILLER delivered the opinion of the court.

The act of the legislature of Pennsylvania, of May 20, 1853 (Pamphlet Laws, 683), declares that —

"The State duty to be paid on sales by auction in the counties of Philadelphia and Allegheny shall be on all domestic articles and groceries, one-half of one per cent; on foreign drugs, glass, earthenware, hides, marble-work, and dye-woods, three-quarters of one per cent."

By the sixth section of the act of April 9, 1859, the law was modified, as follows: —

"Said auctioneers shall pay into the treasury of the Commonwealth a tax or duty of one-fourth of one per cent on all sales of loans or stocks, and shall also pay into the treasury aforesaid a tax or duty, as required by existing laws, on all other sales to be made as aforesaid, except on groceries, goods, wares, and merchandise of American growth or manufacture, real estate, shipping, or live-stock; and it shall be the duty of the auctioneer having charge of such sales to collect and pay over to the State treasurer the said duty or tax, and give a true and correct account of the same quarterly, under oath or affirmation, in the form now required by law." Pamphlet Laws, 436.

The effect of this legislation is, that by the first statute a discrimination of one-fourth of one per cent is made against

foreign goods sold at auction; and by the last statute, while all sales of foreign or imported goods are taxed, those arising from groceries, goods, wares, and merchandise of American growth or manufacture are exempt from such tax.

It appears that the law also required these auctioneers to take out a license, to make report of such sales, and to pay into the treasury the taxes on these sales.

The defendant refused to pay the tax for which he was liable under this law, for the sale of goods which had been imported and which he had sold for the importers in the original packages. In the suit, in which judgment was rendered against him in the Supreme Court of Pennsylvania, he defended himself on the ground that these statutes were void, because forbidden by sects. 8 and 10 of art. 1 of the Constitution of the United States.

The clauses referred to are those which give to Congress power to regulate commerce with foreign nations, and forbid a State, without the consent of Congress, to levy any imposts or duties on imports. The case stated shows that the goods sold by defendant were imported goods, and that they were sold by him in the packages in which they were originally imported. It is conceded by the Attorney-General of the State, that if the statute we have recited is a tax on these imports, it is justly obnoxious to the objection taken to it.

But it is argued that the authority of the auctioneer to make any sales is derived from the State, and that the State can, therefore, impose upon him a tax for the privilege conferred, and that the mode adopted by the statute of measuring that tax is within the power of the State. That being a tax on him for the right or privilege to sell at auction, it is not a tax on the article sold, but the amount of the sales made by him is made the measure of the tax on that privilege. In support of this view, it is said that the importer could himself have made sale of his goods without subjecting the sale to the tax. The argument is fallacious, because without an auctioneer's license he could not have sold at auction even his own goods. If he had procured, or could have procured, a license, he would then have been subject by the statute to the tax, for it makes no exception. By the express language of the statute, the auc-

tioneer is to collect this tax and pay it into the treasury. From whom is he to collect it if not from the owner of the goods? If the tax was intended to be levied on the auctioneer, he would not have been required first to collect it and then pay it over. It was, then, a tax on the privilege of selling foreign goods at auction, for such goods could only be sold at auction by paying the tax on the amount of the sales.

The question as thus stated has long ago and frequently been decided by this court.

In *Passenger Cases* (7 How. 288), a statute of New York was the subject of consideration, which required an officer of the city of New York, called the health commissioner, to collect from the master of every vessel from a foreign port, for himself and each cabin passenger on board his vessel, one dollar and fifty cents, and for each steerage passenger, mate, sailor, or mariner, one dollar. A statute of the State of Massachusetts was also considered, which enacted that no alien passengers (other than certain diseased persons and paupers, provided for in a previous section) should be permittted to land until the master, owner, consignee, or agent of such vessel should pay to the regularly appointed boarding officers the sum of two dollars for each passenger so landing. In both instances, although the master or the owner of the vessel was made to pay the sum demanded, it was held to be a tax on the passengers. It was he whose loss it was when paid, and the burden rested ultimately and solely on him. Mr. Chief Justice Taney says: "It is demanded of the captain, and not from every separate passenger, for the convenience of collection. But the burden evidently falls on the passenger, and he, in fact, pays it, either in the enhanced price of his passage, or directly to the captain, before he is allowed to embark for the voyage." Because it was such a tax, the majority of the court held it to be unconstitutional and void.

In the case of *Crandall* v. *State of Nevada* (6 Wall. 35), the State had passed a law requiring those in charge of all the stage-coaches and railroads doing business in the State to make report of every passenger who passed through the State or went out of it by their conveyances, and to pay a tax of one dollar for every such passenger. The argument was urged

there, that the tax was laid on the business of the railroad and stage-coach companies, and the sum of one dollar exacted for each passenger was only a mode of measuring the business to be taxed. But the court said, as in *Passenger Cases*, that it was a tax which must fall on the passenger, and be paid by him for the privilege of riding through the State by the usual vehicles of travel.

In *Case of the State Freight Tax* (15 id. 232), MR. JUSTICE STRONG says: "The case presents the question whether the statute in question — so far as it imposes a tax upon freight taken up within the State and carried out of it, or taken up outside the State and delivered within it, or, in different words, upon all freight other than that taken up and delivered within the State — is not repugnant to the provision of the Constitution of the United States." It was argued here again that the tax was one on the business and franchises of the railroad companies which were required to pay it; but the court, reviewing the authorities, said that the inquiry was upon what did the burden really rest, and not upon the question from whom the State exacted payment into its treasury. This language was abundantly supported by the cases concerning tax on the national banks; namely, *Bank of Commerce* v. *New York City*, 2 Black, 620; *Bank Tax Cases*, 2 Wall. 200; *Society for Savings* v. *Coite*, 6 id. 594; *Provident Institution* v. *Massachusetts*, id. 611.

In *Henderson* v. *The Mayor* (92 U. S. 259), where the owners of vessels from a foreign port were required to give a bond, as security, that every passenger whom they landed should not become a burden on the State, or pay for every such passenger a fixed sum, it was held to be in effect a tax of that sum on the passenger, however disguised by the alternative of a bond which would never be given. The court said, that "in whatever language a statute may be framed, its purpose must be determined by its natural and reasonable effect; and if it is apparent that the object of this statute, as judged by that criterion, is to compel the owners of vessels to pay a sum of money for every passenger brought by them from a foreign shore and landed at the port of New York, it is as much a tax on passengers, if collected from them, or a tax on

the vessel or owner for the exercise of the right of landing their passengers in that city, as was the statute held void in the *Passenger Cases*."

To the same effect, and probably more directly in point, is the case of *Welton* v. *State of Missouri* (91 id. 275), decided at the same term. In that case, pedlers were required, under a severe penalty, to take out a license; and those only were held to be pedlers who dealt in goods, wares, and merchandise which were not of the growth, produce, or manufacture of the State. The court, after referring to the case of *Brown* v. *Maryland*, relied on by defendant here, adds: "So, in like manner, the license tax exacted by the State of Missouri from dealers in goods which are not the product or manufacture of the State, before they can be sold from place to place within the State, must be regarded as a tax upon such goods themselves; and the question presented is, whether legislation, thus discriminating against the products of other States in the conditions of their sale by a certain class of dealers, is valid under the Constitution of the United States." And it was decided that it was not. See also *Waring* v. *The Mayor*, 8 Wall. 110.

The tax on sales made by an auctioneer is a tax on the goods sold, within the terms of this last decision, and, indeed, within all the cases cited; and when applied to foreign goods sold in the original packages of the importer, before they have become incorporated into the general property of the country, the law imposing such tax is void as laying a duty on imports.

In *Woodruff* v. *Parham* (8 Wall. 123) and *Hinson* v. *Lott* (id. 148), it was held that a tax laid by a law of the State in such a manner as to discriminate unfavorably against goods which were the product or manufacture of another State, was a regulation of commerce between the States, forbidden by the Constitution of the United States. The doctrine is reasserted in the case of *Welton* v. *State of Missouri*, *supra*. The Congress of the United States is granted the power to regulate commerce with foreign nations in precisely the same language as it is that among the States. If a tax assessed by a State injuriously discriminating against the products of a State of the Union is forbidden by the Constitution, a similar tax against goods imported from a foreign State is equally forbidden.

A careful reader of the history of the times which immediately preceded the assembling of the convention that framed the American Constitution cannot fail to discover that the need of some equitable and just regulation of commerce was among the most influential causes which led to its meeting. States having fine harbors imposed unlimited tax on all goods reaching the Continent through their ports. The ports of Boston and New York were far behind Newport, in the State of Rhode Island, in the value of their imports; and that small State was paying all the expenses of her government by the duties levied on the goods landed at her principal port. And so reluctant was she to give up this advantage, that she refused for nearly three years after the other twelve original States had ratified the Constitution, to give it her assent.

In granting to Congress the right to regulate commerce with foreign nations, and among the several States, and with the Indian tribes, and in forbidding the States without the consent of that body to levy any tax on imports, the framers of the Constitution believed that they had sufficiently guarded against the dangers of any taxation by the States which would interfere with the freest interchange of commodities among the people of the different States, and by the people of the States with citizens and subjects of foreign governments.

The numerous cases in which this court has been called on to declare void statutes of the States which in various ways have sought to violate this salutary restriction, show the necessity and value of the constitutional provision. If certain States could exercise the unlimited power of taxing all the merchandise which passes from the port of New York through those States to the consumers in the great West, or could tax — as has been done until recently — every person who sought the seaboard through the railroads within their jurisdiction, the Constitution would have failed to effect one of the most important purposes for which it was adopted.

A striking instance of the evil and its cure is to be seen in the recent history of the States now composing the German Empire. A few years ago they were independent States, which, though lying contiguous, speaking a common language, and belonging to a common race, were yet without a common government.

The number and variety of their systems of taxation and lines of territorial division necessitating customs officials at every step the traveller took or merchandise was transported, became so intolerable, that a commercial, though not a political union was organized, called the German Zollverein. The great value of this became so apparent, and the community of interest so strongly felt in regard to commerce and traffic, that the first appropriate occasion was used by these numerous principalities to organize the common political government now known as the German Empire.

While there is, perhaps, no special obligation on this court to defend the wisdom of the Constitution of the United States, there is the duty to ascertain the purpose of its provisions, and to give them full effect when called on by a proper case to do so.

The judgment of the Supreme Court of Pennsylvania will be reversed, and the case remanded for further proceedings, in conformity with this opinion; and it is

So ordered.

HOSMER v. WALLACE.

1. Pending a proceeding in a tribunal of the United States, for the confirmation of a claim to lands in California, under a Mexican grant, no portion of them embraced within the boundaries designated in the grant is open to settlement, under the pre-emption laws, although, upon the final survey of the claim when confirmed, there may be a surplus within those boundaries.
2. Until a segregation of the quantity granted is made by an approved official survey, third parties cannot interfere with the grantee's possession of the lands, and limit it to any particular place within those boundaries.
3. Between March 1, 1856, and May 30, 1862, unsurveyed public lands in California were not subject to settlement under the pre-emption laws. Since the latter date, they, as well as surveyed lands, have been so subject.
4. The right of pre-emption only inures in favor of a claimant when he has performed the conditions of actual settlement, inhabitation, and improvement. As he cannot perform them when the land is occupied by another, his right of pre-emption does not extend to it.
5. The object of the seventh section of the act of July 23, 1866 (14 Stat. 218), "to quiet land-titles in California," was to withdraw from the general operation of the pre-emption laws lands continuously possessed and improved

by a purchaser under a Mexican grant, which was subsequently rejected, or limited to a less quantity than that embraced in the boundaries designated, and to give to him, to the exclusion of all other claimants, the right to obtain the title.

6. A "*bona fide* pre-emption claimant" is one who has settled upon lands subject to pre-emption, with the intention to acquire them, and who, in order to perfect his right to them, has complied, or is proceeding to comply, in good faith with the requirements of the pre-emption laws.

ERROR to the Supreme Court of California.

This was a suit to charge the defendant, as trustee of certain land in California, and to compel him to transfer the title to the plaintiff. The District Court of the State, in which it was brought, rendered judgment for the defendant. The Supreme Court of the State affirmed it, and the plaintiff has brought the case here. The facts are sufficiently stated in the opinion.

Mr. S. F. Leib for the plaintiff in error.
Mr. George A. Nourse, contra.

MR. JUSTICE FIELD delivered the opinion of the court.

The defendant has a patent of the United States for certain land in the county of Santa Clara, in the State of California. The plaintiff claims that he has an equitable right to the land by virtue of his settlement thereon, and subsequent proceedings under the pre-emption laws; and therefore seeks to charge the defendant as trustee of the title for his benefit, and to compel its transfer to him.

It appears from the record that the premises are within the boundaries of a grant made by the former government of Mexico to one Estrada. The grants of that government in California were sometimes of tracts with defined boundaries, and sometimes of places by name where the boundaries were known and could be readily identified; but more frequently they were of a specified quantity of land within boundaries embracing a larger amount, to be measured off and segregated by magistrates of the vicinage. A grant of the latter class was usually in form of the entire tract within the boundaries mentioned, with a condition limiting its extent to the quantity specified, the surplus after the measurement being reserved for the use of the nation. The grantee could not measure off the quantity thus

specified so as to bind the government. This could be done only by its officers, pursuant to regulations established for that purpose. Until the segregation was thus made, no third person could interfere with the grantee's possession, and attempt to limit it to any particular place within the boundaries designated.

Soon after the acquisition of California, Congress provided by law for an examination of the various grants of land made by the former government, the confirmation of such as were found to be valid and entitled to recognition, the survey and measurement of the tracts or quantities granted, and the issue of patents to the confirmees. And in order that these proceedings might not be defeated, and that the rights of the grantees in the mean time should not be impaired or embarrassed by the settlement of others, upon pretence that the grants were invalid, or that there was a surplus within their boundaries over the quantity granted, which could be appropriated, the lands claimed under these grants were excepted from the operation of the pre-emption laws, when they were extended over the State.

In the investigations thus authorized, many grants supposed to be valid were rejected; and in numerous instances land purchased from the grantees and improved was excluded by the surveys from the tracts confirmed. To meet the hardships thus arising, and to enable purchasers in good faith and for value to hold the tracts improved by them, Congress, in an act passed on the 28d of July, 1866, to quiet the title to lands in California, provided as follows: —

"That where persons in good faith and for a valuable consideration have purchased land of Mexican grantees or assigns, which grants have subsequently been rejected, or where the lands so purchased have been excluded from the final survey of any Mexican grant, and have used, improved, and continued in the actual possession of the same according to the lines of their original purchase, and where no valid adverse right or title (except of the United States) exists, such purchasers may purchase the same, after having such lands surveyed under existing laws, at the minimum price established by law, upon first making proofs of the facts as required in this section, under regulations to be provided by the Commissioner of the General Land-Office." 14 Stat. 220, sect. 7.

In the present case, it appears that prior to February, 1862, Estrada, the original grantee of the Mexican government, sold to one Lyons his right to a portion of the land within the boundaries mentioned in his grant, embracing the premises in controversy; that previously, in October, 1856, the plaintiff had settled upon these premises, and erected a house thereon, claiming that he made the settlement under the pre-emption laws of the United States; that, in February, 1862, he was evicted from them by the sheriff of the county under a judgment in ejectment recovered by Lyons; and that thereupon he removed his house and improvements to adjacent land. After this eviction, the defendant purchased from Lyons his right under the grant to the premises, and has ever since been in their actual possession and use. The grant had been previously confirmed, but for a less quantity than that contained within the boundaries mentioned; and upon the final survey, which was approved in June, 1865, after the defendant's purchase, these premises were excluded. The public surveys were subsequently extended over the land, and in July, 1866, the plaintiff filed a declaratory statement in the proper land-office, claiming to pre-empt the premises together with other land, alleging his settlement thereon in October, 1856, and in September following made proof of his claim before the register and receiver, and was allowed to enter the land. He then paid the purchase-money and obtained a certificate of payment. In the mean time, the act of July 23, 1866, was passed, and under it the defendant claimed the right to purchase the premises. The Commissioner of the General Land-Office thereupon directed the register and receiver at San Francisco to investigate the entry of the plaintiff, and to take such testimony as might be offered by him and the defendant concerning their respective claims, and to report the same to him, together with their decision. Both parties appeared before these officers and supported their respective claims. The decision of the officers was in favor of the plaintiff; the defendant appealed to the commissioner, by whom the decision was reversed, and the land awarded to him. On further appeal to the Secretary of the Interior, the decision of the commissioner was affirmed; and, upon payment of the purchase-money, a patent was issued to the defendant.

The decision of the Commissioner and of the Secretary was clearly correct. The plaintiff had acquired by his settlement in 1856 no such interest in the premises as could control the disposition of them by the United States, should it be ultimately determined that they were not covered by the grant. The land within the boundaries of the grant was not open to settlement under the pre-emption laws; and his occupation from 1856 to his eviction in 1862 was that of a trespasser, and did not originate any rights which the government was bound to respect. The land was not then "public land," in the sense of those laws; and even if it had been public land, to which no private claim was made, it would not have been subject to settlement under them until it had been surveyed. The act of Congress of March 8, 1853, allowing a settlement on unsurveyed lands in California, was limited in its operation to one year. 10 Stat. 246, proviso to sect. 6. By the act of March 1, 1854, this privilege was extended for two years from that date, when it expired. Id. 268. No other statute was passed opening unsurveyed lands in California to pre-emption settlement until May 30, 1862. 12 id. 409. The occupation, therefore, of the plaintiff in October, 1856, was a mere intrusion upon the claim of another, without any license of the government; and after he was evicted by legal process in February, 1862, the premises were in the possession of the defendant, and therefore not open to settlement by him. Whatever right of pre-emption the plaintiff acquired by his settlement to land outside of the boundaries of the Mexican grant originated after May 30, 1862; but as to land within those boundaries, no right could be initiated until the land was excluded from the tract confirmed by the approved survey in June, 1865. In neither case could the right of pre-emption extend to land in the occupation of the defendant at those dates. To create a right of pre-emption there must be settlement, inhabitation, and improvement by the pre-emptor, conditions which cannot be met when the land is in the occupation of another. Settlement, inhabitation, and improvement of one piece of land can confer no rights to another adjacent to it, which at the commencement of the settlement is in the possession and use of others, though upon a subsequent survey by the government it prove to be

part of the same sectional subdivision. Under the pre-emption laws, as held in *Atherton* v. *Fowler* (96 U. S. 513), the right to make a settlement is to be exercised on unsettled land; the right to make improvements is to be exercised on unimproved land; and the right to erect a dwelling-house is to be exercised on vacant land: none of these things can be done on land when it is occupied and used by others.

There was, therefore, no valid adverse right or title, except that of the United States, to the premises in controversy when they were excluded by the approved survey from the tract confirmed; nor had the plaintiff the right of a pre-emption claimant to them. No just ground, consequently, existed for refusing to the defendant the privilege of purchasing them under the act of 1866. It is found by the court that he bought the land, in good faith and for a valuable consideration, from the assignee of the Mexican grantee before the survey of the grant; and that it has since been in his actual possession and use, according to the lines of his original purchase. And besides, the use, occupation, and improvement of the land, required by that act, being matters for the determination of the officers of the Land Department, it must be presumed from their decision that they were sufficiently established.

The contention of the plaintiff, if we understand it, is that the proviso in the eighth section of the act of 1866 changed the doctrine stated, and gave him a right of pre-emption to land excluded by the survey from the tract confirmed, although it was at the time in the occupation of the defendant. The proviso is, that nothing in the act "shall be construed so as in any manner to interfere with the right of *bona fide* pre-emption claimants;" and it is argued that some operation must have been intended to be given it, and that it can have none against a purchase by the claimant under the grant title, unless a pre-emption right could be acquired to the land whilst in his possession. Conceding this to be correct, we do not perceive that the conclusion follows for which the plaintiff contends. If the proviso can have no operation against a purchase by a claimant under the grant title, it is for the obvious reason that the conditions upon which the claimant can make a purchase are incompatible with those upon which a pre-emption right can

arise. The inference is, that the proviso must be applied to other land which the act mentions. The object of the act was to withdraw land continuously possessed and improved by a purchaser under a Mexican grant from the general operation of the pre-emption laws, and to give to him, to the exclusion of all other claimants, the right to obtain the title. That it was competent for Congress to deal with the land as it chose does not admit of question. No vested rights in the land could be acquired by any one until it was open to settlement; nor afterwards, unless the pre-emptor made his entry and obtained a patent certificate before the passage of the act. *Frisbie* v. *Whitney*, 9 Wall. 187; *The Yosemite Valley Case*, 15 id. 77.

The term *bona fide*, as applied to the pre-emption claimant, does not change the qualifications of such claimant, nor the conditions upon which, under the general law, a settlement with a view to pre-emption is permitted. It was intended to designate one who had settled upon land subject to pre-emption, with the intention to acquire its title, and had complied, or was proceeding to comply, in good faith, with the requirements of the law to perfect his right to it. The plaintiff does not come within this class.

Judgment affirmed.

NEWCOMB v. WOOD.

1. The power, with the consent of the parties, to appoint referees, and refer to them a pending cause, is incident to all judicial administration, where the right exists to ascertain the facts as well as to pronounce the law.
2. Any issues in an action, whether they be of fact or of law, may be so referred by sect. 281 of the Code of Ohio.
3. A party who goes to trial before referees, without requiring an oath to be administered to them, waives any objection to the omission of such oath.
4. The fact that an award was signed by only two of three referees was not called to the attention of the court when their report was confirmed and judgment rendered thereon. *Held*, that it furnishes no ground for reversing the judgment.
5. The fifth section of the act of Congress of June 1, 1872 (17 Stat. 197), was not intended to abrogate the established law of the courts of the United States, that to grant or refuse a new trial rests in the sound discretion of the court to which the motion is addressed, and that the result cannot be made the subject of review by writ of error.

ERROR to the Circuit Court of the United States for the Northern District of Ohio.

Nov. 1, 1872, John Wood, assignee in bankruptcy of Philip E. Robertson, filed his petition in the District Court of the United States for the Northern District of Ohio, against Stephen L. Newcomb, to recover the value of certain goods sold to the defendant by Robertson, May 6, 1872, within four months before the latter filed his petition in bankruptcy. An issue of fact having been made by the pleadings, the case was, Nov. 18, 1873, by consent of the parties, referred by the court to Henry C. Hedges, Joseph C. Devin, and A. K. Dunn, as referees, with power to hear and determine all questions of law and fact, and report thereon to the court. Neither of the referees was sworn or affirmed, although the customary oath or affirmation was not expressly waived or insisted upon. Both parties were represented by counsel. Jan. 10, 1874, a report signed by Devin and Hedges was duly filed, awarding the plaintiff $6,356 and costs. Newcomb filed exceptions to the report, on the ground that the referees were not sworn or affirmed well and faithfully to hear and examine the cause, and to make a just and true report therein, according to the best of their understanding, as is required by law. The exceptions were overruled, and the report was confirmed by the court. A new trial having been refused, a judgment was rendered against him, which was affirmed by the Circuit Court. He then sued out this writ, and assigns the following errors: —

That the District Court erred, —

1. In appointing referees in said cause.

2. In overruling the exceptions to their report.

3. In rendering judgment upon said report, it having only been signed by two of the persons named as referees, none of whom were sworn.

4. In refusing to grant a second trial of said action.

Mr. Jeremiah M. Wilson for the plaintiff in error.

Mr. Walter H. Smith, contra.

MR. JUSTICE SWAYNE delivered the opinion of the court.

A few remarks will be sufficient to dispose of the several assignments of error in this case.

The power of a court of justice, with the consent of the parties, to appoint arbitrators and refer a case pending before it, is incident to all judicial administration, where the right exists to ascertain the facts as well as to pronounce the law. *Conventio facit legem.* In such an agreement there is nothing contrary to law or public policy. The Code of Ohio provides (sect. 281) expressly "that all or any of the issues in the action, whether of fact or law, may be referred upon the written consent of the parties, or upon their oral consent in court, entered upon the journal." 2 Swan & C. 1027. The reference here in question was made in the latter mode and by virtue of this authority.

The objection that the arbitrators were not sworn was waived by the plaintiff in error by appearing and going to trial without requiring an oath to be administered. If the witnesses had not been sworn, the waiver of that defect under the same circumstances would have been equally conclusive. Edwards, Referees, 107; Morse, Arbitration and Award, 172; *Maynard* v. *Frederick*, 7 Cush. (Mass.) 247.

Two of the three referees only signed the award, but the attention of the court was not called to the fact when the report was confirmed and the judgment was entered. The omission was amendable, and *non constat* but that the amendment could and would have been made if the objection had been suggested. It would be fair neither to the court nor the other party to permit the objection to be raised here for the first time. Under the circumstances, it must be held to have been conclusively waived, and the plaintiff in error cannot be heard now to insist upon it. *Bell* v. *Bruen*, 1 How. 169; *Marine Bank* v. *Fulton Bank*, 2 Wall. 252; *Klein* v. *Russell*, 19 id. 433; *Edwards* v. *Elliott*, 21 id. 582; *Walker* v. *Sauvinet*, 92 U. S. 90; *Wheeler* v. *Sedgwick*, 94 id. 1.

The plaintiff in error was not, by reason of the State law, entitled to a second trial. The agreement to submit the controversy to referees selected or approved by the parties implied clearly that they intended the award should be final and conclusive. The District Court held this view, and ruled accordingly. It has long been the established law in the courts of the United States that to grant or refuse a new trial rests in

the sound discretion of the court to which the motion is addressed, and that the result cannot be made the subject of review upon a writ of error. We cannot think that Congress intended by the act of June 1, 1872 (17 Stat. 197, sect. 5), to abrogate this salutary rule. *Nudd* v. *Burrows*, 91 U. S. 426; *Indianapolis, &c. Railroad Co.* v. *Horst*, 93 id. 291.

Judgment affirmed.

GAUSSEN v. UNITED STATES.

1. The United States, in asserting its rights, is not barred by the laches of its officers or agents.
2. Duties imposed upon an officer, different in their nature from those which he was required to perform at the time his official bond was executed, do not render it void as an undertaking for the faithful performance of those which he at first assumed. It will still remain a binding obligation for what it was originally given to secure.
3. The twenty-first section of the act of Congress of March 2, 1799 (1 Stat. 644), makes it the duty of collectors of customs "to pay to the order of the officer, who shall be authorized to direct the payment thereof, the whole of the moneys which they may respectively receive" by virtue of that act. *Held*, that payments and disbursements of moneys received in his official capacity, if made by direction of the Secretary of the Treasury, are within the range of the duty of a collector of customs.

ERROR to the Circuit Court of the United States for the District of Louisiana.

This is an action by the United States against Bessie Elgee Gaussen, executrix of John K. Elgee, deceased, who was one of the sureties on the official bond of Thomas Barrett, collector of the customs for the district of New Orleans, in the State of Louisiana. It was before this court at its October Term, 1878, when the judgment of the Circuit Court was reversed and the case remanded for a new trial. *United States* v. *Gaussen*, 19 Wall. 198. The mandate was filed in the court below, Jan. 27, 1875. The bond sued on bears date July 6, 1844, and is conditioned as follows: "Now, therefore, if the said Thomas Barrett has truly and faithfully executed and discharged, and shall continue truly and faithfully to execute and discharge, all the duties of the said office, according to law, then the above obliga-

tion to be void and of none effect; otherwise, it shall abide and remain in full force and virtue."

The United States claimed that the various adjustments of Barrett's accounts by the accounting officers of the Treasury, from July 25, 1844, to Oct. 12, 1845, showed a balance due by him of $41,376.64, and that his failure to account for and pay over that amount, received by him in his official capacity, constituted a breach of the condition of his bond. The defendant answered, —

1. By a general denial.

2. ["That if the bond sued on was ever executed, delivered, and took effect, which is not admitted, then defendant avers that said bond, after its execution, was rendered void and null, so far as said decedent was concerned, for this, that subsequent to its date and during the period of the term of office of Thomas Barrett, as collector of the port of New Orleans, the United States imposed on and exacted of him the performance of duties and the assumption of responsibilities in regard to the receipt, custody, and disbursement of the moneys received in his said capacity as collector aforesaid, different and variant from those duties and responsibilities in that regard legally incumbent upon him as collector aforesaid, at the date of said bond, under the law then existing and in force; that during his said term of office said Barrett was dispensed by the United States from his duty and obligation of paying certain moneys, received by him in his said capacity, to the United States, in the mode required by law, and in lieu thereof was required by the United States to expend and disburse, and under its orders he did actually expend and disburse, during his said official term, a large portion of said moneys, by payments made to collectors and surveyors of other collection districts, and to various other officers of the government; that said Barrett was required by the United States to expend and disburse, and he did, in accordance with its orders, expend and disburse, during his said official term, a large portion of said moneys for the construction of the new marine hospital, and for the maintenance and supply of existing hospitals and light-houses, and of vessels of the revenue and naval service, and for other purposes entirely beyond the scope of his duties as collector aforesaid, and as fixed and defined by law;

that said Barrett was required by the United States, in his said capacity as collector aforesaid, to receive and disburse, and did actually during his said official term receive and disburse, under its said requirements, large sums of money which he was not required by law to receive and disburse in his said capacity as collector; — all of which appears by the account filed by the plaintiff herein. And defendant charges that the duties and risks and responsibilities of said Barrett as collector aforesaid, without the consent of said decedent, were varied, enlarged, and changed by the United States, subsequent to the date of said bond and during his official term, whereby the liability of said decedent as surety on said bond, if ever it existed, was avoided and discharged.

3. "That the said Thomas Barrett departed this life about the year 1846, in New Orleans, having a large real and personal estate, consisting in property and assets, more than sufficient to pay the amount of plaintiff's demand; that if the United States had a valid claim against said Barrett, it had the right of priority of payment on such property and assets, which it neglected to enforce, and lost; that upon said bond are signatures which purport to be those of François Delery, Sylvain Peyroux, Lucien Hermann, M. B. Cantrelle; that all of said parties are dead; that each died leaving a large and valuable estate, more than enough to pay the amount claimed in this suit; that if the United States had a valid claim against said Barrett and said François Delery, Sylvain Peyroux, Lucien Hermann, and M. B. Cantrelle, it had the right of priority of payment of said demand out of each and all of said estates, which it neglected to enforce, and lost, whereby the liability of said J. K. Elgee, if it ever existed, was discharged."]

The court, on motion of the United States, ordered that the part of said answer which is included within brackets be struck out, on the ground that, if true, it was insufficient, as pleaded, to bar the action.

The defendant requested the court to give the following instructions in relation to matters which the evidence tended to establish: —

1. "That if the jury find from the evidence that the Secretary of the Treasury required the said Barrett, while collector,

to use the moneys received by him as collector, in the redemption of treasury notes of the United States, that such requirement was an important and material change of the duties, functions, and employment of the said Barrett as collector, as regulated by law, and, whenever made, discharged the sureties on his official bond from all liability for his subsequent official conduct."

2. "That while Barrett, the principal in the bond sued on, held the office of collector, no law imposed on him the duty of making disbursements for any marine hospital or for the light-houses or revenue-cutters, and that such duties and disbursements were extra-official as to the office of collector, and that the sureties on the bond sued on are not responsible for any fault, neglect, or misconduct of the said Barrett in respect to such extra-official disbursements; and if the jury find from the evidence that said Barrett, while he held said office, was employed by the superior officers of the department to make disbursements for the marine hospital, light-houses, and revenue-cutters, and that the said Barrett was furnished money directly from the treasury of the United States, or from other sources than the proper receipts and collections of the office of collector, that, in order to charge the defendant with the money thus furnished, or any part thereof, it is incumbent on the plaintiff to prove that the money thus furnished, or such part thereof, was necessary to cover the disbursements proper to the office of collector, or was furnished for that purpose."

3. "That if the jury find from the evidence that the Secretary of the Treasury caused to be remitted to Thomas Barrett, while collector, money out of the treasury of the United States, and employed him as disbursing officer of the government in defraying the expenses of the light-house service, of the erection of the marine hospital at New Orleans, and in other matters not connected with his official duties as collector, as regulated by law, and extra-official as respects the office of collector, and in the accounts between the government and the said Barrett, filed with the petition, there are mixed and blended together on the debit side of the account against said Barrett the moneys received by him officially for duties on imports and from other sources from which he was by law

authorized to collect, and moneys remitted to him directly out of the treasury of the United States; [that, in order to recover the balance brought down in the present action, it is incumbent on the government to prove to the satisfaction of the jury that the said balance brought down resulted from the failure of the said Barrett to account for the funds which came into his hands, as collector, and within the scope of his official duties in that office, and his failure to perform his duty in respect to such funds, and not from his failure to account for funds received from the treasury for extra-official purposes, and his failure to perform his duty in respect to such funds."]

These instructions the court refused to give, except so much of the last as is embraced within brackets. The defendant excepted.

There was a verdict for the plaintiff for $36,815.86, with interest thereon from Oct. 12, 1845; and judgment having been rendered thereon, the defendant sued out this writ, and here assigns error as follows:—

The court below erred,—

1. In striking out parts of the answer of the defendant.
2. In refusing the defendant's first request.
3. In refusing the defendant's second request.
4. In refusing the defendant's third request.

Mr. William D. Shipman and *Mr. William W. MacFarland* for the plaintiff in error.

The contract of a surety is *strictissimi juris*, and cannot be extended by implication beyond the fair terms of his engagement. *Ludlow* v. *Simonds*, 2 Cai. (N. Y.) Cas. 1; *United States* v. *Tillotson*, 1 Paine, 305; *Miller* v. *Stewart*, 9 Wheat. 680. The fact that the United States is the obligee of the bond does not change the rule applicable to his contract. *United States* v. *Kirkpatrick*, id. 720. Therefore the English doctrine, that prerogative overrides all equities, has no place in American jurisprudence.

Ordinarily, the acts of a private person or a corporation, obligee of a bond conditioned for the faithful performance of a duty, which discharge the surety, will equally discharge him where they are done by the United States under the same circumstances. *United States* v. *Hillegas*, 3 Wash. 70;

United States v. *Kirkpatrick*, *supra*; *United States* v. *Tillotson*, *supra*.

The answer of the defendant below, which was struck out by the court, was competent, under the rules of pleading prevailing in Louisiana. *Lawson et ux.* v. *Ripley*, 17 La. 238; *Frierson* v. *Irwin*, 5 La. Ann. 531; *Waterman* v. *Gibson*, id. 673; *Ralston* v. *Barclay et al.*, 6 Mart. (La.) 649; *Ory* v. *Winter*, 4 Mart. (La.) N. S. 277; *Tracy* v. *Tuyes et al.*, id. 354.

The court should have charged the jury as requested in the defendant's first prayer. If the new duty imposed by the Secretary of the Treasury upon the collector, to apply the moneys received by him in the redemption of treasury notes, had been inserted in the bond without the consent of the surety, the latter would have been discharged from all liability. *Miller* v. *Stewart*, *supra*.

A new and important change was thereby made in the duties of the office not contemplated by the parties to the bond when they executed it.

The refusal to give the instructions set forth in the second request was error. *Dedham Bank* v. *Chickering*, 4 Pick. (Mass.) 314; *Legh* v. *Taylor*, 7 Barn. & Cress. 491; *United States* v. *Powell*, 14 Wall. 493; *United States* v. *Singer*, 15 id. 111; *Converse* v. *United States*, 21 How. 463.

If any part of the third request was proper, the whole was. The learned judge virtually admitted the legal correctness of the propositions embodied in the request, by charging the conclusion which they embrace; but he rejected the premises inseparably connected therewith, which furnished the only subject-matter to which the jury could intelligently apply that conclusion.

The Solicitor-General, contra.

MR. JUSTICE STRONG delivered the opinion of the court.

This suit was founded upon the bond of a collector of customs, the condition of which is that he had truly executed and discharged, and should continue to execute and discharge, all the duties of the office of collector according to law; and the breach assigned was that he had failed to account for and pay over the money received by him in his official capacity as col-

lector. The defendant's testator was a surety in the bond; but that is an immaterial fact in the case, for nothing is plainer than the rule that a surety in a bond is liable to the same extent to which his principal is liable, by force of the bond.

A general denial having been interposed to the plaintiff's petition, the defendant added two special pleas, which, upon motion, the Circuit Court ordered to be stricken out, and this order is now assigned as error. An examination of the pleas stricken out, however, satisfies us that they were plainly impertinent. They aver nothing that constitutes either a total or even a partial defence. The second alleges, in effect, laches on the part of the government, in failing to assert its claim against other sureties in the bond, whereby, it is averred, the liability of defendant's testator, if it ever existed, was discharged. But laches of the officers or agents of the government is confessedly no bar to the assertion of its rights. This is admitted by the plaintiff in error, and it has not been contended in argument, as it could not have been successfully, that delay or neglect in prosecuting its claims against the cosureties of the defendant's testator is any bar to this suit.

The first special plea[1] requires a more minute examination. It was, in effect, that the obligation of the bond had been discharged, not directly, but because the principal obligor had been required to perform, and had performed, duties additional to those which pertained by law to his office when the bond was made. It does not aver that the additional duties changed the character of the office, or increased the responsibility of the collector for the money received by him as collector of customs. How, then, the requisition of duties not inconsistent with accounting for and paying over money received by him as collector of customs can operate to release his bond is quite incomprehensible. If it be conceded, as it may be, that the addition of duties different in their nature from those which belonged to the office when the official bond was given will not impose upon an obligor in the bond, as such, additional responsibilities, it is undoubtedly true that such an addition of new duties does not render void the bond of the officer as a security for the performance of the duties at first assumed. It will still

[1] *Supra*, p. 585.

remain a security for what it was originally given to secure. And it is noticeable that most of the allegations in the plea of extra-official expenditures and disbursements required of the collector (for example, payments to other collectors and surveyors of other collection districts, payments to other government officers, payments for the construction of a new marine hospital, and for the maintenance and supply of existing hospitals and light-houses and vessels of the revenue and naval service), are averments of conduct and requirements which the collector was under legal obligations to observe and obey when the bond in suit was made. The act of Congress of March 2, 1799, c. 2, sect. 21 (1 Stat. 644), made it the duty of collectors to "pay to the order of the officer who shall be authorized to direct the payment thereof, the whole of the moneys which they may respectively receive" by virtue of the act. All payments and disbursements of money received by the collector in his official capacity, if made as charged in the plea, by direction of the government, were, therefore, strictly within the range of his official duty.

The remaining reason given by the plea in support of the averment that the bond had been avoided is, that the collector was, during his official term, required to receive and disburse large sums of money which the law did not require him to receive and disburse as collector, as appeared by the official accounts filed by the plaintiff in the suit. But how that fact, if it was a fact, could operate, even in favor of a surety, to release him from the obligation of the official bond, we find ourselves unable to perceive. Such an effect has not been claimed in the argument for the plaintiff in error. It is doubtless true that neither the surety nor his principal is responsible, by virtue of the bond, for money which the collector received, not as collector, — money which his office did not require him to receive or disburse; but this suit was brought to enforce no such responsibility. The surety may not be liable for a failure of his principal to account for such money; yet if he is not, it does not follow that he is not bound by his bond to respond for his principal's default to account for money received in his official character. Requiring a person who is a collector of customs to receive a sum of money and apply it in discharge of

some liability of the government entirely outside of his ordinary employment, for example, to pay debentures, may impose a new duty upon him, but it leaves his office, as collector, untouched and his accountability in it unimpaired. This is quite consistent with the doctrine which we admit, that if, after an official bond has been signed, the nature of the office be changed by law, the bond ceases to be obligatory. In such a case the office is no longer the same, within the meaning of the bond. *Converse* v. *United States*, 21 How. 463.

It follows from these considerations that neither of the special pleas set up any thing which amounted to a defence to the action. The facts averred exhibited no discharge of the defendant's testator from the obligation of the bond, nor did they tend to show that he was not responsible for the collector's neglect to account for and pay over whatever money he had received as collector. There was no error, therefore, in striking out the pleas as impertinent, and in refusing to receive evidence to support them.

Holding this opinion, we are not called upon to inquire whether the money received and disbursed by the collector, "as appearing by the official accounts filed by the plaintiff in the suit," was all money which it was his duty to receive and disburse as collector. And we are not to be understood as assenting to the claim that some part of it was not. On this subject see *Broome* v. *The United States*, 15 How. 143.

The next assignment of error requiring attention is, that the court refused to charge the jury, if they found from the evidence the Secretary of the Treasury required the collector to use the money received by him in the redemption of treasury notes, that such requirement was an important and material change of the duties, functions, and employment of the collector as required by law, and discharged the sureties in his official bond from all liability for his subsequent official misconduct.

Enough has already been said to show that such a charge should not have been given. By the act of 1799, to which we have referred, it was made the official duty of the collector to pay the public money in his hands to the order, or according to the direction of the officer authorized to direct the payment thereof. Payment of treasury notes, therefore, in pursuance

of the order of the Secretary, was directly in the line of the collector's duty as such an officer.

The same remarks are applicable to the refusal of the court to affirm the second point proposed by the defendant as instruction to the jury. It would have been error had such instruction been given. While it may be true that no law specifically imposed upon the collector the duty of making disbursements for any marine hospital, or for the light-houses or revenue-cutters, it is not true that such duties "were extra-official as to the office of collector," if the payments were ordered by the Secretary of the Treasury; for the collector was bound to pay to his order, as we have seen. Nor could the court have affirmed that money furnished to the collector from the treasury of the United States, or from sources other than the proper receipts and collections, must be shown by the plaintiff to have been necessary to cover the disbursements proper to the office of the collector, or that it was furnished for that purpose. As the law was when the bond was executed, the government was authorized to furnish money to collectors for certain purposes, on their requisition. But apart from this, when the proposition was submitted to the court, the treasury transcript was in evidence. By law it made out a *prima facie* case, and the burden of proof, instead of being upon the plaintiff, was on the defendant to disprove it. Besides, it was proven by the transcript, and by the accounts furnished to the department by the collector, that the money he had received from other sources than collection of customs had all been expended in the payment of debentures, with the sanction of the Treasury Department. To this there was no contradictory evidence. The point proposed by the defendant was, therefore, wholly inapplicable to the case.

The remaining assignment is that the court refused to affirm the third point in the words in which it was proposed. But the court did affirm it in substance, and even more broadly than it was presented. The court charged the jury, "that, in order to recover the balance brought down in the present action, it is incumbent on the government to prove, to the satisfaction of the jury, that the said balance brought down resulted from the failure of the said Barrett (the collector) to

account for the funds which came into his hands as collector, and within the scope of his official duties in that office, and his failure to perform his duty in respect to such funds, and not from his failure to account for funds received from the treasury for the extra-judicial purposes, and his failure to perform his duty in respect to such funds." This was an unqualified direction, not dependent upon what the jury might believe to be proved by the evidence. It was, therefore, more than the defendant asked.

The case requires nothing further. The plaintiff has recovered a judgment for the sum which the principal obligor in the bond admitted to be due from him as collector. The judgment includes nothing except an unpaid balance of duties collected, and we discover no error in the trial.

Judgment affirmed.

FORD v. SURGET.

1. The court reaffirms the doctrine in *Williams* v. *Bruffy* (96 U. S. 176), that an enactment of the Confederate States, enforced as a law of one of the States composing that confederation, is a statute of such State, within the meaning of the act regulating the appellate jurisdiction of this court over the judgments and decrees of the State courts.
2. A., a resident of Adams County, Mississippi, whose cotton was there burnt by B., in May, 1862, brought an action for its value against the latter, who set up as a defence that that State, whereof he was at that date a resident, was then in subjection to and under the control of the "Confederate States;" that an act of their congress, approved March 6, 1862, declared that it was the duty of all military commanders in their service to destroy all cotton whenever, in their judgment, the same should be about to fall into the hands of the United States; that, in obedience to that act, the commander of their forces in Mississippi issued an order, directed to his subordinate officers in that State, to burn all cotton along the Mississippi River likely to fall into the hands of the forces of the United States; that the provost-marshal of that county was charged with executing within it that order; that A.'s cotton was likely to fall into the hands of the United States; that the provost-marshal ordered and required B. to burn it; and that B. did burn it, in obedience to the said act and the orders of that commander and the provost-marshal. *Held*, 1. That the said act, as a measure of legislation, can have no force in any court recognizing the Constitution of the United States as the supreme law of the land. 2. That it did not assume to confer upon

such commanders any greater authority than they, by the laws and usages of war, were entitled to exercise. 3. That the orders, as an act of war, exempted a soldier of the Confederate army who executed them from liability to the owner of the cotton, who, at the time of its destruction, was a voluntary resident within the lines of the insurrection. 4. That the plea should, upon demurrer, be deemed as sufficiently averring the existence of such relations between B. and the Confederate military authorities as entitled him to make the same defence as if he had been such soldier.

ERROR to the Supreme Court of the State of Mississippi.

Ford filed his complaint against Surget in the Circuit Court of Adams County, Mississippi, on the 2d of October, 1866, alleging that he, "at his plantation in said county, on the fifth day of May, in the year 1862, was possessed, as of his own personal property, of two hundred bales of cotton, averaging in weight four hundred pounds per bale, and of the value of $600 per bale; and that he being so possessed, Surget, at the place aforesaid, and upon the day and year aforesaid, did wilfully and utterly, and against the consent and will of the plaintiff, destroy by fire the said two hundred bales of cotton," to the plaintiff's damage in the sum of $120,000.

The defendant pleaded not guilty, and also filed numerous special pleas.

The defence, although presented by the special pleas in different forms, is, in substance, embraced by the following allegations, namely: —

That, at and before the time the alleged trespasses were committed, the people of Mississippi, and of Virginia, North Carolina, South Carolina, Florida, Georgia, Alabama, Louisiana, Arkansas, and Texas, had confederated together for revolt against, and within their territorial limits had entirely subverted, the government of the United States, and in place thereof, and within and for their territory and people, had created a new and separate government, called the Confederate States of America, having executive, legislative, and judicial departments; that on the 6th of March, 1862, and from that date until the time when the alleged trespasses were committed, a war had been, and was then, waged and prosecuted by and between the United States and the Confederate States, and against each other, as belligerent powers and nations; that the Confederate States, for the prosecution of the war and the mainten-

ance of its powers, then and before had maintained in its service, in the State of Mississippi, an army of which General Beauregard was commander, whereby the territory, property, and inhabitants of that State were held in subjection to and under the control of the Confederate States; that on the 6th of March, 1862, and by an act on that day approved and promulgated by the Confederate congress, it was declared to be the duty of all military commanders in the service of the Confederate States to destroy all cotton, tobacco, and other property that might be useful to the forces of the United States, whenever, in their judgment, the same should be about to fall into their hands; that afterwards, on the 2d of May, 1862, General Beauregard, commanding the Confederate forces, in obedience to that act, made and issued a general order, directed to officers under his command in the State of Mississippi and in the service of the Confederate States, to burn all cotton along the Mississippi River likely to fall into the hands of the forces of the United States; that before and at the date last mentioned, and afterwards, until the time the supposed trespasses were committed, Alexander K. Farrar was acting as provost-marshal of the county of Adams, charged with the duty, among others, of executing, within that county, the orders of military commanders in the State of Mississippi in the service of the Confederate States, and in pursuance thereof was commanded by the Confederate military authorities to burn all the cotton along the bank of that river likely to fall into the hands of the forces of the United States; that the cotton in the complaint mentioned was near the bank of the Mississippi within that county, and was, when burned, likely to fall into the hands of the Federal forces: that the defendant was then ordered and required by said Farrar, acting as provost-marshal under the orders aforesaid, to burn certain cotton, including the cotton in controversy; and that afterwards the defendant, in obedience to the act of the Confederate congress, and the orders of said military commanders and provost-marshal, did burn Ford's cotton, which is the supposed trespass complained of.

To each of the special pleas the plaintiff in error demurred, assigning numerous causes of demurrer. The demurrers were

overruled and replications filed. The cause, being at issue, was tried by a jury. Verdict for the defendant. Judgment having been rendered thereon, the plaintiff removed the cause to the Supreme Court of the State. Upon the affirmance of the judgment, he sued out this writ of error.

Mr. R. D. Mussey for the plaintiff in error.

This court has jurisdiction. The pleadings draw in question the validity of a statute, set up by the defendant as a justification for his destruction of the plaintiff's property. Its validity, although assailed, upon the ground that its provisions violated rights, privileges, and immunities claimed by the plaintiff under the Constitution of the United States, was sustained by the decision of the court below.

The statute, so far as this case is concerned, derived all its force from the effect given to it as the law of the land in Mississippi, by her solemnly expressed sanction of the acts of the "Confederate States," of which she was a member. It must, therefore, be regarded as her statute, within the meaning of the provision which confers upon this court jurisdiction to re-examine upon error the judgment or decree of a State court. The defendant's attempted justification rests upon two grounds:—

1. An act of the Confederate congress.

The Confederate States were only the military representative of the rebellion, and were never recognized by the United States as a *de facto* government. Their enactments are, therefore, absolute nullities, and cannot be pleaded as a justification for the wrongful act of Surget. *Hedges* v. *Price et al.*, 2 W. Va. 234; *Caperton* v. *Martin*, 4 id. 38; *Franklin* v. *Vannoy*, 66 N. C. 145; *The Sequestration Cases*, 30 Tex. 688; *Reynolds, Auditor*, v. *Taylor*, 43 Ala. 434; *Keppel's Adm'rs* v. *Petersburg Railroad Co.*, Chase's Decisions, pp. 209, 210; *United States* v. *Morrison*, id. 525; *Evans* v. *City of Richmond*, id. 551; *Texas* v. *White*, 7 Wall. 700; *Horn* v. *Lockhart*, 17 id. 570; *Sprott* v. *United States*, 20 id. 459.

2. Belligerent rights.

The Confederate forces had no rights other than those expressly granted them; and hence it is incumbent on the defendant to aver that the precise belligerent right set up by him as a justification had been granted. Such averment is wanting

in his pleas. No such right as is invoked in the argument was ever granted by the United States to the insurgents, by any proclamation, order, or statute. The courts are concluded in this respect by the action of the political department. They cannot supplement or extend the grant.

This court, in passing upon such rights, has carefully excluded any enlargement of them, and confined itself to the definition of what was actually given. See, for instance, *Coppel* v. *Hall*, 7 Wall. 554.

Conceding that the orders in question were lawfully issued, they can only justify the military man who executed them.

It is not averred that the defendant had any allegiance to the Confederate forces as a volunteer or a conscript, or that there was any *vis major* compelling him to obey the orders.

It is even denied, by high authority, that an act of a Confederate soldier, committed in violation of private rights as well as of public duty, can find a justification in the order of his commanding officer. *Hedges* v. *Price et al.*, 2 W. Va. 234; *Caperton* v. *Martin*, 4 id. 138; *Franklin* v. *Vannoy*, 66 N. C. 145.

But be this as it may, the exemption from individual and personal liability does not extend to a citizen who, not directly connected with the Confederate forces, committed acts of private wrong in aid of the rebellion. *Cochran & Thompson* v. *Tucker*, 8 Cold. (Tenn.) 186; *White* v. *Hart*, 13 Wall. 646, 651; *Sprott* v. *United States*, 20 Wall. 459, 465.

Mr. W. T. Martin for the defendant in error.

A preliminary question of jurisdiction arises. To give jurisdiction here, it must affirmatively appear from the record not only that a Federal question was raised, but that it was actually decided, or that the judgment as rendered by the State court could not have been given without deciding it. *Brown* v. *Atwell*, 92 U. S. 327; *Armstrong et al.* v. *Treasurer of Athens County*, 16 Pet. 281; *Bridge Proprietors* v. *Hoboken Company*, 1 Wall. 116; *Murdoch* v. *City of Memphis*, 20 id. 590; *Railroad Company* v. *Maryland*, id. 643; *Cockroft* v. *Vose*, 14 id. 5.

If the judgment might have proceeded upon some ground of general law, independently of the Federal question, the juris-

diction fails. *Klinger* v. *Missouri*, 13 Wall. 257; *Commercial Bank* v. *Rochester*, 15 id. 689; *Rector* v. *Ashly*, 6 id. 142; *Gibson* v. *Choteau*, 8 id. 317; *Steines* v. *Franklin County*, 14 id. 15; *Kennebeck Railroad* v. *Portland Railroad*, id. 23; *Caperton* v. *Boyer*, id. 216.

A plea of not guilty, and several special pleas all ultimately leading to issues of fact, were filed. The jury found for the defendant, and judgment was rendered in his favor. There was no bill of exceptions embodying the evidence or the instructions of the court. The judgment of the Supreme Court, affirming, in general terms, that of the subordinate court, having been, for aught that the record discloses, rendered irrespectively of any matter of law which might have been raised upon the special pleas, presents nothing which justifies the conclusion that a Federal question was actually decided. Neither the published opinion of the Appellate Court, nor the assignment of errors there filed, constitutes a legitimate part of the record; and, therefore, although incorporated in it, furnishes no aid in determining whether jurisdiction exists here. *Medberry et al.* v. *State of Ohio*, 24 How. 413.

So far as the record is concerned, the whole case may have turned solely upon the insufficiency of the evidence to maintain the issue for the plaintiff upon the plea of not guilty.

If, however, this court takes jurisdiction, and considers that the validity of the special pleas is a subject of discussion here, it is submitted that they are sufficient to bar the action.

The property of the plaintiff alleged to have been destroyed at his residence in Mississippi, May 5, 1862, was cotton, an article which each belligerent regarded as possessing a special character, and treated, even in the hands of non-combatants, differently from ordinary private property. "It is well known," said this court in *Mrs. Alexander's Cotton* (2 Wall. 420), "that cotton has constituted the main reliance of the rebels for means to purchase the munitions of war in Europe. It is a matter of history, that, rather than permit it to come into possession of the national troops, the rebel government has everywhere devoted it, however owned, to destruction." The regulations established by the Federal government, the

acts of its officers, — military, naval, civil, — and the decisions of its courts, show what importance it attached during the war to that species of property, and how it would be disposed of if found in the hands of a resident of a State in rebellion. It was treated by the respective belligerents as contraband of war, and was by each the subject of special governmental control and action, whether for its preservation, seizure, confiscation, or destruction.

The Confederate States, in prosecuting the war, had the right to destroy such property found within the limits of their military occupation, in order to prevent its seizure by the United States. Being a *de facto* government, its statutes and orders must have been necessarily obeyed by all persons residing within those limits. By acts of obedience in submission to a power which they could not resist, such persons did not become responsible as wrong-doers. *Thorington* v. *Smith*, 8 Wall. 1, citing *United States* v. *Rice*, 4 Wheat. 246, and *Fleming* v. *Page*, 9 How. 603.

The plaintiff insists that the statute in question was a nullity, having no binding force in law; that the Confederate States were founded upon an usurpation of the authority and jurisdiction of the United States, and were not recognized by the latter even as a *de facto* government.

The authorities are not consistent upon the subject. While, therefore, a decree confiscating the property of a non-resident of the Confederate States, or sequestering a debt due to him or to the United States, would, although rendered in accordance with a statute, be held inoperative to pass the title to the property or to extinguish the debt, no decision can be found affirming that, in such a case as this, the statute in question would not afford a complete justification to the defendant.

In 1862 the war was in progress. Ford and Surget resided in Mississippi, and were there justly regarded and treated as having, by their own voluntary act, rendered themselves subject to the Confederate government. They were alike in rebellion, and in its cause risked person and property. The rebels, as between themselves, or as between themselves and the Confederate government, must be held to have acquiesced

in its authority, and to have incurred no liability by rendering obedience to its enactments.

Ford was, in judgment of law, a party to the acts of that government. 1 Kent, 68. He might perhaps have claimed compensation from it if the rebellion had been successful, but certainly not from Surget, acting under its order. They, and many thousands besides, established and recognized it as the government of their choice. It has perished; and Ford now asks that Surget be compelled to indemnify him for losses he sustained in their common attempts to maintain it and displace the authority of the United States. No court will sanction such an unreasonable and unjust demand. Vattel (ed. 1855), 402, sect. 232.

But rejecting as surplusage the allegation of the pleas touching the statute, they are a valid bar. The United States, from sound policy as well as humanity, conceded to the organized military forces of the Confederate States the same status and rights as if they had been engaged in warfare on behalf of a lawfully existing and independent power. The Federal army, in extending its sphere of successful operations, seized all cotton found within the insurgent States, and the proceeds of the sales of that species of property were paid into the treasury. The United States thus increased its resources for the prosecution of the war. Wherever, therefore, such property was liable to capture by that army, the Confederate commanders, in the absence of any statute of their government on the subject, had, by the laws of war, the same right to destroy it as if it had formed part of their public stores or munitions of war. The history of that eventful period renders it certain that the orders in the pleas mentioned would, at every hazard, have been carried into execution.

It is said, however, that Surget does not aver that he was in the military service. The allegation is that the provost-marshal was charged with the execution of those orders, and that by him Surget "was ordered and required to burn" the cotton for the loss of which this suit was brought. He was, therefore, subjected to the military power, and his obedience to its commands would have been undoubtedly enforced by the same

means of coercion as if he had been an enlisted soldier. The doctrine of *vis major*, therefore, applies.

MR. JUSTICE HARLAN, after stating the case, delivered the opinion of the court.

We can notice only the ground of demurrer, which suggests that the defendant in his pleas sought to rely "for justification of the trespass committed by him upon matters in themselves wholly illegal, against peace and good policy, and contrary to the Constitution of the United States, the supreme law of the land, and the government thereof."

In view of the decision in *Williams* v. *Bruffy* (96 U. S. 176), but little need be said upon the preliminary question of the jurisdiction of this court. What is there decided would seem to be conclusive, in this case, upon the point of jurisdiction. That was an action of assumpsit for goods sold in March, 1861, by citizens of Pennsylvania to one Bruffy, a citizen of Virginia. The administrator of Bruffy claimed that the estate was not liable for the debt sued for, because, pending the recent war, his intestate paid the debt to a receiver of the Confederate States, in pursuance of a decree of a Confederate district court in Virginia, rendered in conformity with the provisions of an act of the Confederate congress, passed Aug. 30, 1861, sequestrating the lands, tenements, goods, chattels, rights, and credits within the Confederate States, and of every right and interest therein, held by or for any alien enemy after May 21, 1861. That defence was sustained in the State courts, and, upon error, it was insisted that this court had no jurisdiction to review the final judgment of the Supreme Court of Appeals of Virginia. Referring to the provision in the statute conferring appellate jurisdiction upon this court, "where is drawn in question the validity of a statute of, or an authority exercised under, any State, on the ground of their being repugnant to the Constitution, treaties, or laws of the United States, and the decision is in favor of their validity;" and referring also to the provision conferring such jurisdiction, "where any title, right, privilege, or immunity is claimed under the Constitution, or any treaty or statute of, or commission held or authority exercised under, the United States, and the

decision is against the title, right, privilege, or immunity specially set up or claimed by either party under such Constitution, treaty, statute, commission, or authority," — this court decided that its right to review that judgment could be maintained upon both of those clauses of the amended Judiciary Act.

Some of the grounds of our decision are thus stated in the opinion of the court: —

"The pleas aver that a confederation was formed by Virginia and other States, called the Confederate States of America, and that under a law of this confederation, enforced in Virginia, the debt due to the plaintiffs was sequestrated. Now, the Constitution of the United States prohibits any treaty, alliance, or confederation by one State with another. The organization whose enactment is pleaded cannot therefore be regarded in this court as having any legal existence. It follows that whatever efficacy the enactment possessed in Virginia must be attributed to the sanction given to it by that State. Any enactment, from whatever source originating, to which a State gives the force of law, is a statute of the State, within the meaning of the clause cited relating to the jurisdiction of this court. . . . By the only authority which can be recognized as having any legal existence, that is, the State of Virginia, this act of the unauthorized confederation was enforced as a law of the commonwealth. Its validity was drawn in question on the ground that it was repugnant to the Constitution of the United States, and the decision of the court below was in favor of its validity."

We do not perceive that this case, upon the question of jurisdiction, can be distinguished from *Williams* v. *Bruffy*. The defendant, Surget, justifies his burning of the cotton under military orders, issued by a Confederate general, in pursuance of authority conferred by an act of the Confederate congress. If we regard substance rather than mere form or technical accuracy, the defence rested upon that act, the validity of which was, in terms, questioned by the several demurrers to the special pleas. The general orders of the State court overruling the demurrers must be accepted, in every essential sense, as an adjudication in favor of the validity of an act of the Confed-

erate congress, recognized and enforced as law in Mississippi, and which act, according to the rule laid down in that case, must be, therefore, regarded by us as a statute of that State, within the meaning of the provisions of the act declaring the appellate jurisdiction of this court. It results that we have power to review the final judgment of the Supreme Court of Mississippi.

We come now to the consideration of the merits of the case, so far as they seem to be involved in the demurrers to the special pleas.

The principles of public law, as applicable to civil and international wars, have been so frequently under discussion here, that we shall not avail ourselves of the opportunity now afforded to renew that discussion, or enlarge upon what has been heretofore said. The numerous decisions of this court, beginning with the *Prize Cases* (2 Black, 635), and ending with *Williams* v. *Bruffy* (*supra*) and *Dewing* v. *Perdicaries* (96 U. S. 193), render any further declaration as to these principles wholly unnecessary for the purposes of the present case. Without attempting to restate all the reasons assigned in adjudged cases, for the conclusions therein announced, we assume that the following propositions are settled by, or are plainly to be deduced from, our former decisions: —

1. The district of country declared by the constituted authorities, during the late civil war, to be in insurrection against the government of the United States, was enemy territory, and all the people residing within such district were, according to public law, and for all purposes connected with the prosecution of the war, liable to be treated by the United States, pending the war and while they remained within the lines of the insurrection, as enemies, without reference to their personal sentiments and dispositions.

2. There was no legislation of the Confederate congress which this court can recognize as having any validity against the United States, or against any of its citizens who, pending the war, resided outside of the declared limits of the insurrectionary districts.

3. The Confederate government is to be regarded by the

courts as simply the military representative of the insurrection against the authority of the United States.

4. To the Confederate army was, however, conceded, in the interest of humanity, and to prevent the cruelties of reprisals and retaliation, such belligerent rights as belonged under the laws of nations to the armies of independent governments engaged in war against each other, — that concession placing the soldiers and officers of the rebel army, as to all matters directly connected with the mode of prosecuting the war, "on the footing of those engaged in lawful war," and exempting "them from liability for acts of legitimate warfare."

5. The cotton for the burning of which damages are claimed in this civil action was, as to the United States and its military forces engaged in the suppression of the rebellion, not only enemy, but hostile property, because being the product of the soil, and, when burned, within the boundary of the insurrectionary district, it constituted also, as we know from the history of the insurrection it did, "the chief reliance of the rebels for means to purchase the munitions of war in Europe." *Young* v. *United States*, *supra*, p. 39; *Mrs. Alexander's Cotton*, 2 Wall. 404. It was therefore liable, at the time, to seizure or destruction by the Federal army, without regard to the individual sentiments of its owner, whether the purpose or effect of such seizure or destruction would have been to strengthen that army, or to decrease and cripple the power and resources of the enemy.

It would seem to be a logical deduction from these doctrines — a deduction strengthened by considerations of humanity and public necessity — that the destruction of the same cotton, under the orders of the Confederate military authorities, for the purpose of preventing it from falling into the hands of the Federal army, was, under the circumstances alleged in the special pleas, an act of war upon the part of the military forces of the rebellion, for which the person executing such orders was relieved from civil responsibility at the suit of the owner voluntarily residing at the time within the lines of the insurrection. We do not rest this conclusion upon any authority conferred or attempted to be conferred upon Confederate commanders by the statute of the Confederate congress, recited in

the special pleas. As an act of legislation, that statute can have no force whatever in any court recognizing the Federal Constitution as the supreme law of the land. It is to be regarded as nothing more than a declaration upon the part of the military representative of the rebellion, addressed to Confederate commanders, affording evidence to those adhering to the rebellion of the circumstances under which cotton within the lines of the insurrection might be destroyed by military commanders in the service of the Confederate States. It, however, assumed to confer upon such commanders no greater authority than, consistently with the laws and usages of war, they might have exercised, without the previous sanction of the Confederate legislative authorities, as to any cotton within their military lines likely to fall into the hands of the Federal forces. They had the right, as an act of war, to destroy private property within the lines of the insurrection, belonging to those who were co-operating, directly or indirectly, in the insurrection against the government of the United States, if such destruction seemed to be required by impending necessity for the purpose of retarding the advance or crippling the military operations of the Federal forces. Of that mode of conducting the war, on behalf of the rebellion, no one could justly complain who occupied the position of an enemy of the United States, by reason of voluntary residence within the insurrectionary district.

It is insisted with much earnestness that Surget should not be allowed to take shelter under these doctrines, since it is not averred in the special pleas that he constituted any part of, or held any official relations to, the military forces of the rebellion. But such a technical, narrow construction of the special pleas should not be allowed to prevail in a case like this. It is distinctly alleged that the Confederate government was, at the time of the burning of the cotton, exercising all the functions of civil government within the State of Mississippi, and over its property and inhabitants. It is further alleged that the defendant was an inhabitant and citizen of Mississippi, subject to Confederate power, authority, and jurisdiction, and that he was ordered and required by the provost-marshal — charged by the Confederate department commander with the execution of

the order to burn the cotton in Adams County likely to fall into the possession of the Federal forces — to burn the cotton on Ford's plantation, and that it was so burned in obedience to the act of the Confederate congress and the orders of the military authorities. These allegations seem to be sufficiently comprehensive to admit evidence that the defendant acted under duress or compulsion. Taking into consideration the extraordinary circumstances in which the people of Mississippi were then placed, especially the absolute authority which the Confederate government and its military commanders were then exercising over that portion of the territory and people of the United States, the special pleas should be deemed, upon demurrer, as sufficiently averring the existence of such relations between Surget and the Confederate military authorities as entitled him to make the same defence as any soldier, regularly enlisted in the Confederate army, acting under like orders, could have made. Whether Surget was, in fact, required to execute the order of the provost-marshal does not appear. No bill of exception was taken, and in view of the explicit averment that Surget was required by military authority to burn Ford's cotton, we cannot assume upon demurrer that he was a mere volunteer to aid in its destruction.

It will be observed that we have assumed, from the pleadings, as we think we are justified in doing, that Ford resided on his plantation in the insurrectionary district at the time his cotton was burned. The contrary is not alleged, and was not claimed in argument. He does not pretend that he resided in a loyal State, or adhered to the government of the Union in its efforts to suppress the rebellion. There is no intimation that his residence in Mississippi was, in any degree, constrained or temporary. Whether the redress here sought could, consistently with the provisions of the Federal Constitution, be denied to one who, by the laws of war, is to be deemed an enemy to the lawful government, solely by reason of residence within the insurrectionary district pending the struggle, but who, in point of fact, was a loyal citizen, adhering to the United States, giving no voluntary aid or comfort to the rebellion, it is not necessary for us now to decide. No such question is here presented, and we forbear any expression of opinion upon it. It will be

time enough to consider and determine that precise question when it arises.

Our conclusion, therefore, is that the act of the Confederate congress, recited in the special pleas, was of no validity as an act of legislation; and while the demurrers could not have been overruled upon the ground that such unauthorized legislation afforded protection to Surget, nevertheless, the general facts set out in the special pleas, considered in connection with the belligerent rights conceded to the rebel army by the government of the United States, do constitute a defence to this action, and upon this last ground the demurrer might have been properly overruled.

Whether the State court, in its instructions to the jury, correctly expounded the law of the case, we cannot, upon this review, determine. No bill of exception was taken, either as to the evidence or the instructions, and we cannot, therefore, determine what errors, if any, were committed in the trial of the case. We have limited our investigation altogether to the Federal questions raised by the demurrer to the special pleas.

Judgment affirmed.

MR. JUSTICE CLIFFORD concurred in the judgment of the court, and delivered the following opinion: —

Parties belligerent in a public war are independent nations; but it is not necessary that both parties should be acknowledged as such in order to the enjoyment of belligerent rights, as war may exist where one of the belligerents claims sovereign rights against the other, the rule being, that when the regular course of justice is interrupted by revolt, rebellion, or insurrection, so that the courts of justice cannot be open, civil war exists, and hostilities may be prosecuted to the same extent as in public war. *Prize Cases*, 2 Black, 666; Vattel, 425.

Two hundred bales of cotton owned by the plaintiff were burned by the defendant, during the war of the rebellion, at the time and place alleged in the declaration; and the plaintiff, since the restoration of peace, instituted the present action of trespass, in the State court, to recover damages for the loss. Service was made, and the defendant appeared and pleaded the general issue and several special pleas.

Reference need only be made to two of the special pleas: 1. That the defendant burned the cotton in obedience to an order of the Confederate States, given through the commanding general of their army and the acting provost-marshal of the county. 2. That the Confederate congress passed an act that it should be the duty of all military commanders in the service of the Confederate States to destroy all cotton, tobacco, or other property that might be useful to the enemy (meaning the military forces of the United States), whenever in their judgment the same should be about to fall into their hands, and that the defendant burned the cotton in litigation in pursuance of that act and the said orders of the said military commander and provost-marshal.

Suffice it to say, in this connection, the plaintiff demurred to all the special pleas; and the subordinate court overruled the demurrers, and the parties went to trial. Hearing was had before the jury, and they returned a verdict in favor of the defendant. Judgment was accordingly rendered upon the verdict; and the plaintiff removed the cause to the high court of errors and appeals of the State, where the parties were again heard, and the State appellate court affirmed the judgment of the court of original jurisdiction. No exceptions were filed by the plaintiff in either of the subordinate courts, but he sued out the present writ of error, and removed the cause into this court.

Since the case was entered here, the plaintiff assigns the following errors: 1. That the Supreme Court of the State erred in sustaining the Circuit Court in overruling the demurrers of the plaintiff to the special pleas filed by the defendant. 2. That the Supreme Court of the State erred in refusing to grant certain instructions to the jury, which cannot be considered, it not appearing that there was any trial by jury in the Supreme Court; nor would either party be benefited if it were otherwise, as all the material questions presented for decision in the prayers for instruction are involved in the rulings of the court in overruling plaintiff's demurrers to the defendant's special pleas.

Insurrection may or may not culminate in an organized rebellion, and it may or may not assume such aggressive

proportions as to be justly denominated territorial war, the universal rule being that rebellion becomes such, if at all, by virtue of its numbers and the organization and power of the persons who originate it and are engaged in its prosecution. But when the party in rebellion hold and occupy certain portions of the territory of the rightful sovereign, and have declared their independence, cast off their allegiance, and formed a new government, and have organized armies and raised supplies to support it, and to oppose, and if possible to destroy, the government from which they have separated, the world and the law of nations acknowledge them as belligerents engaged in civil war, because they claim to be in arms to establish their liberty and independence in order to become a sovereign State.

History furnishes many examples of war between the government *de jure* of a country and a government *de facto* of a seceding portion of the same country; and in such cases jurists hold that other powers are entitled to remain indifferent spectators of the contest, and to allow impartially to both belligerents the free exercise of those rights which war gives to public enemies against each other, such as the right of search, the right of blockade, the right of capturing contraband of war and enemy's property laden in neutral vessels. Twiss, Law of Nations (2d ed.), sect. 239.

Rebellions of the kind, when they become too formidable to be suppressed by the duly constituted civil authorities, authorize the *de jure* government to blockade the ports within the territory occupied by the insurgents, and to notify the same to foreign powers that the same will be enforced pursuant to the law of nations. Official notice of such a proclamation makes it the duty of foreign nations to conform to the international rules of war in that regard; and the same jurist says that the foreign power must at once decide upon one of three alternative courses of action. It may assist the government *de jure* as an independent power, or it may assist the insurgents, in either of which cases it becomes a party to the war; or it may remain impartial, still continuing to treat the government *de jure* as an independent power, whilst it treats the insurgents as a community entitled to the rights of war against its adversary. Such a concession is indispensable, as the neutral power will

find it impossible to recognize the character of one as a belligerent without recognizing the belligerent character of the other, unless the war is confined entirely within the territory of the contending parties and does not extend in any respect to the highway of nations. Id. p. 500.

Belligerents engaged in war may exercise the right of blockade, and they may capture contraband of war and enemies' property laden in neutral vessels; and if so, the contest, though it originated in rebellion, must in the progress of events, when it assumes such proportions as to be justly denominated civil war, be recognized as entitling both parties to the rights of war just as much as if it was waged between two independent nations.

Lawful blockade can only be established by a belligerent party, the rule being that a neutral country has a right to trade with all other countries in time of peace, and when in time of war the right is subjected to the conditions or restrictions resulting from blockade, the interruption of the untrammelled right can only be justified because the party imposing the conditions and restrictions is invested with belligerent rights under the law of nations. *Ex parte Chavasse, In re Grazebrook*, 4 De G., J. & S. 655; *The Helen*, Law Rep. 1 Ad. & Ec. 1; DeBurgh, Marine Int. Law, 128; *The Trinidad*, 7 Wheat. 340.

Independent powers at war may seize and confiscate all contraband goods, without any complaint on the part of the neutral merchant; and that right is conceded even when one of the parties is not acknowledged as a *de jure* government, in case of insurrection, where the contest has assumed such proportions as justly constitute it a civil war in the international sense. 1 Kent, Com. (12th ed.) 92.

Other nations as well as the United States conceded belligerent rights to the Confederate States, as all admit, which renders it unnecessary to inquire whether the concession was rightful or premature. Matters to be taken into the account in determining such a question, it is said, are whether the insurgents present the existence of a *de facto* political organization, sufficient in character, population, and resources to constitute it, if left to itself, a State among the nations reasonably capable of discharging the duties of such an organization.

Due weight should be given to the then existing character of the actual conflict, having respect to the military force on each side and the action of the parties in conducting military operations against each other; as whether or not they conduct such operations in accordance with the rules and customs of war, as by the use of flags of truce, cartels, and exchange of prisoners, and whether the parent State treats captured insurgents as prisoners of war. Inquiry may also properly arise whether the insurgents have employed commissioned cruisers at sea, and whether the rightful government has exercised the right to blockade the ports of the insurgents against neutral commerce, and that of stopping and searching neutral vessels engaged in maritime commerce. If all these elements exist, says Dana, the condition of things is undoubtedly war, and it may be war before they are all ripened into activity. Dana's Wheaton, p. 34, note.

Apply those rules to the case, and it is as clear as any thing in legal decision can be, that the Confederate States were belligerents in the sense attached to that word by the law of nations. During the military occupation of the territory within the Confederate lines the sovereignty of the United States was so far suspended, that the Federal laws could no longer be enforced there, and the inhabitants passed under a forced allegiance, and were bound by such laws as the usurping government saw fit to recognize and impose. *United States* v. *Rice*, 4 Wheat. 254.

Civil war, says Vattel, breaks the bands of society and government, or at least suspends their operation and effect; for it produces in the nation two independent parties, who consider each other as enemies, and acknowledge no common judge. Those two parties, therefore, must necessarily be considered as thenceforward constituting, at least for a time, two separate bodies, two distinct societies. Though one of the parties may have been to blame in breaking the unity of the State and resisting the lawful authority, they, the two parties, are not the less divided in fact. . . . They stand, therefore, in precisely the same predicament as two nations who engage in a contest, and being unable to come to an agreement have recourse to arms.

Publicists and courts of justice everywhere concur in these sentiments, and in certain corollaries which the author deduces from the attending circumstances; to wit, that the common laws of war — those maxims of humanity, moderation, and justice previously pointed out — ought to be observed by both parties in such a conflict. Vattel, 425.

For the same reasons which render the observance of those maxims a matter of obligation between State and State, it becomes equally and even more necessary in the unhappy circumstance of two incensed parties in the case of civil war. Should the sovereign conceive that he has a right to hang up his prisoners as rebels, the opposite party will make reprisals, as in the example given in the note, and if he does not observe the terms of the capitulations and all other conventions with his enemies, they will no longer rely on his word. Should he burn and ravage, they will follow his example, and the war will become cruel, horrible, and every day more destructive to the nation.

War, it is said, may exist without a formal declaration; and the decision of the court is, that the laws of war as established among nations have their foundation in reason, and tend to mitigate the cruelties and miseries which such conflicts produce. *Prize Cases*, 2 Black, 669. Hence, say the court, the parties to a civil war usually concede to each other belligerent rights, for they exchange prisoners, and adopt the other courtesies and rules common to public or national war; nor is it necessary that the independence of the revolted province or State should be acknowledged in order to constitute it a party belligerent in a war, according to the law of nations; and the reason given for the rule is one of frequent illustration, which is, that foreign nations acknowledge it as war by a declaration of neutrality, of which two examples are given in the opinion of the court from which these rules are drawn. 1. When the United States recognized the existence of civil war between Spain and her colonies. *The Trinidad*, 7 Wheat. 327. 2. When the Queen of England issued her proclamation of neutrality recognizing hostilities as existing between the United States and the Confederate States.

Other nations followed with a similar declaration or by silent

acquiescence; and in speaking of that fact this court say, that a citizen of a foreign State, in view of such a recognition, is estopped to deny the existence of a war, with all its consequences as regards neutrals. They cannot ask a court to affect a technical ignorance of the existence of a war which all the world acknowledges to be the greatest civil war of the human race, and thus cripple the arm of the government and paralyze its power.

Such a war usually operates as a temporary suspension of obedience of the revolting party to the lawful sovereign; but other nations may, until the revolution is consummated, remain indifferent spectators of the controversy, treating the government as sovereign and the new government as a society entitled to the rights of war against its enemy, or they may espouse the cause of the party which they believe to have justice on its side. In the first case, the foreign State fulfils all its obligations under the law of nations, and neither party has any right to complain, provided that it maintains an impartial neutrality; but in the latter case, the foreign State becomes the enemy of the party against which it declares, and the ally of the other. Lawrence's Wheaton, 40, and notes.

Belligerent rights cannot be exercised when there are no belligerents. Conquest of a foreign country, if permanent, gives absolute and unlimited right; but no nation can make such a conquest of its own territory. If a hostile power, either from without or within a nation, takes possession and holds absolute dominion over any portion of its territory, and the nation by force of arms expels or overthrows the enemy and suppresses hostilities, it acquires no new title, but merely regains the possession of what it had been temporarily deprived. Id. 605; *The Amy Warwick and Cargo*, 24 Law Reporter, 494.

Cotton was the article destroyed, which was the subject during the war of special legislation by each belligerent power. It was treated by the army, the navy, and the civil arm of each as possessing extraordinary qualities, and as different from other property, even in the hands of non-combatants. It formed the basis of the credit which the Confederates were seeking to establish abroad for the prosecution of the war. Its retention in the Southern States and withdrawal from market, except

when for war purposes, were considered by the Confederate authorities as of vital importance; for it was hoped that its withdrawal from market would hasten a recognition of the independence of the States in rebellion, and the raising of the blockade which was destroying their resources and crippling their armies.

Prior to the burning of the cotton, the Confederate congress had directed by a legislative act, as a war measure, that cotton and tobacco liable to fall into the hands of the Federal forces should be destroyed; and the history of the period shows that immense quantities of these articles were accordingly destroyed. Regulations upon the subject were adopted by the authorities of the United States; and those regulations, as well as the decisions of the Federal courts, show that both the civil and military authorities deemed it of great importance, to prevent its accumulation in the hands of the Confederate authorities.

Capture of cotton, says Mr. Chief Justice Chase, seems to have been justified by the peculiar character of the property and by positive legislation. It is well known that cotton constituted the main reliance of the rebels to purchase the munitions of war in the foreign market, and it is matter of history that rather than permit it to come into the possession of the national troops, the rebel government everywhere devoted it, however owned, to destruction. *Mrs. Alexander's Cotton*, 2 Wall. 420.

Judicial history shows that, early in 1861, the authorities of seven States, supported by popular majorities, combined for the overthrow of the national Union, and for the establishment within its boundaries of a separate and independent confederation. Pursuant thereto, a governmental organization representing those States was established at Montgomery, first under a provisional constitution, and afterwards under a constitution intended to be permanent. In the course of a few months four other States acceded to that confederation, and the seat of the central authority was transferred to Richmond. It was by the central authority thus organized and under its direction that civil war was prosecuted, upon a vast scale, against the United States for more than four years, and its power was recognized as supreme in nearly the whole of the territory of

the States confederated in insurrection. *Thorington* v. *Smith*, 8 Wall. 7.

Difficulty, says the Chief Justice, would attend the effort to define the precise character of such a government; but he continues to remark to the effect that the principles relating to *de facto* government will conduct to a conclusion sufficiently accurate. Examples of a *de facto* government are given by him, where the usurpers expelled the regular authorities from their customary seats and functions, and established themselves in their places, and so became the actual government.

Such adherents to a usurping party in certain cases may not incur the penalty of treason, as the *de jure* government when restored usually respects their public acts; but the Confederate States were never acknowledged by the United States as a *de facto* government in that enlarged sense. Instead of that, it was regarded as simply the military representative of the insurrection, notwithstanding the duration and vast proportions of the revolt. Eleven States were engaged in it, and the prior existing governments were overthrown and new governments erected in their stead, in violation of the Constitution and the acts of Congress; and yet it cannot be denied but that by the use of these unlawful and unconstitutional means a government in fact was erected, greater in territory than most of the European governments, complete in the organization of all its parts, containing within its limits more than eleven millions of people, and of sufficient resources in men and money to carry on a civil war of unexampled dimensions from the period of its commencement to its final termination, during all of which time many belligerent rights were conceded to it by the United States; such as the treatment of captives both on land and sea as prisoners of war, the exchange of prisoners as in international war, their vessels captured recognized as prizes of war and dealt with accordingly, their property seized on land referred to the judicial tribunals for adjudication, their ports blockaded and the blockade maintained by a suitable force, and notified to neutral powers the same as in open and public war. *Mauran* v. *Insurance Company*, 6 Wall. 1.

Governments *de facto* are described by Mr Chief Justice

Chase as divided into classes; and, after having given a description of two of the classes, he remarks that there is another, called by publicists a *de facto* government, but which might perhaps be more aptly denominated a government of paramount force. Its distinguishing characteristics as given by that magistrate are as follows: 1. That while it exists it must necessarily be obeyed, in civil matters, by private citizens, who, by acts of obedience rendered in submission to such force, do not become responsible as wrong-doers for those acts, though the acts are not warranted by the rightful government. Actual governments of this sort are established over districts differing greatly in extent and conditions. They are usually administered directly by military authority, but they may be administered also by civil authority, supported more or less directly by military force. 2. Historical examples are then given of that sort of *de facto* government; to wit, the temporary government at Castine during the war of 1812, and the temporary government at Tampico during the Mexican war. *United States* v. *Rice*, 4 Wheat. 253; *Fleming* v. *Page*, 9 How. 615; *The Nuestra Senora*, 4 Wheat. 502.

Those were cases where regular enemy governments acquired the temporary possession of territory during war with the country of which the territory so possessed was a part; and this court adverted to that difference in the case under consideration, but decided unanimously that the government of the insurgent States must be classed among the governments of which those are examples. Among the reasons assigned in support of the conclusion were the following: 1. That rights and obligations of belligerence were conceded to it in its military character very soon after the war began, from motives of humanity and expediency. 2. That the whole territory controlled by it was thereafter held to be enemies' territory, and the inhabitants of the territory were held, in most respects, as enemies; and, as a final conclusion, the court decided that to the extent of the actual supremacy maintained, however unlawfully acquired, the power of the insurgent government cannot be questioned. *Thorington* v. *Smith*, 8 Wall. 11; Halleck, Int. Law, c. 8, sect. 21, p. 74; *United States* v. *Klintock*, 8 Wheat. 150.

Attempt was made early in the war of the rebellion to maintain the theory that the officers and seamen of the Confederate cruisers were pirates, and not entitled to belligerent rights in case of capture. Ships and cargoes at sea were destroyed by such cruisers, and the owners, holding policies of insurance, brought suits to recover for the loss. Payment in certain cases was refused, the defence being that the policies did not cover the loss where the capture was by pirates. Such a case was presented to the Supreme Court of Massachusetts, but the court decided that the persons who seized and burned the ship were not to be regarded as pirates, within the ordinary signification of that word as used in the law of nations, or as commonly understood and applied in maritime contracts and adventures; that they were not common robbers and plunderers on the high seas. The court admitted that the acts of the cruisers were unlawful, and that they could not be justified in the courts of justice, but it proceeded to state that the proofs offered showed that they acted under a semblance of authority which took their case out of that class which can be properly termed ordinary piracy; that the proofs offered showed that they sailed under a letter of marque issued by a government *de facto*, claiming to exercise sovereign powers, and to be authorized to clothe their officers and agents with the rights of belligerents and to send out armed cruisers for the purpose of taking enemy's vessels *jure belli*.

Nor is that all. It was also offered to be proved that at the time of the loss the *de facto* government had proceeded to raise armies and put them into the field, by which an actually existing state of war between it and the United States was created, which had led two of the leading nations of Europe to recognize the persons who had thus conspired together against the authority of the United States as exercising the rights and entitled to the privileges of a belligerent power. Such a seizure, under such circumstances, by an armed cruiser of such *de facto* government, the court held was a capture within the meaning of the policy, and that the insurers were not liable for the loss. *Dole and Another* v. *Merchants' Mutual Marine Insurance Co.*, 6 Allen (Mass.), 373; *Planters' Bank* v. *Union Bank*, 16 Wall. 495.

Two cases of a similar character were pending at the same time in the Circuit Court of the United States for that district, both of which were decided in favor of the insurers upon the same ground. In the first case, the facts were agreed between the parties, as will be seen by the report of the case. *Dole et al.* v. *New England Mutual Marine Insurance Co.*, 2 Cliff. 394. Both judges sat in the case, and their united opinion is fully reported. They decided that, where a ship was taken and burned by the commander of a rebel privateer during the late rebellion, the capture was not a taking by pirates or assailing thieves, inasmuch as it appeared that the policy was executed before the rebellion broke out, and that the commander acted under a commission in due form issued by the government of the rebellious States, and it appears that both parties acquiesced in the decision of the court.

Nor could they well do otherwise, as the agreed statement showed that the rebel States before the loss occurred had organized a confederacy and a government for the same, and had established a written constitution; that such a form of government was in fact organized in all its departments,—legislative, executive, and judicial; that they had raised and organized an army and created a navy, elected a congress, and published a legislative act declaring that war existed between the United States and the Confederate States, and providing measures for its vigorous prosecution; that they were carrying on hostilities at the time the loss occurred against the United States by land and sea, and were in the exercise of all the functions of government over all the territory within their actual military limits.

Pressed with those facts, the plaintiff abandoned the further prosecution of the claim in the first suit, and sued out a writ of error in the second, which was subsequently heard and decided in this court. *Mauran* v. *Insurance Company*, 6 Wall. 1. Offers of proof in this case occupied the place of an agreed statement of facts in the other; but the Supreme Court affirmed the judgment of the Circuit Court, holding that the Confederate States were in the possession of many of the highest attributes of government, sufficiently so to be regarded as the ruling or supreme power of the country within their military dominion,

and that captures made by their cruisers were excepted out of the policy by the warranty of the insured.

Questions of the same character were also presented to the Supreme Court of Pennsylvania about the same time as those presented to the Supreme Court of Massachusetts, where the questions were decided in the same way. *Fifield* v. *Insurance Company of Pennsylvania*, 47 Pa. St. 166. Three opinions were given in the case, in addition to the opinion of the court delivered by the Chief Justice. His first effort was to show that the cruiser was not a pirate, in which he remarked, that if she was not a privateer she was a pirate, and that if she was a privateer she was made so by the commission she bore, the legal effect of which must depend upon the status of the Confederate States, in respect to which his conclusion was that any government, however violent and wrongful in its origin, must be considered a *de facto* government if it was in the full and actual exercise of sovereignty over a territory and people large enough for a nation; and he quotes Vattel in support of the proposition, and finally decided that the cruiser was a privateer and not a pirate, and that the loss was a capture within the excepting clause of the policy, and not a loss by pirates, rovers, or assailing thieves. Emerigon, Ins., c. 12, sects. 28, 412.

Mr. Justice Strong concurred in the judgment, and gave an elaborate opinion, in which he stated that he could not doubt that these revolting States, confederated as they had been, claiming and enforcing authority as they had done, were to be regarded as a government *de facto*.

Two objections to that proposition had been made at the bar: 1. That their claim of sovereignty had been constantly opposed; 2. That their boundaries were uncertain and undefined, — to both of which the judge responded to the effect that neither of the objections were satisfactory: that they were none the less a government *de facto* because they had had no interval of peaceful existence, nor because the geographical boundaries of the district over which their power is exclusively felt were not well defined.

Antecedent to that, the same court decided a similar case, which was also a marine risk, in the same way. Two points ruled by the court in that case are pertinent to the present

investigation: 1. That the loss was covered by the policy, it being a case of capture by armed men professing to act under and by authority of the Confederate States. 2. That the government of the United States had so conducted the contest and so treated the Confederate States as to make it a war in substance as essentially as it could be between foreign powers. *Monongahela Insurance Co.* v. *Chester*, 48 Pa. St. 49; *Hamilton* v. *Dillin*, 21 Wall. 87.

Support to that proposition, of a decisive character, is found in the opinion of the court in the *Prize Cases*, in which Mr. Justice Grier says, It is no loose, unorganized insurrection, having no defined boundary or possession. It has a boundary marked by lines of bayonets, and which can be crossed only by force. South of this line is enemies' property, because it is claimed and held in possession by an organized, hostile, and belligerent power. *Prize Cases*, 2 Black, 674.

Corresponding litigation arose about the same time in other courts, and among the number in the Supreme Court of Maine, where the case was argued by the same eminent counsel as in that cited from the Massachusetts reports. *Dole et al.* v. *Merchants' Mutual Marine Insurance Co.*, 51 Me. 465. Somewhat different views are expressed by the court, but it admits in conclusion that the decision might have been placed on a different ground, and proceeds to remark that war in fact existed at the time of the loss; that hostile forces, each representing a *de facto* government, were arrayed against each other in actual conflict. Its existence, says the court, would not have been more palpable or real if it had been recognized by legislative action, and though it was a civil war, it was not the less a capture for that reason. 51 id. 478; *Horn* v. *Lockhart*, 17 Wall. 55.

During the late rebellion the Confederate States and the States composing it, say the Supreme Court of North Carolina, were to all intents and purposes governments *de facto* with reference to citizens who continued to reside within the Confederate lines; hence the Confederate States and the Constitution of the State and the acts of their congress constituted, *as to such citizens*, during the rebellion, the law of the land. *Franklin* v. *Vannoy et al.*, 66 N. C. 145; *Reynolds* v. *Taylor*, 43 Ala. 420.

Where cotton was destroyed during the late war between the Confederate States and the United States by order of the county provost-marshal, acting in obedience to the orders of the Confederate commanding general, the Supreme Court of Mississippi held that the agent who obeyed these orders is not liable in an action by the owner to recover the value of the property, the court holding that the Confederate States had the rights of a belligerent power, and that it is a legitimate belligerent right to destroy whatever property is the subject of seizure and condemnation, in order to prevent its falling into the hands and coming to the use of the enemy. *Ford* v. *Surget*, 46 Miss. 130. Exceptional cases supporting the opposite view may be found in the State reports; but they are not in accord with the decisions of this court, and are in direct conflict with the great weight of authority derived from the same source.

Without due examination, it may be supposed that support to the opposite theory is derived from the recent decision of this court, in which it is held that certain confiscation proceedings prosecuted under an act passed by the Confederate congress are void; but it requires no argument to show that the remarks upon the subject in the opinion of the court were wholly unnecessary to the decision, as the proceedings were obviously in aid of the rebellion, the intent and purpose of the prosecution having been to raise means to prosecute war against the United States. *Conrad* v. *Waples*, 96 U. S. 279. Authorities to show that all such acts are void are too numerous for citation, no matter what may have been the status of the Confederate States.

Certain decisions of this court hold that the acts of a body exercising an authority in an insurgent State as a legislature must be regarded as valid or invalid, according to the subject-matter of legislation; but the Chief Justice decided in the case hereafter referred to that the governor, legislature, and judges of the State of Virginia, during the war, constituted a *de facto* government, giving as a reason for the conclusion that they exercised complete control over the greater part of the State, proceeding in all the forms of regular organized government, and occupying the capital of the State. *Evans* v. *City of Richmond*, Chase, Dec. 551.

Beyond all doubt, the Confederate government at the period of the alleged wrong was the supreme controlling power of the territory and people within the limits of their military dominion, and it is equally certain that the citizens resident within those limits were utterly destitute of means to resist compliance with military orders emanating from the commanding general, especially when given in obedience to an act of the Confederate congress. *United States* v. *Grossmayer*, 9 Wall. 75; *Sprott* v. *United States*, 20 id. 459.

Cotton during the war was regarded by both belligerents as the subject of seizure and condemnation, and as falling within that class of property which a belligerent might destroy to prevent its falling into the hands of the enemy and augmenting his resources. Proof that the orders were given as alleged is sufficient, as that is fully admitted by the demurrer.

Unless the Confederate States may be regarded as having constituted a *de facto* government for the time or as the supreme controlling power within the limits of their exclusive military sway, then the officers and seamen of their privateers and the officers and soldiers of their army were mere pirates and insurgents, and every officer, seaman, or soldier who killed a Federal officer or soldier in battle, whether on land or the high seas, is liable to indictment, conviction, and sentence for the crime of murder, subject of course to the right to plead amnesty or pardon, if they can make good that defence. Once enter that domain of strife, and countless litigations of endless duration may arise to revive old animosities and to renew and inflame domestic discord, without any public necessity or individual advantage. Wisdom suggests caution, and the counsels of caution forbid any such rash experiment.

Viewed in the light of these suggestions, I am of the opinion that there is no error in the record, and that the decree of the Supreme Court of the State should be affirmed.

HOWLAND v. BLAKE.

A., to secure the payment of money borrowed from B., mortgaged land to the latter, who commenced proceedings in foreclosure, and obtained a decree under which he purchased the land, and received a deed therefor from the proper officer. He subsequently conveyed it to C. Eight years after the death of B., A. filed his bill against C., alleging a parol agreement whereby he was to make no defence to the foreclosure; that the equity of redemption, notwithstanding the sale and the deed made pursuant thereto, should not be thereby barred, but that B., on receiving his debt from the rents and profits of the land, should convey it to A.; that B., desiring to be repaid at an earlier date, C., at A.'s instance, paid the same, and took a deed from B. with a full knowledge of the agreement between the latter and A.; that C. agreed that, when reimbursed out of the rents and profits of the land, he would convey it to A. *Held*, 1. That, in order to make out his alleged agreement with B., the burden was upon A. to produce evidence of such weight and character as would justify a court in reforming a written instrument, which, upon the ground of mistake, did not set forth the intention of the parties thereto. 2. That such evidence not having been produced to show the alleged agreement, and A.'s continuing interest in the land, his parol agreement with C. was void, under the Statute of Frauds.

APPEAL from the Circuit Court of the United States for the Eastern District of Wisconsin.

The facts are stated in the opinion of the court.

The case was argued by *Mr. D. G. Hooker* for the appellant, and by *Mr. John T. Fish* for the appellee.

MR. JUSTICE HUNT delivered the opinion of the court.

This suit was commenced in 1873, and the claim may be stated thus: In 1857, Isaac Taylor loaned to Eugene Howland, upon a mortgage, the sum of $7,000, to enable him to complete the erection of certain buildings upon premises in the city of Racine, the entire cost of which was about $24,000, and which when completed produced an annual rent of $2,200.

Soon after the buildings were completed an agreement was made between the parties, which was carried out, that the possession of the property should be surrendered to Taylor, who should enter into possession and receive the rents, until the net proceeds thereof should pay the principal and the interest of the mortgage.

In 1861, while thus in possession, Taylor commenced a suit

to foreclose his mortgage, claiming the sum of about $7,000 as due to him. Judgment was rendered, a sale had, and Taylor becoming the purchaser for the sum of $9,300, a deed was executed to him by the sheriff.

It is claimed that, while this foreclosure suit was in progress, it was agreed that Howland should make no defence, but allow a sale to take place; that Taylor should still hold the premises as security for the payment of the mortgage debt, and, when the rents had been sufficient for that purpose, reconvey the premises to Howland.

It is alleged that, under this agreement, Taylor purchased and remained in possession until April, 1863; that about that time he desired the payment of his money, and requested Howland to procure some other person to advance it; that Howland thereupon informed Blake and Elliott of all the facts before stated, requesting them to advance the money and take a conveyance from Taylor; that a conveyance to them from Taylor, absolute in form, was thereupon made, but upon the agreement that they would pay Taylor's debt, retain the premises until the rents thereof should reimburse them, and then would reconvey the premises to Howland; that from that time until the commencement of the present action against them they have been in possession, receiving the rents which greatly exceeded the mortgage debt, with interest, taxes, insurance, and repairs. An account and a reconveyance are demanded.

An answer on oath having been waived, Blake and Elliott, the defendants, denied all the equities of the bill, and alleged other matters in defence. Taylor died in November, 1865.

At the hearing upon the pleadings and proofs, the bill was dismissed, upon the ground that where a mortgage had been foreclosed by action, and the equity of redemption sold by a decree of the court, and an absolute title given by the proper officer to the purchaser at such sale, evidence to show that a parol agreement was made pending the litigation, by which the interest to be obtained under the sale should remain a mortgage interest only, was incompetent. Howland appealed to this court.

The appellees, in addition to this ground of defence, insist

that the evidence does not establish the alleged agreement, and that the complainant had no equity of redemption in the premises after the twenty-second day of May, 1860, when his interest in the same was sold by the sheriff of Racine County to Daniel P. Rhodes for $1,000, in pursuance of a decree of the Circuit Court of that county in proceedings to foreclose the lien of Wiltsie & Hetrick for materials used in erecting the buildings on the said premises.

We do not think it necessary to pass formally upon the legal position assumed by the Circuit Court, that parol evidence is not admissible to impeach a title acquired at a judicial sale, nor upon the contention that the sale to Rhodes, upon the proceeding to foreclose the lien of a material-man, terminated any alleged interest of Howland in the property.

The case may be decided upon a principle governing a class of cases of the same nature. Among them there are the following: Where a written instrument is sought to be reformed upon the ground that by mistake it does not correctly set forth the intention of the parties; or where the declaration of the mortgagor at the time he executed the mortgage, that the equity of redemption should pass to the mortgagee; or where it is insisted that a mortgagor, by a subsequent parol agreement, surrendered his rights. These and the case we are considering are governed by the same principle.

In each case the burden rests upon the moving party of overcoming the strong presumption arising from the terms of a written instrument. If the proofs are doubtful and unsatisfactory, if there is a failure to overcome this presumption by testimony entirely plain and convincing beyond reasonable controversy, the writing will be held to express correctly the intention of the parties. A judgment of the court, a deliberate deed or writing, are of too much solemnity to be brushed away by loose and inconclusive evidence. Story, Eq. Jur., sect. 152; *Kent* v. *Lasley*, 24 Wis. 654; *Harrison* v. *Juneau Bank*, 17 id. 340; *Harter* v. *Christoph*, 32 id. 246; *McClellan* v. *Sanford*, 26 id. 595.

In this case, the evidence falls far short of affording this satisfactory conviction. It is not necessary to say that the complainant's claim is not made out, or that such claim is

overthrown by the evidence of the defendants. We are all, however, of the opinion that the presumption of the deeds is not overcome by satisfactory and convincing proofs.

The testimony is voluminous and conflicting. It is enough to say that the only direct evidence of an agreement by Isaac Taylor that the foreclosure should not operate as such, but that the transaction should continue to be a mortgage, is that of R. W. Howland, a brother of the mortgagor. Throughout the whole transaction he was the person conducting the business on the part of the complainant, who was an absentee. He occupies very nearly the position of a party, and upon the unspotted testimony of a party two of the cases above cited adjudge that such a decree cannot be sustained.

Much also depends upon the value of the property in 1862; and upon this point the testimony is quite conflicting, the opinions as to its value ranging from $8,000 to $26,000. *Russell* v. *Southard*, 12 How. 139.

The warranty title given by Isaac Taylor, the party who it is alleged made the agreement, was not challenged until eight years after his death, and ten years after the sale on the foreclosure. He is proven to have been not only an upright, honest man, but skilful and astute in the transaction of his business. His one peculiarity was that of reducing to writing his most ordinary transactions, that there might be neither misunderstanding nor mistake.

Taylor took his mortgage of $7,000 in October, 1857. Soon after the buildings were completed, he entered into possession and received the rents. He did this, in pursuance of his habit, by virtue of a written authority from the mortgagor. In August, 1861, he commenced a foreclosure suit, and in June, 1862, perfected his title thereunder by a judicial sale and a sheriff's deed.

To show that he deliberately agreed that these proceedings should stand for nothing, and he be a mortgagee still, requires much more conclusive evidence than is here presented.

There is, undoubtedly, evidence produced by the complainant to sustain his claim; but, after a careful perusal of it, we are by no means satisfied that it is of the character and extent required by the principles above laid down.

The same is true of the agreement alleged to have been made by the defendants, Blake and Elliott. Its existence is denied by each of them, and it is not sufficiently proved for the purpose of this action.

This is not, however, so important. Unless the equity of redemption of Howland was kept alive by the alleged agreement with Taylor, he had no interest which could sustain a parol agreement by the defendants to buy the property for his benefit, and to convey to him when required. Such an agreement is one creating by parol a trust or interest in lands, which cannot be sustained under the Statute of Frauds. It is a naked promise by one to buy lands in his own name, pay for them with his own money, and hold them for the benefit of another. It cannot be enforced in equity, and is void. *Levy* v. *Brush*, 45 N. Y. 589; *Richardson* v. *Johnsen*, 41 Wis. 100; *Payne* v. *Patterson*, 77 Pa. St. 134; *Bander* v. *Snyder*, 5 Barb. (N. Y.) 63; *Lathrop* v. *Hoyt*, 7 id. 59; Story, Eq. Jur., sect. 1201 *a* (11th ed.).

Decree affirmed.

DAVIE *v.* BRIGGS.

1 A person who for seven years has not been heard of by those who, had he been alive, would naturally have heard of him, is presumed to be dead; but the law raises no presumption as to the precise time of his death.

2. The triers of the facts may infer that he died before the expiration of the seven years, if it appears that within that period he encountered some specific peril, or came within the range of some impending or imminent danger which might reasonably be expected to destroy life.

3. This court adopts the construction of the Supreme Court of North Carolina that the term "beyond the seas," where it occurs in the Statute of Limitations of that State, means "without the United States."

APPEAL from the Circuit Court of the United States for the Western District of North Carolina.

The history of this litigation is substantially as follows: —

The land, containing about two hundred acres, the proceeds of which are involved in this suit was conveyed in the year 1829, for the consideration of $6,000, by John Teague, its then

owner, to F. W. Davie, of South Carolina, a brother of Allen Jones Davie. In the succeeding year, F. W. Davie leased it, upon certain terms and conditions, to one McCulloch, for the term of twenty years, and in 1831, for the consideration of $5,000, he conveyed to the latter an undivided one-third of the whole tract, with the exclusive right to direct and manage the working of the mines thereon and to receive one-third of the profits arising therefrom, and a few months thereafter he, for the consideration of $3,000, conveyed an undivided third of the same tract, with all the emoluments and profits arising therefrom, to his brother, Hyder A. Davie.

The complainants claim that subsequently, on the 15th of January, 1833, F. W. Davie, in accordance with an agreement, which at the time of his purchase from Teague he made with Allen Jones Davie, conveyed the remaining undivided third of the tract to Cadwalader Jones, Sen., with all the rights and privileges thereunto belonging, in trust, to permit said Allen, his wife, and their children then living or thereafter resulting from their marriage, to have and receive the rents, profits, and issues of the said premises, and of all mines thereon found, for the joint use of said Allen, his wife and children, during the lifetime of the said Allen, and after his death to permit his wife and children to receive the said rents, profits, and issues, and after the death of the wife to convey the premises, &c., to such children and their issue, free and discharged from all trusts whatsoever; the conveyance, however, being upon the condition that the land and mines should be liable for one-third of such amount as upon settlement should be found to have been expended by F. W. Davie in working the mines. Upon that conveyance, which was never registered, and is alleged to have been lost, the complainants, heirs-at-law of said Allen, rest as the foundation of their right to the relief asked. The defendants deny that any such conveyance was ever executed and delivered by F. W. Davie as his act and deed. Said Allen, at the time of its alleged execution and delivery, was residing upon the land with his family, and had some connection with the working or management of the mines, the precise nature of which does not appear. Difficulties occurred between him and McCulloch, which gave rise to a suit in 1833 in the equity

court of Guilford County, in the name of "Allen Jones Davie and others," against McCulloch. The papers in that suit had all disappeared when this was commenced, and nothing remained to indicate the nature of the issues but a few scattered minutes upon the trial docket. From them it appears that an injunction of some kind was granted against McCulloch which interfered with his mining operations. By an order made in 1836, the master was directed to ascertain the damages which McCulloch sustained by reason of the injunction. The final order in that case seems to have been made in 1840, in the Supreme Court, to which it was transferred for trial. That order is in these words: "The deeds mentioned in the rules made at the last term in this cause not having been exhibited and filed in the office of this court by the time therein directed, it is ordered that the plaintiffs' bill be dismissed out of this court, with costs to be taxed by the proper officers, but without prejudice to the plaintiffs' right to file another bill."

No other bill appears to have been filed. These minutes do not show who were complainants in that suit with Allen Jones Davie, or to what deeds the order of 1840 referred. Not long after that litigation, Allen Jones Davie removed from the vicinity of the mines to Hillsboro', N. C., and subsequently to South Carolina.

In 1848, McCulloch, for the consideration of $2,000, made a quitclaim deed to John Gluyas for the undivided third of the land conveyed to him by F. W. Davie in the year 1831. In the same year, Hyder A. Davie died, having by his last will devised and bequeathed to F. W. Davie, L. A. Beckham, and W. F. Desarre his whole estate, real and personal, in trust for the sole and separate use of his daughter, Mrs. Bedon. On the 2d of March, 1850, F. W. Davie made two deeds (which were duly recorded on the same day) to Beckham, one to him individually, for an undivided third of the land for the expressed consideration of $2,000, and the other to him for an undivided third of the same land, in trust for Mrs. Bedon, the consideration therefor, as recited, being $3,000, previously paid to the grantor by Hyder A. Davie. Within a few weeks after the making of these two last deeds, F. W. Davie died at his home in South Carolina. On 9th April, 1850 (whether F. W. Davie was then alive

does not appear), Beckham leased an undivided two-thirds of the tract to Briggs for the term of five years, and the latter, on June 12, 1850, assigned that lease to John Peters and M. L. Holmes. During the succeeding year, Allen Jones Davie started for California by the overland route, and was never heard from after he had reached in his journey the hostile Indian Territory. In 1852, John Gluyas conveyed, by quitclaim deed, to John Peters and M. L. Holmes the undivided one-third which he had previously acquired from McCulloch; and in 1853 M. L. Holmes conveyed to R. J. Holmes one-eighteenth of the part purchased from Gluyas and a one-sixth interest in the lease taken by Holmes and Peters from Briggs. Under the foregoing deeds and leases, Peters, Sloan, & Co., for a time, worked the mines; and in June, 1853, they joined with Beckham in selling and conveying the property by separate deeds to the Belmont Mining Company, at the price of $125,000, which was paid to Peters, Sloan, & Co. Of that sum, it was agreed between the parties selling that Peters, Sloan, & Co. were entitled to $81,666.66, while Beckham, in his individual right and as trustee for Mrs. Bedon, was entitled to receive $43,333.33. Before this transaction, however, was consummated by a division of the funds among the respective parties, a written notice, dated July 23, 1853, signed by the attorney of "Cadwalader Jones and the heirs of Allen Jones Davie, deceased," was served upon Peters, Sloan, & Co., to the effect that "one-third of the purchase-money for which the McCulloch mine in the county of Guilford has lately been sold is claimed by Colonel Cadwalader Jones, as trustee, for the use and benefit of the children and heirs-at-law of Allen J. Davie, by a deed from F. W. Davie, bearing date the 15th January, 1833." They were, by that notice, "requested and notified to retain one-third of said money" in their hands "for the use of said heirs, and not to pay out said third to any person or persons without the consent of Col. C. Jones." This notice induced Peters, Sloan, & Co. to suspend any final settlement and division with Beckham. In the fall of 1853, it seems that Cadwalader Jones, Jr., a son of the trustee named in the deed of Jan. 15, 1833, was employed by the latter, and by William R. Davie, to establish the claim of the heirs of Allen Jones Davie to said land and mines. After his

employment, Cadwalader Jones, Jr., appears to have had some negotiations with Beckham, which resulted in the latter's executing, in the presence of Sloan, of Peters, Sloan, & Co., and Cadwalader Jones, Jr., a paper, of which the following is a copy: —

"STATE OF NORTH CAROLINA, *Guilford County:*

"Whereas Peters, Sloan, & Co. held one-third of the McCulloch gold-mine in Guilford County, under John Gluyas, Charles McCulloch, and William F. Davie, and whereas they had a lease from Lewis A. Beckham in his own right, and as trustee of Mrs. Julia Bedon, for two-thirds of said mine for a period the lease will show;

"Whereas said Peters, Sloan, & Co. worked the said mine for some year or two, and paid one-seventh of the two-thirds of all the gold extracted whilst they worked the mine to said Lewis A. Beckham for himself, and as trustee aforesaid;

"Whereas Peters, Sloan, & Co. sold their interest in said mine for $82,333.33;

"Whereas Lewis A. Beckham sold his interest in said mine for $21,333.33, and his interest as trustee aforesaid for the same sum;

"Whereas Col. Cad. Jones, of Hillsboro', as trustee, claiming the one-third of said mine as trustee for Allen J. Davie, wife and children, as he alleges under a deed from William F. Davie;

"Whereas James Sloan, one of the firm of Peters, Sloan, & Co., collected for Lewis A. Beckham his part and the part of Julia Bedon, to wit, $41,666.66;

"Whereas it is the wish of all the parties for the said several parties to receive the said several purchases without prejudice to the legal or equitable claim of Col. Cad. Jones;

"It is agreed that whatever claim the said Cad. Jones had in said gold-mine he shall have against the several parties who have sold and received the purchase-money instead of the land itself. And the said Lewis A. Beckham hereby agrees to acknowledge service of any bill in equity which the said Cad. Jones and his *cestui que trust* may in equity file against himself or against himself and others in Guilford County, North Carolina, waiving all questions as to jurisdiction, to settle any and all questions of title and right the said Cad. Jones, trustee, or his *cestui que trust*, have or may have for the said purchase-money, or the rents and profits received whilst he had any thing to do with the said mines.

(Signed) "L. A. BECKHAM.

"APRIL 28, 1854."

Beckham died in 1860 or 1861. His estate was insolvent. In July, 1874, this suit was instituted for the purpose of either obtaining a partition of the land or a portion of the proceeds of the sale. In the progress of the suit the complainants elected to claim an interest in the proceeds of the sale. Among the defendants are the Belmont Mining Company, James Sloan, M. L. Holmes, and R. J. Holmes, whom the complainants seek to hold liable for their alleged interest in the proceeds of sale. Upon final hearing the bill was dismissed, and the complainants appealed.

The cause was argued by *Mr. James Lowndes* and *Mr. Edward McCrady, Jr.*, for the appellants, and by *Mr. Samuel F. Phillips* for the appellees.

MR. JUSTICE HARLAN, after stating the case, delivered the opinion of the court.

The appellants, as the heirs-at-law of Allen Jones Davie, deceased, assert an interest in the proceeds of a sale which took place in June, 1858, of a tract of land in Guilford County, North Carolina, known many years ago as the McCulloch gold-mine.

Whether the defence, so far as it rests upon the Statute of Limitations of North Carolina, can be sustained, depends upon the evidence as to the time when Allen Jones Davie died. The learned counsel for appellants insist that, consistently with the legal presumption of death after the expiration of seven years, without Allen Jones Davie being heard from by his family and neighbors, the date of such death should not be fixed earlier than the year 1858. In that view, — excluding from the computation of time the war and reconstruction period between Sept. 1, 1861, and Jan. 1, 1870, as required by the statutes of North Carolina (*Johnson* v. *Winslow*, 63 N. C. 552), — the suit, it is contended, would not be barred by limitation. The general rule undoubtedly is, that "a person shown not to have been heard of for seven years by those (if any) who, if he had been alive, would naturally have heard of him, is presumed to be dead, unless the circumstances of the case are such as to account for his not being heard of without assuming his death." Stephen, Law of Evid., c. 14, art. 99; 1 Greenl. Evid.,

sect. 41; 1 Taylor, Evid., sect. 157, and authorities cited by each author. But that presumption is not conclusive, nor is it to be rigidly observed without regard to accompanying circumstances which may show that death in fact occurred within the seven years. If it appears in evidence that the absent person, within the seven years, encountered some specific peril, or within that period came within the range of some impending or immediate danger, which might reasonably be expected to destroy life, the court or jury may infer that life ceased before the expiration of the seven years. Mr. Taylor, in the first volume of his Treatise on the Law of Evidence (sect. 157), says, that "although a person who has not been heard of for seven years is presumed to be dead, the law raises no presumption as to the time of his death; and, therefore, if any one has to establish the precise period during those seven years at which such person died, he must do so by evidence, and can neither rely, on the one hand, on the presumption of death, nor, on the other, upon the presumption of the continuance of life." These views are in harmony with the settled law of the English courts. *In Re Phene's Trust*, Law Rep. 5 Ch. 139; *Hopewell* v. *De Pinna*, 2 Camp. N. P. 113; *Reg.* v. *Lumley*, Law Rep. 1 C. C. 196; *Re Lewes's Trusts*, Law Rep. 11 Eq. 236; 32 Law J. Ch. 104; 40 id. 507; 29 id. 286; 37 id. 265. In the leading case in the Court of Exchequer of *Nepean* v. *Doe dem. Knight* (2 Mee. & W. 894), in error from the Court of King's Bench, Lord Denman, C. J., said: "We adopt the doctrine of the Court of King's Bench, that the presumption of law relates only to the fact of death, and that the time of death, whenever it is material, must be a subject of distinct proof." To the same effect are Mr. Greenleaf and the preponderance of authority in this country. 1 Greenl. Evid., sect. 41; *Montgomery* v. *Bevans*, 1 Sawyer, 653; *Stevens* v. *McNamara*, 36 Me. 176; *Smith* v. *Knowlton*, 11 N. H. 191; *Flynn* v. *Coffee*, 12 Allen (Mass.), 133; *Luing* v. *Steinman*, 1 Metc. (Mass.) 204; *McDowell* v. *Simpson*, 1 Houst. (Del.) 467; *Whiting* v. *Nicholl*, 46 Ill. 230; *Spurr* v. *Trumble*, 1 A. K. Mar. (Ky.) 278; *Doe ex dem. Cofer* v. *Flanagan*, 1 Ga. 538; *Smith* v. *Smith*, 49 Ala. 156; *Prim* v. *Stewart*, 7 Tex. 178; *Gibbes* v. *Vincent*, 11 Rich. (S. C.) 823; *Hancock* v. *American Life Insurance Co.*, 62 Mo. 26, 121; *Stouvenal* v.

Sepkins, 2 Daly (N. Y.), 319; *McCartee* v. *Camee*, 1 Barb. (N. Y.) Ch. 456. And such seems to be the settled doctrine in North Carolina. In *Spencer* v. *Moore* (11 Ired. 160), the Chief Justice of the Supreme Court of that State said: "The rule as to the presumption of death is, that it arises from the absence of the person from his domicile without being heard from for seven years. But it seems rather to be the current of the authorities that the presumption is only that the person is then dead, namely, at the end of seven years; but that the presumption does not extend to the death having occurred at the end, or any other particular time within that period, and leaves it to be judged of as a matter of fact according to the circumstances, which may tend to satisfy the mind, that it was at an earlier or later day." The question again arose in the subsequent case of *Spencer* v. *Roper* (13 id. 333, 334), when that court reaffirmed *Spencer* v. *Moore*, and, referring with approval to the doctrine announced by the Court of King's Bench in *Doe dem. Knight* v. *Nepean* (5 Barn. & Adol. 86, same case as 2 Mees. & W. 894, *supra*), said: "Where a party has been absent seven years without having been heard of, the only presumption arising is that he is then dead, — there is none as to the time of his death."

We therefore follow the established law when we inquire whether, according to the evidence, Allen Jones Davie died at an earlier date than at the end or expiration of the seven years when the legal presumption of his death arose. It seems to us that, upon the showing made by the complainants themselves, the conclusion is inevitable that he died some time during the year 1851. As early as July 28, 1853, a written notice was given to Peters, Sloan, & Co., in which they were advised that Colonel Cadwalader Jones and the children of Allen Jones Davie claimed an interest in the proceeds of the sale made by them and Beckham in June, 1853, to the Belmont Mining Company. That notice was signed by "Ralph Gorrill, sol'r of C. Jones *and the heirs of A. J. Davie dec'd.*" The notice is produced and relied upon by the complainants in support of their claim.

Further, in the seventh paragraph of the complainants' bill they say, "That the said Allen Jones Davie departed this life,

as it is believed, some time in the year 1851, but the precise date of his death is not known, nor can any direct proof be obtained, nothing having been heard from him since the —— day of November, 1851, when some of a party with whom he had undertaken a journey by land to California, through the country of hostile Indians, returned, saying that the party had been some time fighting the Indians when they left, but that said Allen Jones Davie, with the rest of the party, resolved to press on and fight their way across the country, in which struggle it is believed that he, with the rest of the party, perished, as none of them have ever been heard of since." Again, in the deposition of Cadwalader Jones, Jr., we find this language: "As to Allen Jones Davie, the precise time of his death has never been ascertained, but he perished (it is supposed) in the Indian Territory, April or January, in the year 1851, and has never been heard of since." But this is not all the evidence in the record upon this point. In a statement of "admitted facts," filed in the cause, we find the following: "That the time of the death of Allen Jones Davie is not known, but his death is supposed to have happened late in the fall of 1851, say 1st December, since which time he has not been heard from."

In view of this evidence, we cannot accept as absolutely controlling the legal presumption which, in regard to Allen J. Davie's death, arose at the expiration of seven years from the time when he was last heard from. We cannot determine the rights of the parties upon the hypothesis that his death occurred in the year 1858, when the appellants themselves and their chief witnesses not only unite in declaring their belief that he died in 1851, but state facts which fully justify that belief. Concluding then, as we must, that he died in the year 1851, it seems clear that the claim set up in the bill to an interest in the proceeds of the sale of June, 1853, is barred by the limitation of three years prescribed by the North Carolina statute; and it does not appear that any of the complainants are protected by the savings made in the statute for the benefit of infants and *femes covert*.

But it is contended that, in view of the absence of the appellants from North Carolina for many years prior to the sale of 1853, and their continuous absence since that date,

their rights are protected by the saving in the North Carolina statute in favor of persons who, having causes of action, were "beyond the seas" when they accrued.

We are not unaware of the construction which this court has in several decisions placed upon the phrase "beyond the seas," as used in statutes of limitation. In *Faw* v. *Roberdeau* (3 Cranch, 173), this court, in considering the meaning of the words "out of this Commonwealth," as employed in a Virginia statute of limitations, said: "Beyond sea and out of the State are analogous expressions, and are to have the same construction." In *Murray's Lessee* v. *Baker et al.* (3 Wheat. 541), involving the construction of a Georgia statute of limitation, this court held that the words "beyond the seas" must be held to be equivalent to "without the limits of the State." In *Bank of Alexandria* v. *Dyer* (14 Pet. 141), the same views were expressed as to a Maryland statute of limitations. While the court in that case approved the interpretation of the words "beyond the seas" as given in previous decisions, it said that its construction was in harmony with the uniform decisions of the courts of Maryland. In *Shelby* v. *Guy* (11 Pet. 366), the court was required to interpret the same words in a statute of limitation which was in force in Tennessee before its separation from North Carolina. Mr. Justice Johnson, in his opinion, remarked that it was neither sensible nor reasonable to construe these words according to their literal signification. Upon the suggestion, however, that a contrary decision had then recently been made in Tennessee, the court withheld any positive declaration upon the point, in the hope that the courts of the State would, in due time, furnish such lights upon its settled law as would enable this court to come to a satisfactory conclusion upon the question. The court at the same time decided, as they had previously done in *Green* v. *Lessee of Neal* (6 Pet. 291), and as they subsequently did in *Harpending* v. *The Dutch Church* (16 Pet. 455), and *Leffingwell* v. *Warren* (2 Black, 599), that the fixed and received construction by the State courts of local statutes of limitation furnishes rules of decision for this court, so far as such construction and statutes do not conflict with the Constitution of the United States.

Guided by the doctrines of these cases, let us inquire

whether the phrase "beyond the seas," used in the statutes of North Carolina, has received a fixed construction in the courts of that State. As early as 1811, in the case of *Whitlock* v. *Walton* (2 Murph. 23, 24), the Supreme Court of North Carolina construed the words "beyond the seas," which were used in the Statute of Limitations of 1715. It was there claimed that a citizen of Virginia, who had a cause of action against a citizen of North Carolina, but who failed to sue within the period fixed by the statutes, was within the saving made for the benefit of those "beyond the seas." But the Supreme Court of that State said: "The plaintiff is certainly not within the words of the proviso, and it does not appear to the court that he falls within the true meaning and spirit of it. Great is the intercourse between the citizens of this State and the citizens of other States, particularly adjoining States; and if suits were permitted to be brought on that account against our own citizens, at any distance of time, by citizens of other States, the mischief would be great." That case was approved in *Earle* v. *Dickson* (1 Dev. 16), decided in 1826. We have been referred to no later case in that court which, in any respect, modifies these decisions. Consequently, our duty is, without reference to our former decisions, to adopt, in this case, the construction which the Supreme Court of North Carolina has given to the limitation statute of that State. In so doing, we pursue the precise course marked out in the case of *Green* v. *Lessee of Neal* (*supra*), where this court said: "In the case of *Murray's Lessee* v. *Baker*, *&c.* (3 Wheat. 541), this court decided that the expressions 'beyond seas' and 'out of the State' are analogous, and are to have the same construction. But suppose the same question should be brought before this court from a State where the construction of the same words had been long settled to mean literally 'beyond seas,' would not this court conform to it?" The question was answered by saying that "an adherence by the Federal courts to the exposition of the local law, as given by the courts of the State, will greatly tend to preserve harmony in the exercise of the judicial power in the State and Federal tribunals." *Supervisors* v. *United States*, 18 Wall. 82; *Suydam* v. *Williamson*, 24 How. 427.

It results that the absence of the complainants from the State of North Carolina, but within the United States, does not bring them within the saving made for persons "beyond the seas."

But upon this branch of the case we are met with the additional argument against the application of the Statute of Limitations, that this is a case of an express trust, and therefore it is not embraced by the statute. This trust is alleged to have been created by the writing which Beckham executed on the 23d of July, 1854. But we do not assent to any such construction of that writing, nor do we perceive any thing in the conduct of the parties which raises a trust even by implication. As was well said by the district judge, "No trust can arise by implication from the circumstances of the transaction, as the defendants assumed no new obligation, or in any way recognized the rights of the plaintiffs to the fund derived from the sale of the land. The defendants held these funds adversely, as they formerly held the lands. They only agreed that if the plaintiffs could show, in a court of equity, that they were entitled to any relief against the defendants as the former holders of the land, the same relief should be had against them as the holders of the proceeds of the land." It is clear, from all the evidence, that no such relations were created between the parties, by the transactions of 1853 and 1854, as suspended or stopped the running of the Statute of Limitations, and the suit seems to be barred.

But independently of the conclusion reached upon the question of limitation, there is another view which, in our opinion, equally precludes all relief to the complainants. It is not at all satisfactorily shown that F. W. Davie ever delivered as his act and deed the conveyance of Jan. 15, 1833. The presumption is very strong that he did not. It may be inferred that the original purchase from Teague was made in deference to the wishes, or upon the suggestion, of Allen Jones Davie, whose estimate of the value of the gold under Teague's land was so extravagant that he expressed his belief of its sufficiency to pay the debt of England. The intention of F. W. Davie, perhaps, was at some future time, and when his judgment approved that course, to give his brother, who was of a restless,

speculative disposition, an interest in the land. It was, doubtless, in preparation for the execution of that purpose that an original deed was prepared and signed by him, containing the terms, conditions, and trusts described in the bill, and of which the paper produced is satisfactorily shown to be a correct copy. But no witness proves that he ever delivered the original to Allen Jones Davie, or to any member of his immediate family, or to Colonel Jones, the designated trustee. If the deed which C. Jones, Jr., refers to is the same original, certainly his testimony falls far short of proving that it was ever in the possession of Allen Jones Davie. That witness states nothing more than his "impression" that he saw the deed in the possession of Allen Jones Davie while the latter lived in Hillsboro', N. C. But he cannot remember its contents. Nor does he state in what year he saw it, or that he recognized the genuine signature of F. W. Davie to the deed. The original, of which the one filed is a copy, was certainly in the possession of William R. Davie, a son of Allen Jones Davie, some time after the death of F. W. Davie. But where, from whom, or when he obtained it does not appear. It is not proven that he obtained it in the lifetime of F. W. Davie. It is consistent with the proof, and is not a violent presumption, that it was found among the papers of F. W. Davie after his death. There is no competent evidence that any one ever saw it in the hands of Allen Jones Davie, or that F. W. Davie, in his lifetime, in any form, recognized the right of his brother, or of the trustee, Jones, to its possession. Nor is it shown that the alleged trustee was aware, until after the death of F. W. Davie, of the trust intended to be conferred upon him, when the deed should be delivered.

The loose minutes on the trial docket of the case of Allen J. Davie and others against McCulloch furnish no evidence that Allen Jones Davie, during that litigation, had any such deed, or claimed any right under it. The reasonable construction of the order made, in that case, in the year 1840, is that the suit was dismissed because he could not produce any such deed; and if he could not produce it, it must have been because F. W. Davie still had it in his possession, and had not delivered it to his brother. From 1840, down to his leaving for California,

Allen Jones Davie did not seem to have any connection with the mines, and no one proves any act or assumption of owner ship, upon his part, during that period. In view of the great value which, at one time, he placed upon this property, we cannot suppose, had the deed been in his custody or under his control at any time before starting on a perilous overland journey to California, that he would have left without either putting it upon record, or asserting his claim to the land in some distinct form, or protesting against the absolute sale to Beckham by F. W. Davie. More than a year before he departed for California, his brother had sold and conveyed to Beckham, by deed, promptly placed upon record, the identical interest in the land which the appellants claim had been, in 1833, effectively conveyed to their ancestor. If, when the conveyance to Beckham was made, F. W. Davie had not delivered the signed deed of 1833, his determination in 1850 not to make such delivery, but to sell the land to Beckham, cannot be questioned by plaintiffs in error. Allen Jones Davie had not, so far as the record shows, paid any thing for an interest in the land, either in money or services. The copy of the original deed which is produced recites no consideration except one dollar in hand paid; and while the record does not furnish an explanation of his change of purpose, it is clear that F. W. Davie was under no legal obligation which prevented him, in 1850, from selling the land, and withholding from his brother the delivery of the deed of 1833. So far as the record speaks, it appears to be a case of an unexecuted gift by F. W. Davie to his brother. His whole conduct for many years prior to his death is altogether inconsistent with the hypothesis that he had at any time, prior to his sale to Beckham, consummated the gift by delivering the deed to his brother. The conclusions we have expressed are much strengthened by what occurred after the sale to the Belmont Mining Company in June, 1858. In the fall of that year, C. Jones, Sen., in conjunction with William R. Davie, a son of Allen Jones Davie, employed C. Jones, Jr., an attorney and a kinsman of the latter, to establish the claim of the trustee and the children of Allen Jones Davie to the land, or to an interest in the proceeds of its sale. C. Jones, Jr., admits that he entered diligently upon the discharge of this duty. He was cognizant, because

he was present at the execution, of Beckham's agreement of April 28, 1854, whereby it was stipulated that the trustee and *cestui que trust* might assert, through legal proceedings, any claim they had in the proceeds of the sale of the land, and wherein Beckham agreed to appear to any suit in equity instituted for such purpose, waiving all question of jurisdiction. Although Cadwalader Jones, Sen., lived within about sixty miles of the land for many years after the sale of June, 1853, no such proceedings were instituted until this suit was commenced in 1874, twenty-four years after the death of F. W. Davie, and twenty-one years after the sale to the Belmont Mining Company by his grantees, whose deeds were duly recorded. This great lapse of time since the sale of 1853, without an assertion, in some form of legal procedure, of the rights now claimed, is persuasive evidence that the persons who examined into the facts, when they were fresh in the minds of living witnesses, reached the conclusion that the deed of January, 1833, had never been delivered by F. W. Davie, and that therefore neither the trustee nor the children and heirs of Allen Jones Davie acquired any rights thereunder.

Upon the whole case we are satisfied that the decree dismissing the bill was right, and should be affirmed. It is

So ordered.

STACEY v. EMERY.

A., a collector of internal revenue, seized certain whiskey belonging to B., for the condemnation and forfeiture whereof proceedings were afterwards, at the suit of the United States, brought in the proper court. The court rendered a judgment dismissing them; and, "it appearing that the seizure, though improperly made, was made by his superior officer, the supervisor," ordered that a certificate of probable cause be issued to A. B. brought trespass against the supervisor. *Held*, 1. That the certificate was a bar to the suit. 2. That the motive of the court for granting it makes no part of the record, and should not have been recited therein.

ERROR to the Circuit Court of the United States for the Middle District of Tennessee.

The facts are stated in the opinion of the court.

Mr. Robert McPhail Smith for the plaintiff in error.
Mr. Assistant-Attorney-General Smith, contra.

MR. JUSTICE HUNT delivered the opinion of the court.

Emery, a supervisor of internal revenue, was sued by Stacey for causing the seizure of a quantity of whiskey belonging to him, which had been libelled by the collector of internal revenue, under Emery's direction, and subsequently released, on dismissing the proceedings against it.

That judgment and the accompanying order are in the words following: "It is, therefore, considered by the court that the information in this cause be dismissed, and that the delivery bond given by the claimant for the property seized in this cause be discharged. It is further ordered by the court that the cost be certified to the proper accounting officers for payment, and that a certificate of probable cause of seizure be issued to W. D. Peabody, collector, it appearing that the seizure, although improperly made, was made by his superior officer, the supervisor."

Emery justified as supervisor, and upon demurrer to his pleas setting up the certificate of probable cause, as above set forth, judgment was given in his favor.

Stacey then sued out this writ of error, which is based on the ground that the certificate is no protection to Emery.

It is contended that the certificate protects the collector, on the sole ground that he acted as a ministerial officer, in obedience to the orders of his superior, and that the granting of the certificate in this form implies that the seizure was made without probable cause. These facts, it is said, determine conclusively that the seizure was wrongfully made, and that the defendant was a trespasser in making it. *Gelston et al.* v. *Hoyt*, 3 Wheat. 246; *The Apollon*, 9 Wheat. 362.

The defendant must and does base his exemption from liability for an unauthorized seizure of the plaintiff's goods upon the act of March 2, 1799 (1 Stat. 696, sect. 89), which provides as follows: "When any prosecution shall be commenced on account of the seizure of any ship or vessel, goods, wares, or merchandise, and judgment shall be given for the claimant or claimants, if it shall appear to the court before whom such

prosecution shall be tried that there was a reasonable cause of seizure, the said court shall cause a proper certificate or entry to be made thereof; and in such case the claimant or claimants shall not be entitled to costs, nor shall the person who made the seizure, or the prosecutor, be liable to action, suit, or judgment on account of such seizure or prosecution."

Under this act, if it appeared to the court that there was a reasonable cause of seizure, it was its duty to cause a proper certificate to be made thereof. This was its sole duty in this respect, and its decision is conclusive. The reason entitling the defendant to exemption, or the motive for granting the certificate, makes no part of the record, and should not be recited therein. If the prosecutor had called together a jury of twelve good men prior to the seizure, and had taken their judgment whether the goods were liable to seizure, and had acted upon it, this circumstance should have found no place in the record. Its recital would have been surplusage simply.

So when the court states as a reason for granting a certificate of probable cause of seizure by the collector, that the seizure was made by the direction of his superior officer, this statement is irrelevant and superfluous. The certificate of probable cause is all there is of it. The residue of the sentence is out of the case. The unusual form of the certificate should work no prejudice to the rights of the defendant.

The act we have cited provides that, when such certificate shall be made, neither the party making the seizure nor the prosecutor shall be liable to action on account of such seizure or prosecution. The collector who made the seizure has been certified not to be liable, and the present defendant, the party directing the seizure, — that is, the prosecutor, — is equally entitled to exemption.

Generally, it is the duty of the district attorney of the United States to prosecute for all violations of the customs revenue laws, or the internal revenue laws of the country. Rev. Stat., sect. 838. No doubt he falls within the protection of this statute of 1799, as does the collector of customs, who is expressly authorized by the act of 1796 to direct actions to be commenced to recover the penalties for the violations in that act specified.

Supervisors of internal revenue are authorized to be appointed

by the act of July 20, 1868. 15 Stat. 148, 144. It was made a part of their duty "to see that all laws and regulations relating to the collection of internal taxes are faithfully executed and complied with, to aid in the prevention, detection, and punishment of any frauds in relation thereto."

It was in the discharge of this duty to see that the laws were faithfully executed, and to aid in the detection and punishment of frauds, that the defendant gave the direction complained of.

We are of the opinion that this officer, equally with the district attorney and customs collector, is entitled to the protection given by the act of 1799.

The complaint alleges that the seizure of the goods was illegal, and wrongful and malicious, and it is now contended that a certificate of probable cause affords no protection where the seizure is malicious.

This is an error. The question of malice or of good faith is not an element in the case. It is not a question of motive. If the facts and circumstances before the officer are such as to warrant a man of prudence and caution in believing that the offence has been committed, it is sufficient. Whether the officer seized the occasion to do an act which would injure another, or whether he moved reluctantly, is quite immaterial.

Mr. Justice Washington says, in *Munn* v. *Dupont*, 8 Wash. 87: "If malice is proved, yet if probable cause exists, there is no liability. Malice and want of probable cause must both exist," to justify an action. He then defines probable cause in these words: "A reasonable ground of suspicion, supported by circumstances sufficiently strong in themselves to warrant a cautious man in the belief that the party is guilty of the offence with which he is charged."

Chief Justice Shaw defines it in similar language: "Such a state of facts as would lead a man of ordinary caution to believe, or to entertain an honest and strong suspicion, that the person is guilty." *Ulmer* v. *Leland*, 1 Me. 135.

In *Forhay* v. *Ferguson* (2 Den. (N. Y.) 617), the rule is laid down by Bronson, C. J., in the same language, with this addition: "And such cause will afford a defence to a malicious prosecution, however innocent the plaintiff may be." In that case, there was evidence to justify a finding that the prosecu-

tion had been from a bad motive. This rule is so clear, that it is not necessary to multiply authorities.

In the case before us, the certificate was of "probable cause of seizure."

The authorities we have cited speak of "probable" cause. The statute of 1799, however, uses the words "reasonable cause of seizure." No argument is made that there is a substantial difference in the meaning of these expressions, and we think there is none. If there was a probable cause of seizure, there was a reasonable cause. If there was a reasonable cause of seizure, there was a probable cause. In many of these reported cases the two expressions are used as meaning the same thing: *Talbot* v. *Seeman*, 1 Cranch, 1; *Carrington and Others* v. *Merchants' Insurance Co.*, 8 Pet. 495; *United States* v. *Riddle*, 5 Cranch, 311; *Sixty Pipes of Brandy*, 10 Wheat. 421; *United States* v. *The Recorder*, 2 Blatchf. 119. Although informal in this, as in the terms already referred to, we are of the opinion that the certificate is sufficient to protect a prosecutor, and that the defendant is to be ranked as of that class.

Judgment affirmed.

ROBERTSON v. CEASE.

1 Where the jurisdiction of a court of the United States depends upon the citizenship of the parties, such citizenship, and not simply their residence, must be shown by the record.

2 The ruling in *Railway Company* v. *Ramsey* (22 Wall. 322), approved in *Briggs* v. *Sperry* (95 U. S. 401), that such citizenship need not necessarily be averred in the pleadings, if it otherwise affirmatively appears by the record, does not apply to papers copied into the transcript which do not make a part of the record by bill of exceptions, or by an order of the court referring to them, or by some other mode recognized by law.

3. The presumption that a case is without the jurisdiction of the Circuit Court, remains now as it was before the adoption of the Fourteenth Amendment to the Constitution of the United States.

4. The defendant having made no objection in the court below to its jurisdiction, by reason of the non-averment of the citizenship of the plaintiff, this court, in reversing the judgment, grants leave to the latter to amend his declaration in respect to his citizenship at the commencement of the suit, if it be such as to authorize that court to proceed with the trial.

ERROR to the Circuit Court of the United States for the Western District of Texas.

The facts are stated in the opinion of the court.

Mr. Halbert E. Paine for the plaintiff in error.
Mr. Philip Phillips, contra.

MR. JUSTICE HARLAN delivered the opinion of the court.

This action was instituted on the 25th of September, 1873, by Cease, as the assignee of a note for $4,190, executed in Texas by Robertson, plaintiff in error, on the 2d of October, 1860, and made payable July 1, 1861, to the order of W. J. Chamblin, with interest at the rate of ten per cent per annum from date.

Does it sufficiently appear from the record that the case is within the jurisdiction of the Circuit Court? That is the first question to be considered upon this writ of error.

The payee, Chamblin, a citizen of Illinois, died in that State on the 29th of April, 1871. In September, 1873, the note sued on was assigned by his administrators to Cease. It appears from the pleadings that the heirs and administrators of Chamblin were also citizens of Illinois, both when the note was assigned to Cease and at the commencement of this action. It is also averred that Robertson, when sued, was a citizen of Texas, but there is no allegation as to the citizenship of Cease. The averment as to him is, that he "resides in the county of Mason and State of Illinois." It is, however, claimed by counsel to be apparent, or to be fairly inferred from certain documents or papers copied into the transcript, that Cease was, at the commencement of the action, a citizen of Illinois. One of those documents is a written notice, served by Robertson upon Cease's attorneys, that he would apply for a commission to examine as witnesses, in support of the plea in abatement, "Chamblin, Winn, and Henry Cease, citizens of the county of Mason, State of Illinois." The commission which issued, under that notice, from the clerk's office directed the examination of these witnesses, who are, in that document also, described as citizens of Illinois. The other document referred to is the deposition of Cease, which opens thus: "My name is Henry Cease; residence, Mason County, Illinois; age, 52 years; occupation, grain dealer and farmer."

It is the settled doctrine of this court that, in cases where the jurisdiction of the Federal courts depends upon the citizenship of the parties, the facts, essential to support that jurisdiction, must appear somewhere in the record. Said the Chief Justice, in *Railway Company* v. *Ramsey*, 22 Wall. 322: "They need not necessarily, however, be averred in the pleadings. It is sufficient if they are, in some form, affirmatively shown by the record." That view was approved in the subsequent case of *Briges* v. *Sperry*, 95 U. S. 401. Under the doctrine of these cases, it is contended that the citizenship of Cease in Illinois is satisfactorily shown by the foregoing documents, which, it is insisted, are a part of the record upon this writ of error. But this position cannot be maintained. It involves a misapprehension of our former decisions. When we declared that the record, other than the pleadings, may be referred to in this court, to ascertain the citizenship of parties, we alluded only to such portions of the transcript as properly constituted the record upon which we must base our final judgment, and not to papers which had been improperly inserted in the transcript. Those relied upon here to supply the absence of distinct averments in the pleadings as to the citizenship of Cease, clearly do not constitute any legitimate part of the record. They are not so made either by a bill of exceptions, or by any order of the court referring to them, or in any other mode recognized by the law. As there is nothing to show that the deposition of Cease, or the commission or notice under which it was taken, was before the jury or the court for any purpose, during the trial, no fact stated in them can be made the foundation of any decision we might render, either upon the merits or the question of jurisdiction. Looking, then, at the pleadings, and to such portions of the transcript as properly constitute the record, we find nothing beyond the naked averment of Cease's residence in Illinois, which, according to the uniform course of decisions in this court, is insufficient to show his citizenship in that State. Citizenship and residence, as often declared by this court, are not synonymous terms. *Parker et al.* v. *Overman*, 18 How. 137.

In the oral argument before this court, the inquiry arose, whether since the adoption of the Fourteenth Amendment to the

Federal Constitution the mere allegation of residence in Illinois did not make such a *prima facie* case of citizenship in that State as, in the absence of proof, should be deemed sufficient to sustain the jurisdiction of the Circuit Court. That amendment declares that "all persons born or naturalized in the United States, and subject to the jurisdiction thereof, are citizens of the United States, and of the State where they reside." It was suggested that a resident of one of the States is *prima facie* either a citizen of the United States or an alien, — if a citizen of the United States, and also a resident of one of the States, he is, by the terms of the Fourteenth Amendment, also a citizen of the State wherein he resides, — and if an alien, he was entitled in that capacity to sue in the Federal court, without regard to residence in any particular State. It is not to be denied that there is some force in these suggestions, but they do not convince us that it is either necessary or wise to modify the rules heretofore established by a long line of decisions upon the subject of the jurisdiction of the Federal courts. Those who think that the Fourteenth Amendment requires some modification of those rules, claim, not that the plaintiff's residence in a particular State necessarily or conclusively proves him to be a citizen of that State, within the meaning of the Constitution, but only that a general allegation of residence, without indicating the character of such residence, whether temporary or permanent, made a *prima facie* case of right to sue in the Federal courts. As the jurisdiction of the Circuit Court is limited in the sense that it has none except that conferred by the Constitution and laws of the United States, the presumption now, as well as before the adoption of the Fourteenth Amendment, is, that a cause is without its jurisdiction unless the contrary affirmatively appears. In cases where jurisdiction depends upon the citizenship of the parties, such citizenship, or the facts which in legal intendment constitute it, should be distinctly and positively averred in the pleadings, or they should appear affirmatively, and with equal distinctness, in other parts of the record. And so where jurisdiction depends upon the alienage of one of the parties. In *Brown* v. *Keene* (8 Pet. 115), Mr. Chief Justice Marshall said: "The decisions of this court require that the averment of jurisdiction shall be positive, that

the declaration shall state expressly the fact on which jurisdiction depends. It is not sufficient that jurisdiction may be inferred argumentatively from its averments." Here the only fact averred, or appearing from the record, is that Cease was a resident of Illinois; and we are, in effect, asked, in support of the jurisdiction of the court below, to infer argumentatively, from the mere allegation of "residence," that, if not an alien, he had a fixed permanent domicile in that State, and was a native or naturalized citizen of the United States, and subject to the jurisdiction thereof. By such argumentative inferences, it is contended that we should ascertain the fact, vital to the jurisdiction of the court, of his citizenship in some State other than that in which the suit was brought. We perceive nothing in either the language or policy of the Fourteenth Amendment which requires or justifies us in holding that the bare averment of the residence of the parties is sufficient, *prima facie*, to show jurisdiction. The judgment must, therefore, be reversed, upon the ground that it does not affirmatively appear from the record that the defendant in error was entitled to sue in the Circuit Court.

The plaintiff in error insists that the reversal should be with directions to dismiss the petition, since he contends that an amendment of the pleadings, stating the citizenship of Cease, would be, in legal effect, a new suit, asserting a new cause of action, which would be barred by the Statute of Limitations. But it is clear that an amendment of that nature could not be so regarded, either upon principle or authority. It would introduce no new cause of action. It would only show, if its allegations as to citizenship are true, that the court had jurisdiction, from the commencement of the litigation, of the cause of action set out in the original petition. Whether after such an amendment the action would be barred by limitation would depend upon the time which had elapsed before the filing of the original petition, and not upon the time which had elapsed previous to the amendment. The allowance of such an amendment, under the circumstances of this case, is sustained by the former practice of this court. In *Morgan's Ex'rs* v. *Gay* (19 Wall. 81), the judgment of the court below was reversed, because it did not affirmatively appear that the citizenship of the parties was

such as to give it jurisdiction; and the cause was sent back, "that amendment may be made in the pleadings, showing the citizenship of the indorser of the bills, if it be such as to give the court jurisdiction of the case." Such a course is peculiarly proper in this case, in view of the failure of the plaintiff in error to make, in the court below, the precise question of jurisdiction which he urges upon our consideration. He filed, it is true, a plea to the jurisdiction of the Circuit Court; but it did not impeach its jurisdiction upon the distinct ground that Cease did not appear to be a citizen of the State in which he resided. His denial of jurisdiction was upon the ground that the assignment to Cease was merely colorable, and for the fraudulent purpose of dispensing with letters of administration upon Chamblin's estate in Texas, thereby enabling a suit to be brought in the court below, in the name of the assignee, but really for the use and benefit of that estate. The parties, as we infer from the record, went to trial before the jury without any real controversy as to the citizenship of Cease being in Illinois. After verdict, Robertson moved in arrest of judgment, upon the general ground that there was "no cause of action stated in plaintiff's petition of which this court can take cognizance, and because it appears from the face of the pleadings that this court has no jurisdiction of the cause." But we cannot feel sure, from this general language, or from any thing in the record, that attention was called in the court below to the defect in the pleadings to which our attention has been specially directed. For these reasons the defendant in error should be allowed to amend the petition in respect to his citizenship at the commencement of the action, if his citizenship was then such as to authorize the court to proceed with the trial.

The assignment of errors embraces other questions, as to which we withhold any expression of opinion. Since the record shows no case of which the Circuit Court had jurisdiction, we do not feel at liberty, upon this writ of error, to determine any point affecting the merits of the litigation.

The judgment of the Circuit Court must, therefore, be reversed, with directions to grant a new trial, and for such further proceedings as may be in conformity to this opinion; and it is

So ordered.

BARNEY v. DOLPH.

After the passage of the act of July 17, 1854 (10 Stat. 306), amendatory of the act of Sept. 27, 1850 (9 id. 496), commonly known as the Donation Act, a husband and wife, who, by reason of their residence and cultivation, were, under the latter act, entitled to a patent from the United States for land in Oregon, could, before receiving such patent, sell and convey the land, so as to cut off the rights of his or of her children or heirs, in case of his or her death before the patent was actually issued.

ERROR to the Supreme Court of the State of Oregon.

Ejectment by Dolph against Barney, for certain land in Polk County, Oregon, on which John Waymire, a married man, settled, under sect. 4 of the Donation Act of Sept. 27, 1850 (9 Stat. 496), and which he and Clarissa his wife, after they had made and filed in the proper office the requisite final proof of settlement, continued residence, and cultivation, conveyed in fee by a quitclaim deed, bearing date Dec. 9, 1867, to one Riggs, under whom Dolph proved title.

Said Clarissa died before the issue of the patent. After its issue, said John executed a deed for the land to Barney, to whom, on the same day, Mary, a daughter of said John and Clarissa, also conveyed her interest in the land.

After Dolph had closed his case, Barney offered in evidence the deeds so executed to him; but upon Dolph's objection, the court excluded them, upon the ground that, by the deed to Riggs, said John and wife, then having full power of alienation, transferred the whole title to the land, and that no interest therein passed on her death to said John or said Mary. To this ruling Barney excepted. There was a verdict for Dolph; and the judgment rendered thereon by the Circuit Court for that county having been affirmed by the Supreme Court, Barney removed the case here, and assigns for error that the latter court erred in sustaining the ruling of the Circuit Court.

Mr. George H. Williams for the plaintiff in error.
Mr. J. H. Mitchell, contra.

MR. CHIEF JUSTICE WAITE delivered the opinion of the court.

The only question within our jurisdiction presented by this

record is, whether after a husband and wife had perfected their right to a patent for lands in Oregon, under the Donation Act of Sept. 27, 1850 (9 Stat. 496), and after the amendment of July 17, 1854 (10 id. 306), they could, before receiving the patent, sell and convey the lands so as to cut off the rights of the children or heirs of the husband or wife, in case of his or her death before the patent was actually issued.

This depends upon the effect to be given the original act, when construed in connection with the amendment. The original act, after providing for a grant to the husband and wife of six hundred and forty acres of land, one-half to the husband and one-half to the wife in her own right, declared that, "in all cases where such married persons have complied with the provisions of this (the) act, so as to entitle them to the grant as above provided, whether under the late provisional government of Oregon, or since, and either shall have died before patent issues, the survivor and children or heirs of the deceased shall be entitled to the share or interest of the deceased in equal proportions, except where the deceased shall otherwise dispose of it by testament, duly and properly executed according to the laws of Oregon;" and then "that all future contracts by any person or persons entitled to the benefit of this act, for the sale of the land to which he or they may be entitled under this act before he or they shall have received patent therefor, shall be void." The amendment of 1854 repealed this prohibition of sales.

The point to be decided is not whether, before the amendment, such a conveyance could have been made, or whether, if the conveyance had not been made, the children or heirs of a deceased husband or wife would take by descent or purchase, or whether the grant from the United States was one which took effect from the time of the passage of the act, or a subsequent entry and settlement, but whether, after the amendment, the husband and wife held by such a title that, before patent, but after their right to one had become absolute, they could sell and convey so as to vest in the purchaser either a legal or an equitable estate in fee-simple, — legal, if the title had already passed out of the United States by virtue of the act of Congress, and a full compliance with its provisions;

equitable, if the patent was needed to perfect the grant. The question is one of legislative intent, to be ascertained by examining the language which Congress has used, and applying it to the subject-matter of the legislation.

The reason of the exceptional policy of the United States in respect to the public lands in Oregon is to be found in the anomalous condition of the inhabitants of that Territory when the government of the United States exerted positively its jurisdiction over them. For more than thirty years, under the operation of treaty stipulations between the two countries (8 Stat. 249 and 360), the citizens of the United States and the subjects of Great Britain had been permitted to occupy jointly the territory afterwards included in that State. They had no government except such as they had organized "for the purposes of mutual protection and to secure peace and prosperity among" themselves. The actual condition of affairs is graphically described in *Lownsdale* v. *City of Portland* (Deady, 11), by the able and experienced judge of the district of Oregon, who has been connected with the administration of justice there for more than a quarter of a century, and was considered by this court in *Stark* v. *Starrs*, 6 Wall. 402, *Lamb* v. *Davenport*, 18 id. 307, and *Stark* v. *Starr*, 94 U. S. 477. As part of their plan of government, they established a "land law," by which free males over the age of eighteen years were permitted to occupy and hold six hundred and forty acres of land; and regulations were adopted for designating claims and protecting the occupants in their possession. While not denying to the United States the ownership of the soil, the occupants, to all intents and purposes, used and dealt with the lands they severally claimed as their own.

Finding this to be the condition of affairs, and recognizing the equitable claims of the inhabitants, Congress, within two years from the time of the organization of the territorial government, passed the Donation Act, which was framed so as to conform in a large degree to the regulations of the old system, and to grant to the original settlers holding under that system the whole, or a considerable portion, of the lands they had been occupying and cultivating. Sect. 4 was evidently intended for the special benefit of this class, and, stripped of details, in

effect granted to the white settlers then residing in the Territory, over eighteen years of age and citizens of the United States, or intending to become such, a half-section of land if single, or a whole section if married, — one-half to the husband and one-half to the wife, — provided they had resided upon and cultivated the land, or should do so, for four consecutive years, and otherwise conformed to the provisions of the act. Then follows, in this section, the provision which has already been cited in respect to the disposition of the property in case of the death of one of two married persons after they had complied with the provisions of the act and become entitled to a patent, but before the patent was actually received by them. The language used evidently confines this limitation in its effect to the married persons mentioned in this section.

Sect. 5 made provision for those coming into the Territory and settling after Dec. 1, 1850, and above the age of twenty-one years. It granted them, if single, one hundred and sixty acres, and if married, three hundred and twenty, — one-half to the husband and one-half to the wife, — upon the same conditions of residence, cultivation, and conformity to the act specified in sect. 4. Other sections required the settler, within three months after the survey of the lands had been made, or, if the survey had been made when the settlement commenced, within three months after the commencement of the settlement, to notify the surveyor-general of the precise tract he claimed, and within twelve months to prove to the satisfaction of the same officer that the settlement and cultivation required by the act had been commenced, specifying the time of the commencement. At any time after the expiration of four years from the date of the settlement, whether made under the laws of the late provisional government or not, the settler might prove to the surveyor-general the fact of the continued residence and cultivation required; and that being done, it became the duty of the surveyor-general to issue certificates, setting forth the facts of the case and specifying the land to which the parties were entitled, and to return the proofs taken to the Commissioner of the General Land-Office, when, if no valid objections were found, patents were to issue according to the certificate, upon the surrender thereof.

Sect. 8 provided that, upon the death of any settler before the expiration of the required four years' continued possession, all his rights should descend to his heirs, including the widow, where one was left, in equal parts, and that proof of compliance with the conditions of the act up to the time of the death should be sufficient to entitle them to a patent.

The prohibition of sales, although contained in sect. 4, applied to all persons entitled to the benefit of the act, and its repeal was, under the circumstances, equivalent to an express grant of power to sell. The prohibition was of the sale, before patent, of the land to which the settler was entitled under the act. The repeal, therefore, operated under the circumstances the same as a grant of power to sell the land even though a patent had not issued. This, in the absence of any thing to the contrary, implied the power to convey all the government had parted with.

When the right to a patent once became vested in a settler under the law, it was equivalent, so far as the government was concerned, to a patent actually issued. We so decided in *Stark* v. *Starrs*, 6 Wall. 402. The execution and delivery of the patent after the right to it is complete are the mere ministerial acts of the officer charged with that duty. An authorized sale by a settler, therefore, after his right to a patent had been fully secured, was, as to the government, a transfer of the ownership of the land.

We are thus brought to the consideration of the question, whether such a sale by married persons, entitled to the benefit of the fourth section of the act, would transfer to the purchaser the interest of the children, heirs, or devisees of a husband or wife, who died after the sale, but before the patent was actually received. This depends upon whether the repeal of the prohibition of sales was, in effect, the repeal of the provision in respect to the child, heir, or devisee, in cases where sales were made.

Repeals by implication are not favored; but if there is a positive and irreconcilable repugnancy between the old law and the new, the new must stand and the old fall, even though the result is reached by implication alone. After all, the question is one of legislative intent, to be ascertained

by an examination of both statutes, the rule being that the two are to stand, unless the contrary is manifested beyond a doubt.

As has been seen, the limitation is confined to such married persons as took under the fourth section of the act, where provision is made for those who, in the language of Judge Deady (Deady, 11), "had built towns, opened and improved farms, established churches and schools, and laid out highways," and who, when the United States assumed exclusive governmental control of the Territory, were found "engaged in agriculture, trade, commerce, and the mechanical arts." These, it may fairly be presumed, were special objects of the bounty of the government. The prohibition of sales was undoubtedly intended to protect the United States to some extent against fraudulent claims, and at the same time to place an obstacle in the way of an improvident disposition of their property by the settlers, under the influence of the new order of things; but at all times the husband or wife taking under sect. 4 could cut off a child or heir by will. The prohibition was in respect to sales, and the power to devise was expressly given this class of beneficiaries. It is clear, therefore, that the limitation was not intended altogether for the benefit of children or heirs.

The delay which necessarily attended the delivery of the patents, after settlers had become entitled to them under the law, oftentimes operated with great hardship upon those whom Congress intended to assist. In view of this, after the expiration of nearly four years from its enactment, when the government needed no more time for the detection of frauds, and the people had become accustomed to their change of circumstances, the prohibition of sales was removed, evidently in the interest of the settlers. After this, confessedly, all who had perfected their right to a patent for the lands they had occupied and cultivated for the requisite length of time, other than the married beneficiaries under sect. 4, could sell and convey to the purchaser an indefeasible estate; and there certainly does not seem to be any good reason why these special objects of regard should be made an exception to this general rule. It was a part of the original donation system to keep all the donated

lands from sale until the patents issued, but as soon as the patents were delivered all conditions were withdrawn and all restraints removed. When the settler, whether married or single, became an actual patentee, he could sell and convey in fee. The land was his own, to dispose of as he chose. All that prevented his doing so before, after his right to the patent had been perfected, was the prohibition of sale.

After this prohibition was taken away the system was radically changed, and a perfected right to a patent was made as good as the patent itself for all purposes except the mere convenience of proving title. A grant by Congress, under these circumstances, of the right to sell the land must have been intended to authorize those entitled to patents to convey in the same manner they could if the patent had been actually delivered. Any provision in the act transferring the title of the settler, in case of his death before receiving the patent, to his child, heir, or devisee, is palpably inconsistent with an unlimited power to sell and convey the land. The two cannot stand together, and consequently the power of sale, which was the latest enactment, must prevail. In this connection, it is worthy of remark that the devisee of the settler dying before patent is as much entitled to take under the law as a child or heir. Certainly it could never have been the intention of Congress to allow a settler to defeat a conveyance by a subsequent will. But if the child or heir could take, so must the devisee.

But there is still another argument in favor of the repeal, which is equally cogent. There cannot be a doubt that the great object of the law was to invest the early settlers of that territory with complete ownership of the land they had resided upon and cultivated, while the ownership of the soil was in controversy between the two sovereign claimants. The authority to sell before patent was an additional boon granted by the government. The retention of the original limitation in favor of the children, heirs, and devisees must necessarily affect materially the value of the title which could be conveyed. It operated against no one except married settlers residing in the country on or before Dec. 1, 1850. This would necessarily include those making their claims by reason of possession

taken under the provisional government, and it will not for a moment be presumed that this specially deserving class of settlers were alone to be incumbered by such a restriction on their title.

In conclusion, we hold that the conveyance by Waymire and wife, after they had secured the right to a patent, but before the patent had issued, passed the fee, or an equitable right to the fee, to their grantee, and consequently that there was no error in the court below.

Judgment affirmed.

FERTILIZING COMPANY v. HYDE PARK.

An act of the General Assembly of Illinois, approved March 8, 1867, incorporating the Northwestern Fertilizing Company, with continued succession and existence for the term of fifty years, authorized and empowered it to establish and maintain in Cook County, Illinois, at any point south of the dividing line between townships 37 and 38, chemical and other works, "for the purpose of manufacturing and converting dead animals and other animal matter into an agricultural fertilizer, and into other chemical products, by means of chemical, mechanical, and other processes," and to establish and maintain depots in the city of Chicago, in said county, "for the purpose of receiving and carrying off from and out of said city any and all offal, dead animals, and other animal matter which it might buy or own, or which might be delivered to it by the city authorities and other persons." The works, owned by the proprietors thereof before they were incorporated, were located within the designated territory, at a place then swampy and nearly uninhabited, but now forming a part of the village of Hyde Park; and the company established and maintained depots in Chicago. In March, 1869, the legislature passed an act revising the charter of that village, and granting to it the largest powers of police and local government; among them, to "define or abate nuisances which are, or may be, injurious to the public health," provided that the sanitary and police powers thereby conferred should not be exercised against the Northwestern Fertilizing Company in said village until the full expiration of two years from and after the passage of said act. Nov. 29, 1872, the village authorities adopted the following ordinance: "No person shall transfer, carry, haul, or convey any offal, dead animals, or other offensive or unwholesome matter or material, into or through the village of Hyde Park. Any person who shall be in charge of or employed upon any train or team carrying or conveying such matter or material into or through the village of Hyde Park shall be subject to a fine of not less than five nor more than fifty dollars for each offence;" and Jan. 8, 1873, caused the engineer and other employés of a railway company, which was engaged in carrying the offal from the city through the village to the chemical works, to be arrested

and tried for violating the ordinance. They were convicted, and fined fifty dollars each; whereupon the company filed this bill to restrain further prosecutions, and for general relief. *Held*, 1. That nothing passed by the charter of the company but what was granted in express terms or by necessary intendment. 2. That the charter, although, until revoked, a sufficient license, was not a contract guaranteeing that the company, notwithstanding its business might become a nuisance by reason of the growth of population around the place originally selected for its works, should for fifty years be exempt from the exercise of the police power of the State. 3. That the charter affords the company no protection from the enforcement of the ordinance.

ERROR to the Supreme Court of the State of Illinois.

The Northwestern Fertilizing Company, a corporation created by an act of the legislature of Illinois, approved March 8, 1867, filed its bill in equity to restrain the village of Hyde Park, in Cook County, Illinois, from enforcing the provisions of an ordinance of that village, which the company claims impairs the obligation of its charter. The bill also prayed for general relief. The Supreme Court of that State affirmed the decree of the Circuit Court of Cook County dismissing the bill; whereupon the company sued out this writ of error.

The charter of the company and the ordinance complained of are, with the facts which gave rise to the suit, set forth in the opinion of the court.

The case was argued by *Mr. Leonard Swett* for the plaintiff in error.

1. The charter confers upon the officers and agents of the company immunity from public prosecution for acts thereby authorized. *Trustees* v. *Utica*, 6 Barb. (N. Y.) 313; *Harris* v. *Thompson*, 9 id. 3; *People* v. *Law*, 34 id. 514; *Stoughton* v. *State*, 5 Wis. 297; *Niederhouse* v. *State*, 28 Ind. 258; 1 Hilliard, Torts, 550. The acts for the commission of which the railway employés were fined were, by the express terms of the charter, authorized. The company engaged them to transport the animal matter from its receiving depots in Chicago to the chemical works, which it had erected at a point confessedly within the limits designated. No other railroad touches at those works, and the company thus used the only means for promptly conveying from the city such matter to its rightful destination.

2. The charter, having been accepted by the company, is a contract with the State which the latter has no power to repeal,

impair, or alter. *Dartmouth College* v. *Woodward*, 4 Wheat. 518; *Armstadt et al.* v. *Illinois Central Railroad*, 31 Ill. 484; *Buffett et al.* v. *The Great Western Railroad*, id. 355; *State Bank of Ohio* v. *Knoop*, 16 How. 369; *Jefferson Branch Bank* v. *Skelly*, 1 Black, 436; *Bridge Proprietors* v. *Hoboken Company*, 1 Wall. 116; *The Binghamton Bridge*, 3 id. 51; *Home of the Friendless* v. *Rouse*, 8 id. 430; *Washington University* v. *Rouse*, id. 439.

3. Charters which suspend the exercise of the recognized sovereign powers of a State have, as contracts, been repeatedly sustained. Thus she may, for a consideration, bind herself not to tax a corporation; and a clause to that effect in a charter is a part of the contract, though it curtails, to that extent, her taxing power. The provision that no State shall pass a law impairing the obligation of contracts imposes a limitation not only upon that power, but upon all her legislation. *New Jersey* v. *Wilson*, 7 Cranch, 164; *State Bank of Ohio* v. *Knoop*, *supra*; *Home of the Friendless* v. *Rouse*, *supra*; *Washington University* v. *Rouse*, *supra*; *Atwater* v. *Woodbridge*, 6 Conn. 228; *Herrick* v. *Randolph*, 13 Vt. 525; *State Bank* v. *People*, 4 Scam. (Ill.) 303; *Illinois Central Railroad Co.* v. *McLean*, 17 Ill. 291; *The Binghamton Bridge*, *supra*; *Bridge Proprietors* v. *Hoboken Company*, *supra*; *Conway et al.* v. *Taylor's Ex'rs*, 1 Black, 603; *Costar* v. *Brush*, 25 Wend. (N. Y.) 630; *M'Roberts* v. *Washburn*, 10 Minn. 23; *Murray* v. *Charleston*, 96 U. S. 432.

4. The police power of the State was regarded by the court below as justifying the acts complained of, upon the hypothesis that all her grants are subject to an implied reservation of that power. There is no room here for such an implication. It is a contradiction in terms to say that an authority to carry on a particular business within designated limits for a specific period, which has been *expressly* granted by a binding contract, may be taken away at her pleasure, in the exercise of that power. Police regulations cannot be constitutionally enforced, if they conflict with the charter, or impair any of the essential rights which it confers. Cooley, Const. Lim. 557; *Washington Bridge Co.* v. *State*, 18 Conn. 53; *Pingrey* v. *Washburn*, 1 Aik. (Vt.) 264; *Miller* v. *New York & Erie Railway Co.*, 21

Barb. (N. Y.) 513; *People* v. *Jackson & Michigan Railroad Co.*, 9 Mich. 307; *People* v. *Platt*, 17 Johns. (N. Y.) 195; *Bailey* v. *Railroad Company*, 4 Harr. (Del.) 389; *Conway* v. *Taylor's Ex'rs*, *supra*; *State* v. *Neves*, 47 Me. 189; *State* v. *Jersey City*, 5 Dutch. (N. J.) 170.

A railroad which, without legislative authority, crosses a common highway, is a nuisance. Dillon, Mun. Corp., sect. 561. But when a charter conferring the right to construct such a road over or along a public highway is accepted, the company, if it operates its road with a due regard to the public safety and convenience, cannot be subjected by the State, in the pretended exercise of her police power, to penalties and forfeitures. A nuisance can be legalized; for the State may, for a limited time, surrender her police, as well as any other power. In this case she has done so for a valuable consideration, to secure a result of vital importance.

It was urged below that the charter is not violated by the ordinances, because the company may establish its works at some other point within the territory prescribed. To this there are two obvious answers. 1. The erection of the works is a compliance with the requirements of the charter, and entitles the company to exercise its franchise at the selected site. 2. It is gratuitously assumed that there are other suitable points to which means of rapid transit exist; but suppose there be, it may be safely predicted that, long before the expiration of the charter, the police power, if the decision below be now sustained, will be invoked, so as to render it impracticable for the company to carry on its business at any point, notwithstanding it may have invested capital in making preparation therefor.

5. If the public necessities demand that the franchise of the company shall be appropriated by the State, a proceeding condemning it in the exercise of the right of eminent domain, whereby an adequate compensation will be paid therefor, is the proper and only constitutional remedy. Cooley, Const. Lim. 556, and cases there cited; *Piscataqua Bridge* v. *New Hampshire Bridge*, 7 N. H. 35; *Central Bridge Corporation* v. *Lowell*, 4 Gray (Mass), 474; *West River Bridge* v. *Dix et al.*, 6 How 507; *Annington* v. *Barnett*, 15 Vt. 745; *Boston Water-Power*

Co. v. *Boston & Worcester Railroad*, 23 Pick. (Mass.) 360; *Boston & Lowell Railroad Co.* v. *Salem & Lowell Railroad Co.*, 2 Gray (Mass.), 1.

6. The right to equitable relief follows from the preceding propositions. *Boston & Lowell Railroad Co.* v. *Salem & Lowell Railroad Co.*, *supra*; *Craton Turnpike* v. *Kider*, 1 Johns. (N.Y.) Ch. 611; *Livingston* v. *Van Dusen*, 9 Johns. (N. Y.) 507; High, Injunctions, sect. 318, and cases cited.

Mr. Charles Hitchcock, contra.

MR. JUSTICE SWAYNE delivered the opinion of the court.

This case was brought here by a writ of error to the Supreme Court of the State of Illinois.

The alleged ground of our jurisdiction is, that the record presents a question of Federal jurisprudence. A brief statement of the facts will be sufficient for the purposes of this opinion.

The plaintiff in error was incorporated by an act of the legislature, approved March 8, 1867. The act declared that the corporation should "have continued succession and existence for the term of fifty years." The fourth and fifth sections are as follows: —

"SECT. 4. Said corporation is hereby authorized and empowered to establish and maintain chemical and other works at the place designated herein, for the purpose of manufacturing and converting dead animals and other animal matter into an agricultural fertilizer, and into other chemical products, by means of chemical, mechanical, and other processes.

"SECT. 5. Said chemical works shall be established in Cook County, Illinois, at any point south of the dividing line between townships 37 and 38. Said corporation may establish and maintain depots in the city of Chicago, in said county, for the purpose of receiving and carrying off, from and out of the said city, any and all offal, dead animals, and other animal matter, which they may buy or own, or which may be delivered to them by the city authorities and other persons."

The company organized pursuant to the charter. Its capital stock is $250,000, all of which has been paid up and invested in its business.

It owns ground and has its receiving depot about three miles from Chicago. The cost of both exceeded $15,000. Thither the offal arising from the slaughtering in the city was conveyed daily. The chemical works of the company are in Cook County, south of the dividing line of townships 37 and 38, as required by the charter. When put there, the country around was swampy and nearly uninhabited, giving little promise of further improvement. They are within the present limits of the village of Hyde Park. The offal procured by the company was transported from Chicago to its works through the village by the Pittsburg, Fort Wayne, and Chicago Railroad. There was no other railroad by which it could be done. The court below, in its opinion, said: —

"An examination of the evidence in this case clearly shows that this factory was an unendurable nuisance to the inhabitants for many miles around its location; that the stench was intolerable, producing nausea, discomfort, if not sickness, to the people; that it depreciated the value of property, and was a source of immense annoyance. It is, perhaps, as great a nuisance as could be found or even created; not affecting as many persons as if located in or nearer to the city, but as intense in its noisome effects as could be produced. And the transportation of this putrid animal matter through the streets of the village, as we infer from the evidence, was offensive in a high degree both to sight and smell."

This characterization is fully sustained by the testimony.

In March, 1869, the charter of the village was revised by the legislature, and the largest powers of police and local government were conferred. The trustees were expressly authorized to "define or abate nuisances which are, or may be, injurious to the public health," — to compel the owner of any grocery-cellar, tallow-chandler shop, soap factory, tannery, or other unwholesome place, to cleanse or abate such place, as might be necessary, and to regulate, prohibit, or license breweries, tanneries, packing-houses, butcher-shops, stock-yards, or establishments for steaming and rendering lard, tallow-offal, or other substances, and all establishments and places where any nauseous, offensive, or unwholesome business was carried on. The sixteenth section contains a proviso that the powers given

should not be exercised against the Northwestern Fertilizing Company until after two years from the passage of the act. This limitation was evidently a compromise by conflicting parties.

On the 5th of March, 1867, a prior act, giving substantially the same powers to the village, was approved and became a law. This act provided that nothing contained in it should be construed to authorize the officers of the village to interfere with parties engaged in transporting any animal matter from Chicago, or from manufacturing it into a fertilizer or other chemical product. The works here in question were in existence and in operation where they now are before the proprietors were incorporated.

After the last revision of the charter the municipality passed an ordinance whereby, among other things, it was declared that no person should transport any offal or other offensive or unwholesome matter through the village, and that any person employed upon any train or team conveying such matter should be liable to a fine of not less than five nor more than fifty dollars for each offence; and that no person should maintain or carry on any offensive or unwholesome business or establishment within the limits of the village, nor within one mile of those limits. Any person violating either of these provisions was subjected to a penalty of not less than fifty nor more than two hundred dollars for each offence, and to a like fine for each day the establishment or business should be continued after the first conviction.

After the adoption of this ordinance and the expiration of two years from the passage of the act of 1869, notice was given to the company, that, if it continued to transport offal through the village as before, the ordinance would be enforced. This having no effect, thereafter, on the 8th of January, 1873, the village authorities caused the engineer and other employés of the railway company, who were engaged in carrying the offal through the village, to be arrested and tried for violating the ordinance. They were convicted, and fined each fifty dollars. This bill was thereupon filed by the company. It prays that further prosecutions may be enjoined, and for general relief. The Supreme Court of the State, upon

appeal, dismissed the bill, and the company sued out this writ of error.

The plaintiff in error claims that it is protected by its charter from the enforcement against it of the ordinances complained of, and that its charter is a contract within the meaning of the contract clause of the Constitution of the United States. Whether this is so, is the question to be considered.

The rule of construction in this class of cases is that it shall be most strongly against the corporation. Every reasonable doubt is to be resolved adversely. Nothing is to be taken as conceded but what is given in unmistakable terms, or by an implication equally clear. The affirmative must be shown. Silence is negation, and doubt is fatal to the claim. This doctrine is vital to the public welfare. It is axiomatic in the jurisprudence of this court. It may be well to cite a few cases by way of illustration. In *Rector, &c. of Christ Church* v. *The County of Philadelphia* (24 How. 301), in *Tucker* v. *Ferguson* (22 Wall. 527), and in *West Wisconsin Railroad Co.* v. *Board of Supervisors* (93 U. S. 595), property had been expressly exempted for a time from taxation. Taxes were imposed contrary to the terms of the exemption in each case. The corporations objected. This court held that the promised forbearance was only a bounty or gratuity, and that there was no contract. In *The Providence Bank* v. *Billings & Pittman* (4 Pet. 515), the bank had been incorporated with the powers usually given to such institutions. The charter was silent as to taxation. The legislature imposed taxes. "The power to tax involves the power to destroy." *McCulloch* v. *Maryland*, 4 Wheat. 316. The bank resisted, and brought the case here for final determination. This court held that there was no immunity, and that the bank was liable for the taxes as an individual would have been. There is the same silence in the charter here in question as to taxation and as to liability for nuisances. Can exemption be claimed as to one more than the other? Is not the case just cited conclusive as to both?

Continued succession is given to corporations to prevent embarrassment arising from the death of their members. One striking difference between the artificial and a natural person

is, that the latter can do any thing not forbidden by law, while the former can do only what is so permitted. Its powers and immunities depend primarily upon the law of its creation. Beyond that it is subject, like individuals, to the will of the law-making power.

If the intent of the legislature touching the point under consideration be sought in the charter and its history, it will be found to be in accordance with the view we have expressed as matter of law. Three days before the charter of the plaintiff in error became a law, the legislature declared that the power of the village as to nuisances should not extend to those engaged in the business to which the charter relates. The subject must have been fully present to the legislative mind when the company's charter was passed. If it were intended the exemption should be inviolable, why was it not put in the company's charter as well as in that of the village? The silence of the former, under the circumstances, is a pregnant fact. In one case it was doubtless known to all concerned that the restriction would be irrepealable, while in the other, that it could be revoked at any time. In the revised village charter of 1869, the exemption was limited to two years from the passage of the act. This was equivalent to a declaration that after the lapse of the two years the full power of the village might be applied to the extent found necessary. Corporations in such cases are usually prolific of promises, and the legislature was willing to await the event for the time named.

That a nuisance of a flagrant character existed, as found by the court below, is not controverted. We cannot doubt that the police power of the State was applicable and adequate to give an effectual remedy. That power belonged to the States when the Federal Constitution was adopted. They did not surrender it, and they all have it now. It extends to the entire property and business within their local jurisdiction. Both are subject to it in all proper cases. It rests upon the fundamental principle that every one shall so use his own as not to wrong and injure another. To regulate and abate nuisances is one of its ordinary functions. The adjudged cases showing its exercise where corporate franchises were involved are numerous.

In *Coates* v. *The Mayor and Aldermen of the City of New York* (7 Cow. (N. Y.) 585), a law was enacted by the legislature of the State on the 9th of March, 1813, which gave to the city government power to pass ordinances regulating, and, if necessary, preventing the interment of dead bodies within the city; and a penalty of $250 was authorized to be imposed for the violation of the prohibition. On the 7th of October, 1823, an ordinance was adopted, forbidding interments or the depositing of dead bodies in vaults in the city south of a designated line. A penalty was prescribed for its violation. The action was brought to recover the penalty for depositing a dead body in a vault in Trinity churchyard. A plea was interposed, setting forth that the *locus in quo* was granted by the King of Great Britain, on the 6th of May, 1697, to a corporation by the name of the "Rector and Inhabitants of the City of New York in Communion with the Protestant Episcopal Church of England," and their successors for ever, as and for a churchyard and burying place, with the rights, fees, &c.; that immediately after the grant the land was appropriated, and thenceforward was used as and for a cemetery for the interment of dead bodies; that the rector and wardens of Trinity Church were the same corporation; and that the body in question was deposited in the vault in the churchyard by the license of that corporation. A general demurrer was filed, and the case elaborately argued.

The validity of the ordinance was sustained. The court held that "the act under which it was passed was not unconstitutional, either as impairing the obligation of contracts, or taking property for public use without compensation, but stands on the police power to make regulations in respect to nuisances." It was said: "Every right, from absolute ownership in property down to a mere easement, is purchased and holden subject to the restriction that it shall be so exercised as not to injure others. Though at the time it be remote and inoffensive, the purchaser is bound to know at his peril that it may become otherwise by the residence of many people in its vicinity, and that it must yield to by-laws and other regular remedies for the suppression of nuisances."

In such cases, prescription, whatever the length of time, has

no application. Every day's continuance is a new offence, and it is no justification that the party complaining came voluntarily within its reach. Pure air and the comfortable enjoyment of property are as much rights belonging to it as the right of possession and occupancy. If population, where there was none before, approaches a nuisance, it is the duty of those liable at once to put an end to it. *Brady* v. *Weeks*, 3 Barb. (N. Y.) 157.

The legislature of Massachusetts, on the 1st of February, 1827, incorporated the "Boston Beer Company," "for the purpose of manufacturing malt liquors in all their varieties in the city of Boston," &c. By an act of June, 1869, the manufacture of malt liquors to be sold in Massachusetts, and brewing and keeping them for sale, were prohibited, under penalties of fine and imprisonment and the forfeiture of the liquors to the Commonwealth. In *Beer Company* v. *The Commonwealth*, the Supreme Court of Massachusetts held that "the act of 1869 does not impair the obligations of the contract contained in the charter of the claimant, so far as it relates to the sale of malt liquors, but is binding on the claimant to the same extent as on individuals.

"The act is in the nature of a police regulation in regard to the sale of a certain article of property, and is applicable to the sale of such property by individuals and corporations, even where the charter of the corporation cannot be altered or repealed by the legislature."

This court unanimously affirmed that judgment. In our opinion, Mr. Justice Bradley, speaking for the court, said: "Whatever differences of opinion may exist as to the extent and boundaries of the police power, and however difficult it may be to render a satisfactory definition of it, there seems to be no doubt that it does extend to the protection of the lives, health, and property of the citizens, and to the preservation of good order and the public morals." The judgment here was placed also upon another ground. *Beer Company* v. *Massachusetts*, *supra*, p. 25.

Perhaps the most striking application of the police power is in the destruction of buildings to prevent the spread of a conflagration. This right existed by the common law, and the

owner was entitled to no compensation. 2 Kent, Com. 339, and notes 1 and *a* and *b*. In some of the States it is regulated by statute. *Russel* v. *The Mayor of New York*, 2 Den. (N. Y.) 461; *American Print Works* v. *Lawrence*, 23 N. J. L. 590.

In the case before us it does not appear that the factory could not be removed to some other place south of the designated line, where it could be operated, and where offal could be conveyed to it from the city by some other railroad, both without rightful objection. The company had the choice of any point within the designated limits. In that respect there is no restriction.

The charter was a sufficient license until revoked; but we cannot regard it as a contract guaranteeing, in the locality originally selected, exemption for fifty years from the exercise of the police power of the State, however serious the nuisance might become in the future, by reason of the growth of population around it. The owners had no such exemption before they were incorporated, and we think the charter did not give it to them.

There is a class of nuisances designated "legalized." These are cases which rest for their sanction upon the intent of the law under which they are created, the paramount power of the legislature, the principle of "the greatest good of the greatest number," and the importance of the public benefit and convenience involved in their continuance. The topic is fully discussed in Wood on Nuisances, c. 23, p. 781. See also 4 Waite, Actions and Defences, 728. This case is not within that category. We need not, therefore, consider the subject in this opinion.

Decree affirmed.

MR. JUSTICE FIELD did not sit in this case, nor take any part in its decision.

MR. JUSTICE MILLER concurred in the judgment; MR. JUSTICE STRONG dissented.

MR. JUSTICE MILLER. I concur in the judgment of the court, but cannot agree to the principal argument by which it

is supported in the opinion. As the question turns upon the existence of a contract and its nature, and not upon the power of the legislature to pass laws affecting the health and comfort of the community, a reference to them and to the power to repeal and modify them, where no contract is in question, is irrelevant. It is said that such contract as may be found in the present case was made subject to the police power of the legislature over the class of subjects to which it relates. The extent to which this is true depends upon the specific character of the contract and not upon the general doctrine. This court has repeatedly decided that a State may by contract bargain away her right of taxation. I have not concurred in that view, but it is the settled law of this court. If a State may make a contract on that subject which it cannot abrogate or repeal, it may, with far more reason, make a contract for a limited time for the removal of a continuing nuisance from a populous city.

The nuisance in the case before us was the very subject-matter of the contract. The consideration of the contract was that the company might and should do certain things which affected the health and comfort of the community; and the State can no more impair the obligation of that contract than it can resume the right of taxation which it has on valid consideration agreed not to exercise, because in either case the wisdom of its legislation has become doubtful.

If the good of the entire community requires the destruction of the company's rights under this contract, let the entire community pay therefor, by condemning the same for public use.

But I agree that contracts like this must be clearly established, and the powers of the legislature can only be limited by the express terms of the contract, or by what is necessarily implied. In the case before us, the company has two correlative rights in regard to the offal at the slaughter-houses in Chicago. One is to have within the limit of that city depots for receiving it, and the other is to carry it to a place in Cook County south of the dividing line between townships 37 and 38. The city or the State legislature is not forbidden by the contract to locate such depots within the city, where the health of

the city requires; in other words, the company has not the choice of location within the city. So, in regard to the chemical works. The company, by its contract, is entitled to have them in Cook County south of the line mentioned; but the precise locality within that large space is a fair subject of regulation by the police power of the State, or of any town to which it has been delegated. If within the limits of Hyde Park, that town may pass such laws concerning its health and comfort as may require the company to seek another location south of the designated line, without impairing the terms of the contract.

It is said that the only railroad by which the company can carry offal passes through Hyde Park, and that the ordinance is fatal to the use of the road. But the State did not contract that the company might carry by railroad, still less by that road. In short, in my opinion, there is within the limits of the original designation of boundary ample space where the company may exercise the power granted by the contract, without violating the ordinances of Hyde Park, and they, as a police regulation of health and comfort, are therefore valid, as not infringing that contract.

For this reason alone, I think the decree should be affirmed.

MR. JUSTICE STRONG. I cannot concur in the judgment directed by the court in this case. That the charter granted by the legislature, March 8, 1867, and accepted by the company, is a contract protected by the Constitution of the United States, cannot be denied, in the face of *Dartmouth College* v. *Woodward* (4 Wheat. 518), and the long line of decisions that have followed in its wake and reasserted its doctrines. And if the company holds its rights under and by force of the contract, those rights cannot be taken away or impaired, either directly or indirectly, by any subsequent legislation. This I believe to be incontrovertible, though the opinion just delivered may seem to express a doubt of it.

What, then, was the contract created by the charter and its acceptance? The first, second, and third sections constituted certain persons named, and their successors, associates, and assigns, a body politic and corporate, to have continued suc-

cession and existence for the term of fifty years, and declared that its capital stock should be $50,000, but gave the company power to increase the same to any sum not exceeding $250,000.

The fourth and fifth sections are as follows: —

"SECT. 4. Said corporation is hereby authorized and empowered to establish and maintain chemical and other works at the place designated herein, for the purpose of manufacturing and converting dead animals and other animal matter into an agricultural fertilizer and into other chemical products, by means of chemical, mechanical, and other processes.

"SECT. 5. Said chemical works shall be established in Cook County, Illinois, at any point south of the dividing line between townships 37 and 38. Said corporation may establish and maintain depots in the city of Chicago, in said county, for the purpose of receiving and carrying off from and out of the said city any and all offal, dead animals, and other animal matter which they may buy or own, or which may be delivered to them by the city authorities and other persons."

In order to have a clear apprehension of the rights and privileges which this charter was intended to secure to the company, and of the purposes which the legislature that granted it had in view, it is both admissible and important to take notice of the circumstances that existed at the time of its grant, so far as they are shown by the record. Chicago was then a populous city, built upon a level plain, where drainage and sewerage are exceedingly difficult, if not impossible. The slaughtering of animals and packing the flesh for markets in other places were conducted there upon a stupendous scale. The business had been growing in magnitude for years, and bid fair to be what it has become, — larger than that of any city in the United States, if not in the world. Of necessity, the amount of blood and offal produced was correspondingly large. It could not be disposed of or allowed to accumulate there without manifestly endangering the health and injuriously affecting the comfort of the hundreds of thousands of inhabitants of the city. It was, therefore, a matter of public importance to provide for its removal elsewhere. Such would have been the case had the business of slaughtering extended

no further than to supply the domestic market. At that time there was in the county of Cook, about thirteen miles south of the city, a marshy region in the midst of swamps, and much of it at all seasons covered with shallow ponds and bayous. It was very thinly inhabited, and it held out few, if any, invitations for additional settlement. Obviously it was a thing of public interest to relieve the city from accumulations of the blood and offal, and have them transported to a place where they would cause no injury, or so much less than they would cause if remaining in the midst of a dense population. It cannot be supposed that the legislature was unmindful of these considerations. The charter itself furnishes evidence that its motive and purpose were to furnish relief to the city, doing the least possible harm to residents in other localities. It offered to the grantees certain privileges as the consideration for large expenditures by them for removing from the city the matter so injurious to its inhabitants. It expressly authorized the establishment and maintenance by the corporation of chemical and other works for the purpose of manufacturing and converting dead animals and other animal matter into an agricultural fertilizer and into other chemical products. It designated the place where the works might be located as "in Cook County, at any point south of the dividing line between townships 37 and 38." It also granted to the corporation the right to establish and maintain depots in the city "for the purpose of receiving and carrying off from and out of the city any and all offal, dead animals, and other animal matter which they (the company) may buy or own, or which may be delivered to them by the city authorities or other persons."

When accepted, it was, therefore, a contract by which the State authorized the company to establish works and carry on a business which, without the authority, would be a nuisance to a few persons, in order to relieve a very large community from a greater nuisance. It was, therefore, a grant of a right to maintain a local nuisance.

In the exercise of the rights thus granted, the company established their works at a place in Cook County, south of the dividing line between townships 37 and 38, in what

is now the village of Hyde Park, but quite remote from the thickly inhabited part of the village. The point at which they are located is within the limits designated by the legislature. The selection of the place within those limits was confided by the charter to the company, and when the selection was made and the works were erected, the charter conferred the right to maintain them and carry on the business where they were located. I concede that the company could not exercise their discretion wantonly or in negligent disregard of the rights of others. But there is nothing in the case tending to show such disregard or wantonness. There is nothing to show, and it is not claimed, that the works are not at a place where they were authorized to be erected. On the contrary, there is every thing to show that the neighborhood where they were located was swampy and nearly uninhabited, giving, as I have said, little promise of further improvement.

The company also, at large expense, erected receiving depots, as authorized by the charter, for the purpose of receiving and carrying from the city matter consisting of dead animals and offal, and engaged in having it transported upon the only railroad upon which it could be transported to the chemical works located within the limits of the municipal division known as Hyde Park Village. That by the charter they were authorized to transport it thither, I regard as beyond any reasonable doubt. I admit to the fullest extent the rule that all charters of private corporations are to be construed most strongly against the corporations. Nothing is granted that is not expressly or clearly implied. But this rule is quite consistent with another, equally settled, that charters are to receive a reasonable interpretation in view of the purposes for which they were made. An express grant of power must include whatever is indispensably necessary to its enjoyment. No man can reasonably deny that a grant of power to establish works at a certain place to convert animal matter into an agricultural fertilizer, coupled with power to establish depots for receiving and carrying it from the city, does authorize its transportation to the converting works. It is not denied in the present case. One of the rights, then, which the company obtained by their charter was to carry the offal, dead animals, and other animal matter

into and through the village of Hyde Park to the works authorized for its conversion.

To recapitulate: The company obtained by their contract with the State, among others, three rights: One, a right to establish and maintain at a place in Cook County, south of the dividing line between townships 37 and 38, works for converting animal matter. The works have been established there at a cost of more than $200,000; second, they obtained the right to establish receiving depots for receiving and carrying such matter from Chicago; and, third, they obtained the right to carry such matter from their receiving depots to their converting works in Hyde Park. I do not understand any of these propositions to be questioned, either by the defendants in error or by the majority of this court.

The only serious question, therefore, is whether by any law of the State this contract has been impaired, and the rights assured by it have been taken away. On the 26th of March, 1869, nearly two years after the charter had been granted and accepted, the legislature of the State passed an act, entitled "An Act to revise the charter of the town of Hyde Park, in Cook County," giving therein full sanitary and police powers to the municipal authorities, but containing the following proviso: "The sanitary powers conferred by this act shall not be exercised by said board of trustees as against the Northwestern Fertilizing Company or the Union Rendering Company, located at or near the Calumet River, in said town, until the full expiration of two years after the passage of this act." Under this act the board of trustees, on the 14th of February, 1870, adopted an ordinance declaring all establishments for rendering offal, &c., nuisances, and imposing penalties upon any person who shall own, keep, or use them. The ordinance also prohibited the deposit of any dead animals or other filthy, nauseous, or offensive substance on any lot, street, alley, or other place in the town, and imposed penalties for any violation of the ordinance. On the 10th of April, 1872, the village of Hyde Park was incorporated, and succeeded to the rights and duties of the town of the same name; and on the twenty-ninth day of November, of that year, another ordinance of the village was made, reiterating in substance the provisions of the ordinance of Feb.

14, 1870. It went further, and its provisions make it impossible for the company to enjoy the rights accorded to them by their charter. It declared to be nuisances all places within the village kept, occupied, or used for the purpose of rendering offal or animal substances, when the same is or may be kept in such a manner as to occasion any offensive smell, and all places where any nauseous, unwholesome, or offensive business may be carried on, and it imposes penalties upon offenders. It prohibited the establishment, maintenance, or carrying on of any offensive or unwholesome business or establishment within the limits of the village, or within one mile of the limits thereof, and it ordained that "no person shall transfer, carry, haul, or convey any offal, dead animals, or other offensive matter or material into or through the village of Hyde Park." All these provisions are sanctioned by prescribed penalties, and the village authorities are enforcing them against the company. If they are enforced, it cannot carry on the business which its charter authorized. The offal from Chicago or elsewhere cannot be brought to the works; and if it could, the company could not render it into a fertilizer. The ordinance is in direct conflict with the legislative grant, a grant which was for a consideration returned, and which, therefore, has the force of a contract. It is, in my judgment, a palpable violation of the constitutional provision that no State shall pass a law impairing the obligation of a contract.

It has been suggested that the charter did not precisely designate the place where the rendering works might be established, and to which the city offal might be carried; and hence it is argued that, notwithstanding the contract, it is within the power of the legislature to order the removal of the works to another locality, and that this may be done mediately by a municipal corporation empowered by the State. The inference I emphatically deny. It is true the charter empowered the company to select a location within certain geographical limits, and did not itself define the exact point; but when under this power a location was made by the company, and hundreds of thousands of dollars were expended upon it, it was beyond the power of the other contracting party to change it. The location was lawful when made, and, if lawful then, it can-

not be made unlawful afterwards. If it could be, it would be in the power of the legislature to change it a second, a third, a fiftieth time, and fix it at last at a place where none of the rights of the company could be enjoyed. No one has ever doubted that when a railroad company has been authorized, as is often the case, to construct a railroad beginning at some point within a township or a county, and has constructed its road from some point in that township or county, its right to maintain it from that terminus is indefeasible. That which was left uncertain has become certain. So, if a warrant be granted for a tract of land in a specified district without describing it, when the warrantee has selected a tract, the contract is closed, and his right to that tract is absolute. It must be, therefore, that the location of the company's works at the places where they were located, recognized as a proper location in the act of the legislature of 1869, is one which cannot be changed without the consent of both parties to the contract, or without compensation made.

But it is said the ordinance complained of is only an exercise of the police power of the State, and that the charter must be assumed to have been granted and accepted subject to that police power. I admit that the police power of a State extends generally to the prevention and removal of things injurious to the comfort of the public. I admit also that the works of the company may have been and probably were offensive, and were a nuisance, unless their character was changed by the law. So, also, carrying offal, or animal matter, into or through the village may have been and probably was more or less offensive. But the question now is, were the works or the transportation things illegal? In view of the contract contained in the charter, was it a legitimate exercise of the State's police power to declare them illegal, abate them, and inflict penalties for doing what the State had declared that the company might do? I am confident it was not. Had the charter been a mere license, instead of a contract, the case would be different. But the legislature may legalize acts which, without such legislation, would be obnoxious to criminal law. It may legalize that which, without such action, would be a nuisance. It may do this either by law or by contract. It may limit the extent to

which its police power shall be exerted. And it often does. The charter of a railroad company is a familiar illustration. Crossing highways and running locomotives, were they not authorized by law, would be nuisances. Who will contend that, when a charter has been granted for building a railway and running locomotives thereon, the company or its agents can be punished criminally for maintaining a nuisance? Why not? Because there is no nuisance in the eye of the law, and the State has contracted away a portion of its police power. So, also, an illustration may be found in the case of gas companies. If a legislature charter a gas company, and locate its works at a designated place, authorizing the manufacture of gas there, it would be marvellous indeed if the agents of the company could be indicted for a nuisance, or if the legislature could without compensation deny the exercise of the powers granted, because manufacturing gas is offensive. The police power of a State is no more sacred than its taxing power. We have held again and again that a State may by contract with one of its corporations bind itself not to tax the property of that corporation. If so, why may it not bind itself not to exercise its police power over certain employments. It would be a monstrous stretch of credulity to conclude that the legislature of Illinois did not intend such a relinquishment of police power when it granted the charter to the plaintiff in error. Its members must be assumed to have had common knowledge. They knew the offensiveness of animal offal. The plain object of the charter was to relieve the citizens of Chicago from it. The legislature knew that the transportation of the offal to a point south of the designated line, and its deposit there, would inevitably be offensive to the much less numerous inhabitants of the vicinity. With this knowledge they authorized what the plaintiff in error has been doing. They invited the investment of $250,000 to enable it to be done, and they entered into a contract that the company should have a right to do it for fifty years. To say now, as the judgment in this case does, there was a tacit reservation, that under the pretence of exercising the police power of the State the rights of the company may all be taken away, and their investments destroyed without compensation, is, in my opinion, not only unjust, but unwarranted by any judicial

decision heretofore made. While saying this, I freely admit that the police power of the State may remain to regulate the conduct of the company's business, provided the regulation does not extend to the destruction of the chartered rights. It may prescribe that the offal shall be transported to the appellants' works in closed cars or wagons. It may impose reasonable regulations upon the disposition of the offal when received at the rendering works, but under the cover of regulation it cannot destroy.

Nothing, I admit, is more indefinite than the extent or limits of what is called police power. I will not undertake to define them. Certainly it has limits. I refer to what Judge Cooley has said in reference to the exercise of the power over private corporations. Cooley, Const. Lim. 577. He says, "The exercise of the police power in these cases must be this: the regulations must have reference to the comfort, safety, or welfare of society; they must not be in conflict with any of the provisions of the charter, and they must not, under the pretence of regulations, take from the corporation any of the essential rights and privileges which the charter confers. In short, they must be police regulations in fact, and not amendments of the charter in curtailment of the corporate franchise." This I understand to be entirely correct. In support of it he refers to numerous decisions, which I will not cite, but to which I also refer. There are many others fully sustaining the text as I have quoted it.

There is no authority to the contrary. The cases relied upon to uphold the exercise of the power which the defendants in error assert are all clearly distinguishable. They are not cases where the police power was exerted for the destruction of a chartered right distinctly granted by a contract.

The only decision referred to which has been made by this court is *Beer Company* v. *Massachusetts*, *supra*, p. 25. In my judgment, it furnishes no support for the present ruling. The case was this: In 1828, the legislature granted a charter to the Boston Beer Company, by which they were made a corporation, "for the purpose of manufacturing malt liquors in all their varieties," and made the corporation subject to all the duties and requirements of an act passed on the 3d of March,

1809, entitled "An Act defining the general powers and duties of manufacturing companies," and the several acts in addition thereto. The general manufacturing act of 1809 contained a provision that the legislature might from time to time, upon due notice to any corporation, make further provisions and regulations for the management of the business of the corporation and for the government thereof, or wholly to repeal any act or part thereof establishing any corporation, as should be deemed expedient. In 1829, the act of 1809 was repealed, with the following qualification, however: "But this repeal shall not affect the existing rights of any person or the existing or future liabilities of any corporation, or any members of any corporation now established, until such corporation shall have adopted this act and complied with the provisions herein contained." The legislature of the State, in 1869, passed an act restricting the sale within the Commonwealth of any malt liquors, and prohibiting it except in certain specified cases.

The Supreme Judicial Court of the State adjudged: first, that the act of 1869 did not impair the obligation of the contract contained in the charter of the beer company, so far as it related to the sale of malt liquors, but was binding upon the company to the same extent as on individuals. The sale was not expressly authorized, nor authorized by necessary implication. And, secondly, the court held that the act was in the nature of a police regulation in regard to the sale of a certain article of property, and is applicable to the sale of such property by individuals and corporations, even when the charter of the corporation cannot be altered or repealed by the legislature.

We affirmed the decision of the State court. But there was nothing in the charter that authorized, either expressly or by necessary intendment, the company to sell their product within the Commonwealth. It was not a contract to authorize what was a nuisance when it was granted, or what might thereafter become one. It was not a contract respecting any thing that was illegal when the contract was made. The contract under consideration in the present case was. It was made with reference to the exercise of the State's police power, and in restraint of it. It is obvious, therefore, the beer com-

pany's case has no applicability to the one we have now in hand.

I have said enough to indicate the reasons for my dissent. To me they appear very grave. In my judgment, the decision of the court denies the power of a State legislature to legalize, during a limited period, that which without its action would be a nuisance. It enables a subsequent legislature to take away, without compensation, rights which a former one has accorded, in the most positive terms, and for which a valuable consideration has been paid. And, in its application to the present case, it renders it impossible to remove from Chicago the vast bodies of animal offal there accumulated; for if the ordinance of Hyde Park can stand, every other municipality around the city can enforce similar ordinances.

INSURANCE COMPANY *v.* LEWIS.

The statute of Missouri of 1868 (1 Wagner's Stat., ed. 1872, p. 122, sect. 8) does not authorize a suit by a public administrator in that State against a foreign insurance company doing business there, to enforce the payment of a policy of insurance, not made or to be executed in that State, upon the life of a citizen of Wisconsin, who neither resided, died, nor left any estate in Missouri.

ERROR to the Circuit Court of the United States for the Eastern District of Missouri.

The facts are stated in the opinion of the court.

Mr. Everett W. Pattison for the plaintiff in error.

Mr. J. D. S. Dryden, contra.

MR. JUSTICE HARLAN delivered the opinion of the court.

This action was commenced in the Circuit Court of St. Louis County, Missouri, by Lewis, the defendant in error, as public administrator of that county, upon a policy of insurance dated July 30, 1873, whereby the Union Mutual Life Insurance Company of Maine agreed to insure the life of William S. Berton, "of Milwaukee, County of Milwaukee, State of Wisconsin," in the sum of $5,000, payable three months after due

proof of death, to his executors, administrators, or assigns. The case was removed for trial into the Circuit Court of the United States for the Eastern District of Missouri, where a verdict and judgment were rendered against the company. A new trial and motion in arrest of judgment having both been denied, the present writ of error is prosecuted by the company.

A preliminary question is presented as to the right of the defendant in error, as public administrator of St. Louis County, Missouri, to maintain any action whatever upon the policy sued on. His authority in the premises is claimed to exist under a Missouri statute of 1868, which was in force when this action was instituted. That statute makes it "the duty of the public administrator to take into his charge and custody the estates of all deceased persons in his county, in the following instances: *First*, When a stranger dies intestate in the county, without relatives, or dies leaving a will, and the executor named is absent, or fails to qualify; *second*, when persons die intestate, without any known heirs; *third*, when persons unknown die, or are found dead, in the county; *fourth*, when money, property, papers, or other estate are left in a situation exposed to loss or damage, and no other person administers on the same; *fifth*, when any estate of any person who dies intestate therein or elsewhere is left in the county liable to be injured, wasted, or lost, when said intestate does not leave a known husband, widow, or heir in this State; *sixth*, when from any good cause said court shall order him to take possession of any estate to prevent its being injured, wasted, purloined, or lost." 1 Wagner's Stat., ed. 1872, p. 122. The same statute requires the public administrator, immediately upon taking charge of any estate, for the purpose of administering the same (except that of which he shall take charge under the order of the proper court), to file a notice of such fact in the clerk's office of the court having probate jurisdiction. Id. p. 123.

On 17th September, 1875, the defendant in error, as public administrator, filed in the clerk's office of the Probate Court of St. Louis County a notice, addressed to the judge of that court, informing creditors and all other persons interested in the estate of William S. Berton, "late of the county of St.

Louis," that he had, on that day, taken charge of such estate, for the purpose of administering the same; and immediately thereafter, on the same day, commenced this action in the Circuit Court of that county, without making and presenting proofs of loss, or giving the company previous notice of his administration, or that he, as such administrator, asserted any claim under the policy. These steps were taken, as was conceded on the trial below, "for the sole purpose of administering upon and collecting the policy in suit." It also appears that Berton, at the date of the policy, and at his death, which occurred on 31st March, 1874, was a resident of Milwaukee and a citizen of Wisconsin; that he died in that city, and had not at any time resided in the State of Missouri; that he left no money, property, papers, or other estate in Missouri; that the policy sued on was found among his papers after his death; that on 5th June, 1874, administration upon his estate was granted by the County Court of Milwaukee County, Wisconsin, to Benjamin K. Miller; that the defendant in error was never ordered by the Probate Court of St. Louis County, or any other court, to take charge of Berton's estate.

The bare statement of these facts, which are admitted or are clearly proven, is enough to show an absolute want of authority in Lewis to take charge of or administer the estate of Berton. His collection, by suit, of the amount, if any, due from the company upon the policy sued on, or any administration by him, in his capacity as public administrator, of Berton's estate, would be acts of palpable usurpation. The notice filed by him in the clerk's office of the Probate Court was ineffective for any purpose, although it contained the false recital that Berton was "late of the county of St. Louis." Such a notice was required only when he took charge of an estate upon which he could legally administer. No judgment rendered in this action, upon the merits, could protect the company against a future suit by the proper representatives of Berton's estate. This would not be the case if Lewis's claim to administer that estate had any sound foundation upon which to rest. It was not the purpose of the statute to authorize a suit by a public administrator in Missouri against a foreign corporation doing business there, upon a contract, not made or to be executed in

that State, with a citizen of another State who neither resided nor died, nor left any estate, in Missouri. Without discussing the validity of any local statute framed for such purposes as are imputed, by this action, to the Missouri statute of 1868, it is sufficient to say that the present case is not within that statute, according to any reasonable interpretation of its provisions.

It is claimed, however, that this view cannot be sustained without questioning the authority of the public administrator in a collateral proceeding. In support of that position we are referred to *Wetzell* v. *Waters*, 18 Mo. 396; *Riley's Adm'r* v. *McCord's Adm'r*, 24 id. 266; *Lancaster, Adm'r*, v. *Washington Life Insurance Co. of New York*, 62 id. 121; and *Johnson* v. *Beazley*, 65 id. 250. We have not access, at this time, to the volume of reports last cited, but upon examining the other cases we find nothing which, in any degree, militates against the views we have expressed. In the case in 18 Mo. a judgment, by default, had been taken, and the question was presented, upon appeal, whether it was incumbent upon the public administrator, in whose favor the judgment was rendered, to state in his pleadings, or to prove, as a condition precedent to recovery, the facts which authorized him to take upon himself the burden of administration. It was held that it was not, and that no one but an executor, or legally appointed administrator, could dispute his authority, except in cases in which the same thing might be done in relation to private administrations. In the case in 24 Mo. it was decided that illegality in the grant of the letters of administration could not be taken advantage of in a collateral proceeding, and that they must be regarded as valid until regularly revoked.

In the case of 62 Mo. the issue was as to the fact of the death of a citizen of Missouri, whose life had been insured, and upon whose estate administration had been granted by the Probate Court of St. Louis County, which was the county of his residence. The answer admitted the appointment of the administrator, but denied the fact of death, and, upon that ground, questioned the legality of such appointment. The court held that the admissions in the pleadings and the testimony of the defendant established the fact of letters of administration having

been granted, and that such letters constituting *prima facie* evidence of the death of the person on whose estate they were issued, the burden of proof was upon the defendant to show that the assured was not dead, and consequently that administration had been illegally granted. These decisions, it is obvious, have no application to the subject under consideration. They announce no principles in conflict with those here declared. The company does not ask the revocation of Lewis's letters of administration. Its answer does not dispute the validity of his appointment as public administrator of St. Louis County. Recognizing his right to perform all the functions which, by the laws of Missouri, pertain to that office, the company, in view of the facts we have stated, simply denies that Lewis had any authority, under the statutes of that State or by virtue of his appointment as such administrator, to take charge of the particular estate in question, or assert any claim arising out of the alleged contract of insurance. If the mere assumption by Lewis of authority to that extent was sufficient *prima facie* to maintain this action, — a proposition which it is unnecessary to discuss, — the conceded and established facts show an entire absence of any such authority, and prove that the company was not bound to litigate with him, in any court whatever, its liability upon the policy sued on. The company only sought to restrict him to the discharge of his legitimate duties, and prevent him from intermeddling in matters which did not concern him as public administrator.

But it is further contended that the answer, which relied upon these objections to the action, was in the nature of a plea in abatement, and that such objections were, according to established rules of practice in the Federal courts, waived when the company answered to the merits without first having the court dispose of the issue as to Lewis's right to maintain the action. This position is, however, wholly untenable. The defence, so far as it impeached the authority of Lewis, by virtue of his appointment as public administrator, to collect the amount, if any, due on the policy, was in bar, not in abatement, of the action. The defence, if true, did not question his capacity as such administrator to perform any of the duties imposed upon him by law. It only insisted that he, as such lawfully

appointed administrator, had no cause of action against the company upon the alleged contract of insurance.

What we have said is decisive of the case, and we are consequently relieved from the necessity of inquiring whether the policy sued on was ever delivered to or accepted by Berton, so as to be binding upon the insurance company. That question can only arise in an action against the company by one who is entitled by law to represent his estate.

The judgment will be reversed, with directions to dismiss the action without prejudice to any suit upon the policy by the proper parties in the proper forum; and it is

So ordered.

MATTINGLY v. DISTRICT OF COLUMBIA.

1. Congress, in exercising legislation over property and persons within the District of Columbia, may, provided no intervening rights are thereby impaired, confirm the proceedings of an officer in the District, or of a subordinate municipality, or other authority therein, which, without such confirmation, would be void.
2. An act of Congress, approved June 19, 1878 (20 Stat. 166), entitled "An Act to provide for the revision and correction of assessments for special improvements in the District of Columbia, and for other purposes," considered, with reference to the preceding legislation of Congress and of the legislative assembly of said District. *Held*, 1. That said act was practically a confirmation of the doings of the board of public works of the District, touching the improvement of streets and roads, and a ratification of the assessments prepared under an act of said assembly of Aug. 10, 1871, as charges upon the adjoining property, and that it conferred authority upon the commissioners to revise and correct such assessments within thirty days after the passage of the act. 2. That such confirmation was as binding and effectual as if authority had been originally conferred by law to direct the improvements and make the assessments.

APPEAL from the Supreme Court of the District of Columbia.

The facts are sufficiently stated in the opinion of the court.

Mr. Richard T. Merrick and *Mr. T. A. Lambert* for the appellant.

Mr. A. G. Riddle, contra.

MR. JUSTICE STRONG delivered the opinion of the court.

The facts of this case appear in the bill, the answer, and the

accompanying exhibits. So far as it is necessary to restate them now, they are as follows: —

In the year 1871, the board of public works of the District of Columbia, a board constituted under and by virtue of the organic law of the District, caused to be constructed a sewer in and along the line of Seventh Street, in the city of Washington, extending from Virginia Avenue to the Potomac River. They also caused the street and sidewalks to be paved, and curbstones at the gutters to be set. The work had been commenced by the corporation of Washington before the board came into existence, and a contract had been made by the city with George M. Linville to pave and construct a sewer along that street; but the work had not been completed, when Congress, by act approved Feb. 22, 1871, incorporated the District and provided for the existence of a board of public works. The act declared the board should have entire control of, and make all regulations which they should deem necessary for keeping in repair, the streets, avenues, alleys, and sewers of the city, and all other works which might be intrusted to their charge by the legislative assembly of the District, or by Congress. Under this authority the board, when organized, took charge of the work on Seventh Street, continued Linville as contractor, caused the sewer to be changed and enlarged, and contracted with Albert Gleason for paving the sidewalks and setting the curbstones. After the completion of the work, they made an assessment of one-third of its cost upon the property adjoining, proportioning it to the frontage; gave notice of the assessment to the property owners; and the District was about to proceed in the collection of the assessments when this bill was filed. The assessments were made ostensibly by authority of the thirty-seventh section of the organic act of the District. The clause of that section conferring the authority is as follows: "They (the board of public works) shall disburse upon their warrant all moneys appropriated by the United States, or the District of Columbia, or collected from property holders, for the improvement of streets, avenues, alleys, and sewers, and roads and bridges, and shall assess, in such manner as shall be prescribed by law, upon the property adjoining and to be especially benefited by the improvements, authorized by law

and made by them, a reasonable proportion of the cost of the improvement, not exceeding one-third of such cost, which sum shall be collected as all other taxes are collected."

The complainants are property holders along the line of Seventh Street, adjoining that part of the street where the sewer was constructed, and where the curbstones and the paving were laid. Their properties are some of those upon which the board of public works made an assessment of one-third the cost of the improvement, and they bring this bill for an injunction against the collection of the sums assessed, and against issuing certificates of indebtedness of their properties. The bill also seeks a decree that the assessments are illegal and void, and an injunction upon the District, or the board of public works, against making any payment for the work done, and upon the contractors against receiving payment.

In support of the prayer for such relief, the bill charges, 1st, that the board was not authorized by law to make the improvement along Seventh Street; 2d, that no law existed at the time when the assessments were made, prescribing the manner in which the board should make assessments; 3d, that assessments according to the frontage of the street were unauthorized and illegal; and 4th, that in making the assessment no part of the cost of the improvement was charged upon school-house and church property, exempt by law from taxation, but that the whole of the one-third of the cost was charged against the other adjoining property. There are other minor complaints of the assessment, not, however, needful to be stated. They assail only its regularity.

We do not propose to inquire whether the charges of the bill are well founded. Such an inquiry can have no bearing upon the case as it now stands; for were it conceded that the board of public works had no authority to do the work that was done at the time when it was done, and consequently no authority to make an assessment of a part of its cost upon the complainants' property, or to assess in the manner in which the assessment was made, the concession would not dispose of the case, or establish that the complainants have a right to the equitable relief for which they pray. There has been congressional legislation since 1872, the effect of which upon the assessments

is controlling. There were also acts of the legislative assembly of the District, which very forcibly imply a confirmation of the acts and assessments of the board of which the bill complains. If Congress or the legislative assembly had the power to commit to the board the duty of making the improvements, and to prescribe that the assessments should be made in the manner in which they were made, it had power to ratify the acts which it might have authorized. And the ratification, if made, was equivalent to an original authority, according to the maxim, *Omnis ratihabitio retro trahitur et mandato priori æquiparatur.* Under the Constitution, Congress had power to exercise exclusive legislation in all cases whatsoever over the District, and this includes the power of taxation. *Cohen* v. *Virginia*, 6 Wheat. 264. Congress may legislate within the District, respecting the people and property therein, as may the legislature of any State over any of its subordinate municipalities. It may therefore cure irregularities, and confirm proceedings which without the confirmation would be void, because unauthorized, provided such confirmation does not interfere with intervening rights. Judge Cooley, in view of the authorities, asserts the following rule: "If the thing wanting, or which failed to be done, and which constitutes the defect in the proceeding, is something the necessity for which the legislature might have dispensed with by prior statute, then it is not beyond the power of the legislature to dispense with it by subsequent statute. And if the irregularity consists in doing some act, or in the mode or manner of doing some act, which the legislature might have made immaterial by prior law, it is equally competent to make the same immaterial by a subsequent law." Cooley, Const. Lim. 371. This rule, we think, is accurately stated.

The question is therefore presented, whether the legislative assembly was empowered by the organic law of the District to commit to the board of public works public improvements, to make appropriations for them, and to prescribe the manner in which assessments should be made, or whether Congress itself has confirmed the assessments of which the plaintiffs complain.

There is much in the legislation of the District assembly which, if it does not show a direct ratification of what was

done by the board of public works, at least exhibits an acquiescence in it and an approval. After the work had been done upon Seventh Street, an act of that assembly, passed May 29, 1873, extended the time for payment of the assessments, and authorized the board to issue, and use in the discharge of outstanding obligations, certificates of indebtedness for work done under its direction, and chargeable to the private property benefited thereby. This included assessments for work done or in progress under existing contracts, and the act declared that such certificates should be receivable in payment for assessments for special improvements. The second section directed all certificates thereafter issued to be deposited with the commissioners of the sinking fund of the District, and pledged them for the payment of the principal and interest. The third section extended the time of payment, and provided that, upon default of payment, the property against which the assessments and certificates existed should be sold; and the fourth section authorized and directed the commissioners of the sinking fund to purchase the certificates, on request of the holders, and collect them on their account. It is difficult to understand what this act meant, if it did not recognize the validity of the assessments made by the board of public works, and consequently the authority by which the work was done and the improvements were made.

The action of Congress has been even more significant. Passing by the act of March 3, 1875, which gave directions for sales to collect the assessments for special improvements, in itself presenting no doubtful implication, the act of Congress of June 19, 1878, appears to us to have set the matter at rest. That act peremptorily directed the commissioners of the District "to enforce the collection, according to existing laws, of all assessments for special improvements prepared under an act of the legislative assembly of Aug. 10, 1871, as charges upon the property benefited by the improvements in respect to which the said assessments were made." It also authorized the commissioners to revise such assessments within thirty days from the passage of the act, and correct the same, so far as the charges were erroneous or excessive. The meaning of this act is not to be mistaken. It was practically a

confirmation of what the board of public works had done. It is not to be conceded that Congress ordered the collection of assessments which it regarded as illegal; and the permission given to the commissioners to correct errors and excesses in them by giving drawback certificates, to be receivable in payment of assessments, leaves no doubt that the authority of the board to make them, as they were made, was intended to be recognized. It is not denied that the act had in view these assessments now assailed by the complainants, and no such denial could honestly be made. We are of opinion, therefore, that the assessments have been ratified by Congress. If there were errors in the manner of making them, or in the amount of the charges, provision was made for correction of the errors. If the church and school properties should not have been exempted, and consequently the amount charged upon the complainants' properties was erroneously increased, the commissioners were empowered to correct the wrong.

It may be that the burden laid upon the property of the complainants is onerous. Special assessments for special road or street improvements very often are oppressive. But that the legislative power may authorize them, and may direct them to be made in proportion to the frontage, area, or market value of the adjoining property, at its discretion, is, under the decisions, no longer an open question.

In conclusion, we may notice an argument of the complainants, that the deeds by which the fee-simple of the streets of Washington was conveyed to the United States require the Federal government to pay for grading and improving the streets. In answer to this, it is sufficient to say no such point was made in the court below, and no such deeds are in evidence or are exhibits in the case. In their absence, we cannot assume the fact upon which this argument rests.

Decree affirmed.

NOTE. — *National Bank* v. *Shoemaker*, appeal from the Supreme Court of the District of Columbia, was heard at the same time as the preceding case, and was argued by *Mr. Walter S. Cox* and *Mr. William A. Cook* for the appellant, and by *Mr. Richard T. Merrick* and *Mr. T. A. Lambert* for the appellee.

MR. JUSTICE STRONG delivered the opinion of the court.

This case is substantially ruled by *Mattingly* v. *District of Columbia*, *supra*, p. 687. The bill, as in that case, was for an injunction against the collection of a

special assessment, and for the surrender and cancellation of a certificate of indebtedness for such an assessment. The property upon which the assessment was laid is in the District of Columbia, though outside the bounds of the city of Washington. But the legislative assembly, created by the organic act, had authority to legislate for the entire District; and the board of public works had the same authority over the roads of the District as they had over the streets and avenues in the city. They had, throughout the District, the same power to make assessments for improvements. The assessment of which the bill complains was made by the board, and it was one of those which were confirmed and ordered to be enforced by the act of Congress of June 19, 1878. The bill of the complainant cannot, therefore, be sustained.

The decree will be reversed, and the cause remitted with instructions to dismiss the bill; and it is

So ordered.

RUCH *v.* ROCK ISLAND.

1. It is not necessary to the admissibility of a deposition, offered to prove the evidence given at a former trial by a witness who is now dead, that the deponent shall be able to give the exact language of such witness. The substance is all that the law requires, and the deponent may, in order to refresh his memory, recur to his notes taken at the trial.
2. *Morgan* v. *Railroad Company* (96 U. S. 716), wherein the law of Illinois touching dedications of real property is discussed, cited and approved.
3. The breach of conditions subsequent, which are not followed by a limitation over to a third person, does not, *ipso facto*, work a forfeiture of the freehold estate to which they are annexed. It only vests in the grantor or his heirs a right of action which cannot be transferred to a stranger, but which they, without an actual entry or a previous demand, can enforce by a suit for the land.

ERROR to the Circuit Court of the United States for the Northern District of Illinois.

The facts are stated in the opinion of the court.

Submitted by *Mr. Charles B. Waite* for the plaintiff in error, and by *Mr. W. C. Gondy* for the defendant in error.

MR. JUSTICE SWAYNE delivered the opinion of the court.

This is an action of ejectment. The plaintiff below is the plaintiff in error. There was a trial before Judge Drummond, and a verdict for the defendant. This verdict was vacated and a new trial ordered. The case was re-tried by Judge Blodgett. The jury again found for the defendant, and this judgment was

entered accordingly. Between the two trials the great Chicago fire occurred, and all the files in the case were destroyed. Among them were a deposition of Henry Powers and a deposition of Hibbard Moore. At the time of the second trial both deponents were dead. The depositions of Connelly and Harson were offered to prove the contents of the depositions which had been burned. Connelly deposed that he was the counsel for the defendant at the first trial, and that he put the interrogatories to Powers when his deposition was taken. He then proceeded "to give the substance of the testimony of said Powers, as given in his (Powers's) deposition, he, Connelly, refreshing his recollection by notes taken, as witness said, by him at that time." He said he gave "the main and principal points of the deposition of the deceased witness, but could not give the exact language." He also said he gave "the main and principal points of the cross-examination and re-examination of said Powers, as given when said Powers's deposition was taken." Harson deposed that he was the commissioner who took the deposition of Powers and the deposition of Moore; that he remembered the substance of the testimony of each of those witnesses, but was not able to give the exact language of either. He then made a statement of the testimony of each as given when his deposition was taken. To the admission of all this testimony of Connelly and Harson the counsel for the plaintiff in error objected. It was received, and he excepted.

There was no error in admitting the testimony. The precise language of the deceased witnesses was not necessary to be proved. To hold otherwise would, in most instances, exclude this class of secondary evidence, and in so far defeat the ends of justice. Where a stenographer has not been employed, it can rarely happen that any one can testify to more than the substance of what was testified by the deceased, especially if the examination was protracted, embraced several topics, and was followed by a searching cross-examination. It has been well said that if a witness in such case, from mere memory, professes to be able to give the exact language, it is a reason for doubting his good faith and veracity. Usually there is some one present who can give clearly the substance, and that is all the law demands. To require more would, in effect, abrogate the rule

that lets in the reproduction of the testimony of a deceased witness. The uncertainty of human life renders the rule, as we have defined it, not unfrequently of great value in the administration of justice. The right to cross-examine the witness when he testified shuts out the danger of any serious evil, and those whose duty it is to weigh and apply the evidence will always have due regard to the circumstances under which it comes before them, and rarely overestimate its probative force. 1 Greenl. Evid., sect. 165, and notes.

The living witness may use his notes taken contemporaneously with the testimony to be proved, in order to refresh his recollection, and, thus aided, he may testify to what he remembers; or if he can testify positively to the accuracy of his notes, they may be put in evidence. Id., sect. 166, and notes.

The bill of exceptions discloses nothing wrong in the use of his notes made by Connelly.

At the trial in the court below the case turned upon questions of dedication. The theory of the plaintiff was that the property had been specially dedicated for schools and churches; and it was insisted that, there having been conveyances of parts of the premises by some of those bodies for other purposes, the conveyances were void, and that the parts so conveyed reverted to the dedicators, "their heirs or assigns." The city contended that the dedication was a general one to the public of the municipality.

At the close of the testimony on both sides, the plaintiff in error submitted eight prayers for instructions to the jury. The court declined to give any of them, but instructed at large, according to its own views of propriety and the exigencies of the case. The court had a right to do both; and if the instructions covered all the points, and presented them fully and fairly to the jury, the duty resting upon the judge was well discharged, and it was not error to refuse those asked for by the plaintiff. This is the settled rule in the courts of the United States, and it is a wise one. It prevents the jury from being confused by a multiplicity of counsels, and promotes the right administration of justice. *Labor* v. *Cooper*, 7 Wall. 565; *Indianapolis, &c. Railroad Co.* v. *Horst*, 93 U. S. 295.

Except as to a single point, — and that was in favor of the

plaintiff in error, — we think the charge of the learned judge was within the category we have laid down. It was strictly impartial. It covered the whole case; nothing that should have been said was omitted. It was well considered, and, with the exception named, stated clearly and correctly the law upon every legal point to which it adverted. The suggestions complained of, made by the judge to the jury, were warranted by the case as found in the record, and did not exceed the limits proper to be observed upon the occasion. *Nudd et al.* v. *Burrows, Assignee*, 91 U. S. 427.

In *Morgan* v. *Railroad Company* (96 U. S. 716), we had occasion recently to consider the law of dedications in Illinois. It is needless in this opinion to do more than refer to that case, without going over the same ground again.

The refusal to set aside the verdict and grant a new trial cannot be considered here. It was a matter resting in the discretion of the court. *Mulhall* v. *Keenan et al.*, 18 Wall. 342.

A few words as to the erroneous point in the charge will be sufficient. John W. Spencer was one of the original proprietors and one of the dedicators. He owned at the time of the dedication three-eighths of the premises. A conveyance was made to the plaintiff by his two children, who were his sole heirs-at-law. The plaintiff asked the court to instruct the jury that if his contention as to the facts was correct he was entitled to recover; and the court in the charge given instructed accordingly. It was not denied by the plaintiff that the title had passed, and that the estate had vested by the dedication. If the conditions subsequent were broken, that did not *ipso facto* produce a reverter of the title. The estate continued in full force until the proper step was taken to consummate the forfeiture. This could be done only by the grantor during his lifetime, and after his death by those in privity of blood with him. In the mean time, only a right of action subsisted, and that could not be conveyed so as to vest the right to sue in a stranger. Conceding the facts to have been as claimed by the plaintiff in error, this was fatal to his right to recover, and the jury should have been so instructed. *Webster* v. *Cooper*, 14 How. 488; *Davis* v. *Gray*, 16 Wall. 203; 1 Shep. Touch. 149; *Winn* v. *Cole's Heirs*, 1 Miss. 119; *Southard* v. *Central*

Railroad Co., 26 N. J. L. 13; *Rector, &c. of King's Chapel* v. *Pelham*, 9 Mass. 501; *Parker* v. *Nichols*, 7 Pick. (Mass.) 111; *Nicholl* v. *New York & Erie Railroad Co.*, 12 Barb. (N. Y.) 460; *Bank* v. *Kent*, 4 N. H. 221; *Cross* v. *Carson*, 8 Blackf. (Ind.) 138; *Hooper* v. *Cummings*, 45 Me. 359; *Propagation of the Gospel in Foreign Parts*, 2 Paine, 545; *Underhill* v. *Saratoga & Washington Railroad Co.*, 20 Barb. (N. Y.) 455; *Shannon, Adm'r*, v. *Fuller*, 20 Ga. 566; *Thompson* v. *Bright*, 1 Cush. (Mass.) 428.

Bringing suit for the premises by the proper party is sufficient to authorize a recovery, without actual entry or a previous demand of possession. *Cornelius* v. *Ivins*, 2 Dutch. (N. J.) 376.

The judgment of the Circuit Court is

Affirmed.

RAILROAD COMPANIES *v.* GAINES.

1 A provision in the charter of a railroad company that "the capital stock of said company shall be for ever exempt from taxation, and the road, with all its fixtures and appurtenances, including workshops, machinery, and vehicles of transportation, shall be exempt from taxation for the period of twenty years from the completion of the road, and no longer," does not, after the expiration of that period, exempt from taxation the road, with its fixtures, &c., although the same were purchased with or represented by capital.

2. In 1875, the State of Tennessee enacted a railroad tax law, the eleventh section of which provided that a railroad company accepting that section as a special amendment to its charter, and paying annually to the State one and one-half per cent on its gross receipts, should be exempt from other provisions of the act, and that such payment should be in full of all taxation. A company, whose charter, granted in 1846, exempted from taxation its capital stock for ever, and its road, fixtures, &c., for a specific period, which expired March 28, 1877, accepted the provisions of that section, and paid, for 1875 and 1876, the required percentage. That section having been declared by the Supreme Court of the State to be unconstitutional, it was repealed by an amendment, passed in 1877, which required such companies as had accepted and complied with its provisions to be assessed anew under the other sections of the act of 1875, credit to be given for sums paid by them, and any excess to be refunded. In a suit by the company to restrain the assessment and collection of the tax, — *Held*, that the Constitution of 1870, as construed by the highest judicial authority in the State, required all property to be uniformly taxed; and hence the legislature could not, in 1875, bind the State not to tax the company otherwise than as that

section provides, upon the surrender by the company of its charter exemptions. Said amendment, so far as it subjected the property to taxation after March 28, 1877, did not, therefore, impair the obligation of a contract.

3. A., a railroad company, was by its charter invested, "for the purpose of *making and using said road*, with all the powers, rights, and privileges, and subject to all the disabilities and restrictions, that have been conferred and imposed upon" company B. The latter was by its charter exempt from taxation upon its capital stock for ever, and upon its road, fixtures, &c., for a term of years. *Held*, that the grant to A. did not include immunity from taxation.

ERROR to the Supreme Court of the State of Tennessee.

This was a suit in equity commenced in the Chancery Court of Davidson County, Tennessee, by three railroad companies, the Memphis and Charleston Railroad Company, the Mobile and Ohio Railroad Company, and the Knoxville and Charleston Railroad Company, plaintiffs in error, to restrain the defendants, who are officers of the State, from assessing and collecting taxes upon the property of the several corporations, under the provisions of "An Act declaring the mode and manner of valuing the property of a railroad company for taxation," passed March 20, 1875 (Acts 1875, p. 3100), as amended by "An Act to amend 'An Act entitled an act . . .' passed March 20, 1875, and to adjust the rights of the State and railroads in Tennessee under the decision of the Supreme Court, holding that the eleventh section of said act is unconstitutional," passed in March, 1877. Acts 1877, p. 83.

The section of the act of 1875, important to the consideration of this case, is, —

"SECT. 11. That each and every railroad company which will accept as a special amendment to its charter for a period of ten years from the first day of January, 1875, and that will pay annually to the treasurer of the State one and one-half per cent on the gross receipts from all sources of such company, shall be exempt from the provisions of the foregoing sections of this act, and the payment of said one and one-half per cent upon all gross earnings of such road shall be in full of all taxation. . . . Such railroads as do not accept the provisions of this section shall be taxed as provided for in the foregoing sections of this act: *Provided*, that the charters of all railroad companies accepting the provisions of this section shall be hereby so amended that after the expiration of said ten years no exemp-

tions of any property of said railroad company shall exist, but be placed upon the same footing as the property of other corporations or individuals. The charters of all railroad companies accepting the provisions of this section are hereby so amended that, after the lapse of the ten years aforesaid, every provision contained in the provisions of the charter of said companies exempting their property from taxation is hereby declared null and void, in as full and ample a manner as if the same was especially set forth in their respective charters."

Art. 2, sect. 28, of the Constitution of Tennessee, which took effect in 1870, is as follows: —

"All property, real, personal, or mixed, shall be taxed; but the legislature may except such as may be held by the State, by counties, cities, or towns, and used exclusively for public or corporation purposes, and such as may be held and used for purposes purely religious, charitable, scientific, literary, or educational; and shall except $1,000 worth of personal property in the hands of each taxpayer, and the direct products of the soil in the hands of the producer and his immediate vendee. All property shall be taxed according to its value, that value to be ascertained in such manner as the legislature shall direct, so that taxes shall be equal and uniform throughout the State. No one species of property from which a tax may be collected shall be taxed higher than any other species of property of the same value. But the legislature shall have power to tax merchants, pedlers, and privileges in such manner as they may from time to time direct. . . ."

"SECT. 29. The General Assembly shall have power to authorize the several counties and incorporated towns in this State to impose taxes for county and corporation purposes respectively, in such manner as shall be prescribed by law; and all property shall be taxed according to its value upon the principles established in regard to State taxation."

Art. 11, sect. 8, is as follows: —

"The legislature shall have no power to suspend any general law for the benefit of any particular individual, nor to pass any law for the benefit of individuals inconsistent with the general laws of the land; nor to pass any law granting to any individual or individuals, rights, privileges, immunities, or exemptions other than such as may be by the same law extended to any member of the community who may be able to bring himself within the provisions of such law. No corporation shall be created, or its powers increased or diminished,

by special laws; but the General Assembly shall provide by general laws for the organization of all corporations hereafter created, which laws may, at any time, be altered or repealed; and no such alteration or repeal shall interfere with or divest rights which have become vested."

On the 8d of February, 1877, the Supreme Court of Tennessee decided, in the case of *Ellis* v. *The Louisville & Nashville Railroad Co.*, not yet reported in the current series of reports, that the eleventh section of the Railroad Taxation Act of 1875 was unconstitutional and void, except perhaps as to corporations exempt from taxation by the terms of their charters and accepting the section, because it did not impose a tax upon the property of railroad companies equal and uniform with that imposed upon the property of individuals.

After this decision the amendment of 1877 was passed, by which sect. 11 of the act of 1875 was repealed, and the railroad tax assessors were required to assess all railroads in the State for the years 1877 and 1878, under the first ten sections of the act of 1875; and where any railroads had not been assessed under such sections "by reason of having accepted and complied with the provisions of the eleventh section of said act, or for any other cause," they were to be assessed for the years 1875 and 1876, as well as 1877 and 1878. Sect. 8. All railroads which had accepted and complied with the provisions of the eleventh section of the act of 1875 were allowed a credit for the sums paid under that section on the amounts assessed for the years 1875, 1876, 1877, and 1878, and if the sums paid exceeded the assessments for those years the excess was to be refunded with interest. Sect. 9.

Sect. 38 of the charter of the Memphis and Charleston Railroad Company is as follows: —

"The capital stock of said company shall be for ever exempt from taxation, and the road, with all its fixtures and appurtenances, including workshops, machinery, and vehicles of transportation, shall be exempt from taxation for the period of twenty years from the completion of the road, and no longer."

This company completed its road March 28, 1857. It also accepted the provisions of the eleventh section of the act of

1875, and paid the treasurer of State, Jan. 10, 1876, the one and one-half per cent of its gross earnings for the year 1875, amounting to $5,691, and, Jan. 10, 1877, $5,581, the percentage for 1876.

After the passage of the act of 1877, the State officers proceeded to make a valuation of the property of the company, and were taking the necessary steps to provide for the levy and collection of taxes. This suit was commenced to restrain such action, and the grounds for relief as alleged were, —

1. That the exemption of the capital stock of the company was an exemption of all the property of the company which had been procured with the capital.

2. That even if this were not so, the property of the company was exempt under its charter until March 28, 1877.

3. That by its acceptance of the eleventh section of the act of 1875 as an amendment to its charter, the company was exempt from any other taxation than that prescribed by that section, from January, 1875, until January, 1885.

The Supreme Court of the State decided, upon appeal, in respect to this company, that the acceptance of sect. 11 of the act of 1875 did not relieve the company from taxation under the first ten sections of the act of 1875, as amended in 1877, because that section was unconstitutional and void; that both the capital stock and the property of the company were, by the charter, exempt from all taxation until March 28, 1877; that after that date the property of the company was taxable under the act of 1875, as amended; and that, in settlement of the taxes to be levied for the years 1877 and 1878, the company was entitled to an allowance for the sums paid in 1876 and 1877, under that section.

Sect. 11 of the charter of the Mobile and Ohio Railroad Company provides as follows: —

"That the capital stock of said company shall be for ever exempt from taxation, and the road, with all its fixtures and appurtenances, including workshops, warehouses, and vehicles of transportation, shall be exempt from taxation for the period of twenty-five years from the completion of the road, and no tax shall ever be laid on said road or fixtures which will reduce dividends below eight per cent."

The road of this company was not completed until April 22, 1861, and the court below decided that both its capital stock and its tangible property were exempt from taxation until April 22, 1886, and as that relieved the company from taxation under the act of 1875, as amended, until after the year 1886, and the defendants in the suit were only proceeding to make an assessment for the years 1875, 1876, 1877, and 1878, an injunction was granted restraining the assessments until 1886, and leaving all questions after that time open.

The Knoxville and Charleston Railroad Company was incorporated Feb. 18, 1858. Sect. 58 of its charter is as follows: —

"The said company is hereby invested, for the purpose of making and using said road, with all the powers, rights, and privileges, and subject to all the disabilities and restrictions, that have been conferred and imposed upon the Nashville and Chattanooga Railroad Company in its original charter."

The charter of the Nashville and Chattanooga Railroad Company contained all the usual and ordinary provisions found in railroad charters, authorizing the construction and use of railroads, and also contained an exemption from taxation like that in sect. 88 of the charter of the Memphis and Charleston Railroad Company. The Knoxville and Charleston Company claimed exemption from taxation under the amended law of 1875, on account of the exemption clause in the charter of the Nashville and Chattanooga Company; but the court below held otherwise, on the ground that the exemption of the Nashville and Chattanooga Company was not one of the "rights and privileges" granted to the Knoxville and Charleston Company.

To reverse the judgment of the Supreme Court of Tennessee, the companies sued out this writ, and assign for error that the Supreme Court of Tennessee erred, —

1. In adjudging that the eleventh section of the act of March 20, 1875, the provisions of which had been accepted, and by its terms had become a part of the charter of the Memphis and Charleston Railroad, was unconstitutional and void, as being violative of the rule of equality and uniformity of taxation prescribed and required by par. 28, art. 2, of the Consti-

tution of 1870. It furthermore erred in holding that the repealing act of March 20, 1877, was constitutional and valid, and not violative of the chartered rights of these several companies.

2. In decreeing that the roads of the companies, with their fixtures and appurtenances, including shops, warehouses, and vehicles of transportation, whether built and purchased by the capital stock or not, were, under said act of 1877, liable to taxation after the expiration of twenty years, and twenty-five years from the completion of the respective roads.

3. In decreeing that the Knoxville and Charleston Railroad Company was liable to taxation under the acts of 1875 and 1877, and was not entitled to any exemption.

4. In not decreeing that the Mobile and Ohio Railroad Company should never be subjected to any taxation which would reduce its dividends below eight per cent.

Mr. W. Y. C. Humes for the plaintiff in error.

According to the settled judicial construction as well as the popular import of "capital stock," the term, where it occurs in the charters of these companies, must be held to signify the property purchased therewith and represented thereby. Such stock exists only nominally. The property it represents is the tangible reality. Burrough, Taxation, 142. If the charters were silent on the subject, and the general laws of the State controlled, a tax could not be assessed upon the stock and upon such property, whether the latter consisted of real estate, rolling-stock, the road-bed, or the fixtures therewith connected, as double taxation would be thereby imposed. It therefore necessarily follows that the perpetual exemption of the stock from taxation extends to such property. *Gordon* v. *Baltimore*, 5 Gill (Md.), 286; *Baltimore* v. *Baltimore & Ohio Railroad Co.*, 6 id. 294; *State* v. *Cumberland & Pennsylvania Railroad*, 40 Md. 51; *Bedford* v. *Mayor of Nashville*, 7 Heisk. (Tenn.) 413; *Iron City Bank* v. *Pittsburg*, 37 Pa. St. 340; *Connersville* v. *Bank of Indiana*, 16 Ind. 105; *Sebring* v. *City of Charleston*, 5 Rich. (S. C.) Eq. 561; *State* v. *Hood*, 15 Rich. (S. C.) 178; *Ordinary of Bibb County* v. *Central Railroad et al.*, 40 Ga. 646; *Douglass* v. *State, &c.*, 34 N. J. L. 485; *State, &c.* v. *Haight*, id. 128; *Richmond* v. *Richmond & Danville Railroad Co.*, 21

Gratt. (Va.) 604; *Union Bank* v. *State*, 9 Yerg. (Tenn.) 489; *New Haven* v. *City Bank*, 31 Conn. 108; *Hannibal & St. Joseph Railroad Co.* v. *Shacklett*, 30 Mo. 550; *Wilmington Railroad* v. *Reid*, 13 Wall. 264.

To give full effect to the entire charter, the specifically enumerated property which is exempt but for a limited period must be confined to such as was purchased or constructed with money, not constituting a part of the fund, subscribed by the corporators, but borrowed pursuant to the power which the charter conferred upon the companies. Otherwise, we must ignore the cardinal rule of construction, which requires that the different provisions of a statute should, if possible, be reconciled, so as to make the whole consistent and harmonious. The court below rendered nugatory and unmeaning the positive and unequivocal provision in regard to the capital stock, by holding that the property which it represents was rightfully subject to taxation after the expiration of that period.

The capital stock of the Memphis and Charleston Railroad Company and of the Mobile and Ohio Railroad Company is $10,633,325. The bonded debt, secured by mortgages, which was incurred in procuring the means to complete the construction of their roads and to purchase other property appurtenant thereto, is $16,295,677.05. By giving to each clause its full meaning, the works and property of the respective companies to the latter amount would be taxable after that period; but so much of them as was paid for out of the capital stock would be perpetually exempt. Any other interpretation practically nullifies the first clause of the section, by depriving the capital stock of the immunity thereby conferred.

The Mobile and Ohio Railroad Company has also a further provision, relieving it from any taxation which "would reduce dividends below eight per cent." It has not for years declared dividends, and its condition will not justify it in doing so. The State claims the right, nevertheless, to subject the property to taxation. The cases in this court are conclusive against the right. *Raleigh & Gaston Railroad Co.* v. *Reid*, 13 Wall. 269; *Pacific Railroad Co.* v. *Maguire*, 20 id. 36.

The act of 1877 is a palpable violation of the contract contained in these charters, and no question is made by the

defendants as to the power of the legislature to grant them under the Constitution of 1834.

It remains to consider the effect of the eleventh section of the act of March 20, 1875. The Memphis and Charleston Railroad Company, by accepting it, entered with the State into a contract, which is binding, unless it infringes some constitutional limitation upon the legislative power.

It is submitted —

1. That the charter of the company, with all the exemptions thereby conferred, was in full force when the Constitution of 1870 took effect.

2. By the section, the State purchased from the company its surrender of the exemptions, and thus secured an immediate annual revenue of one and one-half per cent upon its gross earnings, by stipulating that that percentage should be the measure of taxation for the ensuing ten years.

3. An adequate consideration having been thus paid, the case falls within the rule announced in *State Bank of Ohio* v. *Knoop*, 16 How. 169.

4. The constitutional provision respecting equality and uniformity of taxation does not apply to property wholly exempt from taxation, as this confessedly was, then and for years afterward. Even if no such exemption existed, the legislature could, under the existing Constitution, make a valid contract with the company for a fixed percentage on its gross earnings, in commutation for all taxes on its property for a specific period. Burrough, Taxation, 137; *Illinois Central Railroad Co.* v. *McLean County*, 17 Ill. 291; *Hanaacker* v. *Wright*, 30 id. 148; *State Bank* v. *People*, 5 id. 303; *People* v. *Berger*, 62 id. 452; *Supervisors* v. *Campbell*, 42 id. 490; *Louisiana State Lottery* v. *City of New Orleans*, 24 La. Ann. 86; *Louisville & Nashville Railroad Co.* v. *Tennessee*, 8 Heisk. (Tenn.) 798.

5. The Supreme Court declared the section to be unconstitutional, after the company had in good faith accepted its terms, and paid for two years the stipulated consideration. The company claims that its acceptance created a contract, the obligation of which was impaired by subsequent legislation. A Federal question thus arises; and, in determining the points

which it involves, this court is not, in regard to any of them, bound by the decision of the State court.

If, however, the section is held to be not authorized by the Constitution of 1870, the question as to the exemption under the original charters will remain.

The Knoxville and Charleston Railroad Company had, for the purpose of making and using her road, all the rights and privileges granted to the Nashville and Chattanooga Railroad Company by its original charter, which provided for an exemption of its capital stock for ever, and of its road and property for twenty years from the completion of the road. The road is not yet completed. *Humphrey* v. *Pegues* (16 Wall. 244) is almost identical with this case. It was there held that the grant of the rights and privileges to one company which were possessed by another carried with it the exemption from taxation which the latter enjoyed. So in *Morgan* v. *Louisiana* (93 U. S. 217), Mr. Justice Field says, "Immunity of particular property from taxation is a privilege which may sometimes be transferred under that designation, as held in *Humphrey* v. *Pegues*, 16 Wall. 244. All that we now decide is, that such immunity is not itself a franchise of a railroad corporation, which passes as such, without other description, to a purchaser of its property." p. 224. The only question then under consideration was, whether by a sale of the property and franchises of a railroad company under a decree of foreclosure, or under an execution sued out upon a money judgment rendered against it, an immunity from taxation conferred by the charter would accompany the property when transferred to the purchaser. The court decided that it would not, as it was a "personal privilege of the company, and not transferable." The soundness of the rule in *Humphrey* v. *Pegues*, as to what passes when the "rights and privileges" which one company possesses are granted to another by a legislative enactment, was not doubted, nor has it been in any subsequent case.

Lexicographers define "privilege" to be an exemption or immunity from some general burden; a peculiar advantage or benefit. The right and privilege to "make and use" a railroad free from taxation, vested in the Nashville and Chatta-

nooga Company, were granted to the Knoxville and Charleston Company.

Mr. J. B. Heiskell, contra.

MR. CHIEF JUSTICE WAITE, after stating the case, delivered the opinion of the court.

The claims of the several corporations will be considered separately, and in the order they are presented by the record.

I. THE MEMPHIS AND CHARLESTON RAILROAD COMPANY.

1. As to the extent of the exemption contained in the original charter.

Under this branch of the case the company claims that the exemption of the capital stock from taxation is equivalent to an exemption of the property purchased with or represented by the capital, and there are undoubtedly many cases to be found in this and other courts where it has been held that an exemption of the capital stock of a corporation from taxation was equivalent to an exemption of the property into which the capital had been converted. But in all these cases we think it will be found that the question turned upon the effect to be given the term "capital," or "capital stock," as used in the particular charter under consideration, and that when the property has been exempted by reason of the exemption of the capital, it has been because, taking the whole charter together, it was apparent that the legislature so intended. Thus the capital stock of a bank usually consists of money paid in to be used in banking, and an exemption of such capital stock from taxation must almost necessarily mean an exemption of the securities into which the money has been converted in the regular course of a banking business. And in general, an exemption of capital stock, without more, may, with great propriety, be considered, under ordinary circumstances, as exempting that which, in the legitimate operations of the corporation, comes to represent the capital.

But in this case, while the capital stock is for ever exempt, the "road, with all its fixtures and appurtenances, including workshops, warehouses, and vehicles of transportation," is

exempt for only twenty years after the completion of the road. Clearly, under such circumstances, it could not have been understood that the enumerated property was to represent the capital for the purposes of taxation. Exemptions are never to be presumed. On the contrary, the presumptions are always against them. The exemption of the property for twenty years only is equivalent to an express power to tax after that time.

It is said, however, that both provisions of the statute can stand, — that which exempts the capital and that which taxes the tangible property, — if the part of the property which represents the capital is exempted, and that which represents the bonded debt is taxed; but we certainly have no clear manifestation of any such intention by the legislature. It is as distinctly stated that the road and *all* its fixtures, &c., are to be taxed as that the capital is to be exempt. While the company had power to borrow money on mortgage, it is very clear from the provisions of the charter it was expected the road might be completed with capital alone. Sect. 17, in which the power to mortgage is given, is as follows: "The said company may at any time increase its capital stock to a sum sufficient to complete the road and stock it with every thing necessary to give it full operation and effect, either by opening books for new stock, or by selling such new stock, or by borrowing money on the credit of the company and on mortgage of its charter and works; and the manner in which the same shall be done, in either case, shall be prescribed by the stockholders at a general meeting. . . ." Under these circumstances, it cannot for a moment be doubted that if the legislature had supposed a different rule of taxation was to be applied if the road was built with borrowed money, from what should be if it was built from stock, some mention would have been made of it, and some means provided for determining what was exempt as representing stock, and what taxable as representing debt. Then again, suppose the debt paid off, either by the issue of new stock or the earnings of the road, would the property then be exempt as capital, or taxable because originally built with borrowed money?

Without pursuing this subject further, it is sufficient to say

that we are clearly of the opinion that the road, with all its fixtures, &c., was taxable under the original charter after March 28, 1877, and that, whatever else was exempted as capital stock, this was not.

2. As to the effect of the acceptance of the eleventh section of the act of 1875, and the payment of taxes thereunder for the years 1875 and 1876.

The claim on the part of the company is, that by the acceptance of this section as an amendment to its charter, a valid contract was entered into between the State and the corporation, regulating the taxation of the company until the year 1885. It is said that the release by the company of the perpetual exemption of its capital stock, and of the exemption of its property until 1877, which were granted by the original charter, was a sufficient consideration for an agreement, on the part of the State, not to tax the company otherwise than according to the accepted eleventh section for ten years, and that a law which provides for taxation in a different manner impairs the obligation of that contract.

The decision of the Supreme Court of the State declaring this section to be invalid, so far as it relates to companies not claiming to be exempt from taxation under their charters, because it does not conform to the constitutional requirement of uniformity, is binding upon us as a construction of a State statute by the highest court of the State. While we are not bound by the decision in the present case, that the section is also invalid as to this company after the expiration of the time to which the exemption of its property was limited by its charter (*Jefferson Branch Bank* v. *Skelly*, 1 Black, 436; *Bridge Proprietors* v. *Hoboken Company*, 1 Wall. 116), the decision ought not to be overruled, unless it is clearly wrong. The delicate power which we have, under the Constitution of the United States, over the judgments of the State courts, ought always to be used with the greatest caution. There should be no reversal of such judgments, unless the error is manifest.

The Constitution of Tennessee adopted in 1870 requires that all property shall be taxed. After that Constitution went into effect, no valid contract could be made with a corporation for an exemption from taxation. So the courts of Tennessee have

held, and in so doing have established a rule of decision for us. The property of this company was only exempt by its charter until March 28, 1877. The Constitution did not and could not interfere with this exemption so long as it lasted. This the Supreme Court of the State decided. To that extent the claim of the company was sustained.

If nothing had been done until the charter exemption expired, it is clear that, under the construction which the courts of the State have given the Constitution, no contract for the taxation of the company according to the provisions of the eleventh section of the act of 1875 could have been sustained. The only question, therefore, which remains, is, whether in 1875 the legislature could contract for the surrender of the remaining charter exemptions by binding the State not to tax the company for ten years in any other manner than that provided for in sect. 11.

The Constitution has subjected all property in the State to the burden of uniform taxation according to its value. So the courts of the State have decided. The legislature has no power to contract for relief from this burden. It could not do it for a money consideration, and if not for that, clearly not for any other. This is one of the disabilities under which the people of the State have placed their government. But for it taxes might have been commuted or they might have been withheld.

There is no doubt of the power of the legislature to contract with the company for a surrender of its charter exemptions in a way that did not involve a release from the constitutional mode of taxation after the charter exemption had expired. Such a release is, however, as we think, prohibited by the Constitution, as construed by the highest judicial authority in the State.

This disposes of the case so far as the Memphis and Charleston company is concerned. It is not contended that the act of 1875, as amended in 1877, transcends the power of taxation allowed by the charter after the exemption of the road and its appurtenances has expired, unless they are protected by the exemption of the capital stock. The Supreme Court of the State enjoined all taxation prior to March 28, 1877, and decreed

that the money paid under the provisions of the eleventh section of the act of 1875 should be allowed as a credit upon the taxes of 1877 and 1878, and the excess, if any, refunded with interest. This, as we think, is all the company can require.

II. THE MOBILE AND OHIO RAILROAD COMPANY.

As to this company, the court decided that it was exempt from taxation under its charter until April 22, 1886, and enjoined the assessment and collection of taxes under the laws of 1875 and 1877 until that date. The further provision of the charter in respect to taxation so as to reduce dividends below eight per cent was not passed upon below, and was not involved in the decision as made. For this reason it cannot be considered by us.

III. THE KNOXVILLE AND CHARLESTON RAILROAD COMPANY.

The court below decided that this company did not by its charter become entitled to the privilege of exemption from taxation, which was granted to the Nashville and Chattanooga Company. If this be so, then the judgment was clearly right, and no other question need be considered.

The Knoxville and Charleston Company, for the purpose of making and using its road, was invested with all the powers, rights, and privileges of the Nashville and Chattanooga Company.

In *Humphrey* v. *Pegues* (16 Wall. 244), we held that the grant to one company of "all the powers, rights, and privileges" of another, carried with it an exemption from taxation; but in *Morgan* v. *Louisiana* (93 U. S. 217), that such an exemption did not pass by sale of the franchises of a railroad company. In the last case, Mr. Justice Field, speaking for the court, said, "The franchises of a railroad corporation are rights or privileges which are essential to the operations of the corporation, and without which its road and works would be of little value; such as the franchise to run cars, to take tolls, to appropriate earth and gravel for the bed of its road, or water for its engines, and the like. They are positive rights and privileges, without

the possession of which the road of the company could not be successfully worked. Immunity from taxation is not one of them."

This seems to us conclusive of the present case. The grant here was not of all the rights and privileges of the Nashville and Chattanooga Company, but of such as were necessary for the purpose of making and using the road, or, in other words, the franchises of the company which do not include immunity from taxation.

On the whole, we find no error in the record.

Judgment affirmed.

INDEX.

ACCEPTANCE OF A RESIGNATION. See *Officer of the Army.*

ACCOUNTING. See *Mortgage*, 8; *Swamp and Overflowed Lands*, 1.

ACTION, RIGHT OF. See *Assignee in Bankruptcy*, 1; *Conditions Subsequent.*

ACTION FOR MONEY. See *Jurisdiction*, 1.

ADMIRALTY.

1. A ship in tow of a steam-tug, each having its own master and crew, collided with and sunk a steam-dredge lying at anchor at a proper place, displaying good signal-lights, and having competent lookouts stationed on her decks. The tug and the ship having been libelled and seized, the former gave a stipulation for value for $16,000. Both were found to be at fault; and the court below entered a decree awarding the libellants $24,184.57 damages, with interest and costs, and directing that one half of the amount be paid by the ship, and the remaining half by the stipulators for the tug. *Held*, that the decree should be modified so as to further provide that any balance of the moiety decreed against either vessel, which the libellants shall be unable to collect, shall be paid by the other, or by her stipulators, to the extent of her stipulated value beyond the moiety due from her. *The "Virginia Ehrman" and the "Agnese,"* 309.
2. A steamboat collided with and sunk a schooner towed by a tug. The owner of the schooner and the owner of her cargo severally libelled the steamboat and tug, both of which were found to be in fault. *Held*, that each libellant was entitled to a decree against each of the offending vessels for a moiety of his damages, and for interest and costs, with a proviso that if either of said vessels was unable to pay such moiety, then he should have a remedy over against the other vessel for any balance thereof which might remain unpaid. *The "City of Hartford" and the "Unit,"* 323.
3. *The Alabama and the Game-cock* (92 U. S. 695) and *The Virginia Ehrman and the Agnese* (*supra*, p. 309) reaffirmed. *Id.*

AID AND COMFORT TO THE REBELLION. See *Rebellion, The*, 1–4.

ALABAMA.

The provision in the Constitution of Alabama, which declares that "corporations may be formed under general laws, but shall not be created by special acts, except for municipal purposes," does not prohibit the legislature from passing a special act changing the name of an existing railroad corporation, and giving it power to purchase additional property. *Wallace* v. *Loomis*, 146

ALLEGIANCE. See *Rebellion, The*, 1–4.

AMNESTY. See *Rebellion, The*, 3, 4.

APPEAL. See *Practice*, 8.

ARMY. See *Criminal Law; Officer of the Army.*

ARTICLES OF WAR. See *Criminal Law*, 1.

ASSIGNEE IN BANKRUPTCY. See *Judgment in Personam; Mortgage*, 3.

1. Where cotton was captured by the military forces of the United States and sold, and the proceeds were paid into the treasury, the claim of the owner against the government constitutes property, and passes to his assignee in bankruptcy, though, by reason of the bar arising from the lapse of time, it cannot be judicially enforced. *Erwin* v. *United States*, 392.
2. The act of Congress of Feb. 26, 1853 (10 Stat. 170), to prevent frauds upon the treasury of the United States, applies only to cases of voluntary assignment of demands against the government. The passing of claims to heirs, devisees, or assignees in bankruptcy is not within the evil at which it aimed. *Id.*

ASSIGNMENT. See *Assignee in Bankruptcy*, 2; *Claims against the United States.*

AUTREFOIS CONVICT. See *Criminal Law*, 5.

AWARD. See *Referees*, 4.

BAD FAITH. See *Bailment*, 1; *Contracts*, 4.

BAILMENT.

1. Forty-four record-books, some deeds, mortgages, and other papers of a county having been stolen, the county officers deposited $3,500 in the hands of A., upon condition that it should, upon the return of the stolen property, be paid to the person causing the return. It was also stipulated that the failure to "deliver some small paper or papers" should not invalidate the agreement. Within the time limited, A. received a paper, signed by the deputy-sheriff of the county, acknowledging the receipt of the record-books, "also papers

BAILMENT (*continued*).

and small index-books." He thereupon paid the money to the person presenting the receipt. The county then brought suit against A to recover the money, alleging that some of the books were, upon their return, in such a damaged condition as to be rendered comparatively worthless, and that he had, therefore, not performed his contract. *Held*, that A., being a simple bailee of the money deposited in his hands, without compensation, was not, in the absence of bad faith on his part, responsible for the condition of the property at the time of its return. *Eldridge* v. *Hill*, 92.

2. An incorporated company entered into a contract with A., the owner of letters-patent for an explosive compound called "dualin," whereby he undertook to manufacture it, as required by the company from time to time, in quantities sufficient to supply the demand for the same, and all sales produced or effected by the company. The contract provided that all goods he manufactured should be consigned to the company for sale, and all orders he received should be transferred to it to be filled; that the parties should equally share the net profits arising from such sales, and equally bear all losses by explosion, or otherwise, so far as the loss of the dualin was concerned, but the company assumed no risk on A.'s building or machinery; that the company should, semi-monthly, advance to him, on his requisition, a stipulated sum, for paying salaries, for labor, and for his personal account, and such further reasonable sums as might be required for incidental expenses of manufacture; and should furnish him all the raw materials needed to manufacture said explosive in quantities sufficient to supply the demand created by the company, or should advance the money necessary to purchase them, — the said advances and the cost of such materials to be charged to him against the manufactured goods to be by him consigned to the company. Certain of the materials which had been furnished him under the contract, and others which he had purchased with money advanced by the company, were seized upon an execution sued out on a judgment against him in favor of a third party. The company then brought this action, to recover for the wrongful conversion of the materials so seized. *Held*, that the delivery of them by the company to A. did not create a bailment, but that, upon such delivery, they, as well as those purchased by him with the money so advanced, became his sole property, and, as such, were subject to the execution. *Powder Company* v. *Burkhardt*, 110.

BANKRUPTCY. See *Assignee in Bankruptcy*.

1. In order to invalidate, as a fraudulent preference within the meaning of the Bankrupt Act, a security taken for a debt, the creditor must have had such a knowledge of facts as to induce a reasonable belief of his debtor's insolvency. It is not sufficient that he had some cause to suspect such insolvency. *Grant* v. *National Bank*, 80.

BANKRUPTCY (*continued*).

2. The sale of a bankrupt's property under proceedings in involuntary bankruptcy cannot be invalidated by the fact that he, before their commencement, had promised to pay in full his debt to a creditor who, at his instance, instituted them. *Wallace* v. *Loomis*, 146.

BILL OF EXCEPTIONS. See *Jurisdiction*, 10.

A paper incorporated in the record, and certified to be a part thereof by the court below, if it has all the requisites of a bill of exceptions, will be considered here as such, although it be otherwise entitled. *Herbert* v. *Butler*, 319.

BOND. See *Clearance*, 1–3; *Estoppel*, 1; *Jurisdiction; Municipal Bonds; Pleading*, 2.

1. Where bonds of a corporation, as prepared for issue and sale, promise payment in lawful money, and, as such, were guaranteed by a State, a stipulation that they shall be paid in coin, subsequently indorsed on them by the corporation, in accordance with the requirement of purchasers from it, is supplementary and subsidiary, and binds only the corporation itself. *Wallace* v. *Loomis*, 146.

2. Duties imposed upon an officer, different in their nature from those which he was required to perform at the time his official bond was executed, do not render it void as an undertaking for the faithful performance of those which he at first assumed. It will still remain a binding obligation for what it was originally given to secure. *Gaussen* v. *United States*, 584.

BREACH. See *Condition Subsequent*.

BRITISH SUBJECT. See *Rebellion, The*, 1–4.

BURDEN OF PROOF. See *Infringement*, 2; *Internal Revenue*, 5; *Mortgage*, 4; *Practice*, 6.

CALIFORNIA, CLAIM TO LANDS IN. See *Mexican Land-Grants*.

CAPTURE. See *Rebellion, The*, 1–4.

CAPTURED AND ABANDONED PROPERTY. See *Assignee in Bankruptcy*, 1; *Rebellion, The*, 1–4.

CHARTER. See *Constitutional Law*, 1–7, 14; *Jurisdiction; Taxation, Exemption from*.

CHARTER-PARTY. See *Contracts*, 2, 8.

CHROMO-LITHOGRAPHS. See *Imports, Duties on*, 1.

CIRCUIT JUDGE. See *Jurisdiction*, 7.

CITIZENSHIP. See *Jurisdiction*, 8, 9, 10, 12.

CLAIMS AGAINST THE UNITED STATES. See *Assignee in Bankruptcy*.

A. employed B. to collect a claim against the United States. Before its allowance, or the issue of a warrant for its payment, he drew, in

CLAIMS AGAINST THE UNITED STATES (*continued*).

favor of C., an order on B., payable out of any moneys coming into his hands on account of said claim. B. accepted it, and D. became the holder of it in good faith and for value. A. refused to recognize its validity after the warrant in his favor had been issued, or to indorse the latter. D. thereupon filed his bill against A. and B. to enforce payment of the order. *Held*, 1. That the order became, upon its acceptance, and in the absence of any statutory prohibition, an equitable assignment *pro tanto* of the claim. 2. That, under the act of Feb. 26, 1863 (10 Stat. 170, re-enacted in sect. 3477, Rev. Stat.), the accepted order was void, and that D. took no interest in the claim, and acquired no lien upon the fund arising therefrom. *Spofford* v. *Kirk*, 484.

CLEARANCE.

1. The third section of the act of May 20, 1862 (12 Stat. 404), authorized the Secretary of the Treasury to require reasonable security that goods should not be transported in vessels to any place under insurrectionary control, nor in any way be used in giving aid or comfort to the enemy, and to establish such general regulations as he should deem necessary and proper to carry into effect the purposes of the act. *Held*, that a bond taken by the collector of the port of New York, under regulations established by the Secretary of the Treasury, from a shipper and two sureties, in double the value of the goods shipped, to prevent such transportation and use, comes within the reasonable security specified in said third section. *United States* v. *Mora*, 413.
2. The right of the collector to refuse a clearance altogether included that to exact a bond. Such bond, when duly executed, is *prima facie* evidence that it was voluntarily entered into. *Id.*
3. Where the conditions of a bond which are not sustainable are severable from those which are, the latter hold good *pro tanto*, and evidence to show a breach of them is admissible. *Id.*

COIN. See *Bond*, 1.

COLLECTOR OF CUSTOMS. See *Clearance*, 1–3.

The twenty-first section of the act of Congress of March 2, 1799 (1 Stat. 644), makes it the duty of collectors of customs "to pay to the order of the officer, who shall be authorized to direct the payment thereof, the whole of the moneys which they may respectively receive" by virtue of that act. *Held*, that payments and disbursements of moneys received in his official capacity, if made by direction of the Secretary of the Treasury, are within the range of the duty of a collector of customs. *Gaussen* v. *United States*, 584.

COLLECTOR OF INTERNAL REVENUE. See *Probable Cause, Certificate of.*

COLLISION. See *Admiralty.*

COMMERCE. See *Constitutional Law*, 5, 13.

COMMINUTED GLUE. See *Letters-patent*, 1–3.

COMPENSATORY DAMAGES. See *Letters-patent*, 16.

CONDEMNATION. See *Imports, Duties on*, 3.

CONDITION PRECEDENT. See *French and Spanish Land-Grants*, 1–3; *Municipal Bonds*, 2, 3; *Pleading*, 2.

CONDITION SUBSEQUENT.

The breach of conditions subsequent, which are not followed by a limitation over to a third person, does not, *ipso facto*, work a forfeiture of the freehold estate to which they are annexed. It only vests in the grantor, or his heirs, a right of action which cannot be transferred to a stranger, but which they, without an actual entry or a previous demand, can enforce by a suit for the land. *Ruck* v. *Rock Island*, 693.

CONFEDERATE SOLDIER. See *Rebellion, The*, 5.

CONFEDERATE STATES. See *Jurisdiction*, 5.

CONSIGNOR AND CONSIGNEE. See *Bailment*, 2.

CONSTITUTIONAL LAW. See *Rebellion, The*, 5; *Taxation, Exemption from*, 2; *Taxes, Enforcement of the Payment thereof*, 1.

1. An act of the legislature of Massachusetts, passed Feb. 1, 1828, to incorporate the Boston Beer Company, "for the purpose of manufacturing malt liquors in all their varieties," declared that the company should have all the powers and privileges, and be subject to all the duties and requirements, contained in an act passed March 3, 1809, entitled "An Act defining the general powers and duties of manufacturing corporations," and the several acts in addition thereto. Said act of 1809 had this clause: "*Provided always*, that the legislature may from time to time, upon due notice to any corporation, make further provisions and regulations for the management of the business of the corporation and for the government thereof, or wholly to repeal any act or part thereof, establishing any corporation, as shall be deemed expedient." In 1829, an act repealing that of 1809, and all acts in addition thereto, and reserving similar power, was passed. Under the prohibitory liquor law of 1869, certain malt liquors belonging to the company were seized as it was transporting them to its place of business in said State, with intent there to sell them, and they were declared forfeited. *Held*, 1. That the provisions of the act of 1809, touching the power reserved by the legislature, having been adopted in the charter, were a part of the contract between the State and the company, rendering the latter subject to the exercise of that power. 2. That the contract so contained in the charter was not affected by the repeal of that act, nor was its obligation impaired by the prohibitory liquor law of 1869. *Beer Company* v. *Massachusetts*, 25.

2. The company, under its charter, has no greater right to manufacture

CONSTITUTIONAL LAW (*continued*).
or sell malt liquors than individuals possess, nor is it exempt from any legislative control therein to which they are subject. *Id.*

8. All rights are held subject to the police power of a State; and, if the public safety or the public morals require the discontinuance of any manufacture or traffic, the legislature may provide for its discontinuance, notwithstanding individuals or corporations may thereby suffer inconvenience. *Id.*

4. As the police power of a State extends to the protection of the lives, health, and property of her citizens, the maintenance of good order, and the preservation of the public morals, the legislature cannot, by any contract, divest itself of the power to provide for these objects. *Id.*

5. While the court does not assert that property actually in existence, and in which the right of the owner has become vested when a law was passed, may, under its provisions, be taken for the public good without due compensation, nor lay down any rule at variance with its decisions in regard to the paramount authority of the Constitution and laws of the United States, relating to the regulation of commerce with foreign nations and among the several States, or otherwise, it reaffirms its decision in *Bartemeyer* v. *Iowa* (18 Wall. 129), that, as a measure of police regulation, a State law prohibiting the manufacture and sale of intoxicating liquors is not repugnant to any clause of that Constitution. *Id.*

6. It appearing from the record that the point, that the prohibitory liquor law of 1869 impaired the obligation of the contract contained in the charter of the company, was made on the trial of the case, and decided adversely to the company, and was afterwards carried, by bill of exceptions, to the Supreme Court of Massachusetts, where the rulings of the lower court were affirmed, this court has jurisdiction. *Id.*

7. The State of Tennessee having, in 1838, organized the Bank of Tennessee, agreed, by a clause in the charter, to receive all its issues of circulating notes in payment of taxes; but, by a constitutional amendment adopted in 1865, it declared the issues of the bank during the insurrectionary period void, and forbade their receipt for taxes. *Held*, that the amendment was in conflict with the provision of the Constitution of the United States against impairing the obligation of contracts. *Keith* v. *Clark*, 454.

8. There is no evidence in this record that the notes offered in payment of taxes by the plaintiff were issued in aid of the rebellion, or on any consideration forbidden by the Constitution or the laws of the United States; and no such presumption arises from any thing of which this court can take judicial notice. *Id.*

9. The political society which, in 1796, was organized and admitted into the Union by the name of Tennessee, has to this time remained the same body politic. Its attempt to separate itself from that Union

CONSTITUTIONAL LAW (*continued*).
did not destroy its identity as a State, nor free it from the binding force of the Constitution of the United States. *Id.*
10. Being the same political organization during the rebellion, and since, that it was before, — an organization essential to the existence of society, — all its acts, legislative and otherwise, during the period of the rebellion, are valid and obligatory on the State now, except where they were done in aid of that rebellion, or are in conflict with the Constitution and laws of the United States, or were intended to impeach its authority. *Id.*
11. If the notes which were the foundation of this suit had been issued on a consideration which would make them void for any of the reasons mentioned, it is for the party asserting their invalidity to set up and prove the facts on which such a plea is founded. *Id.*
12. A tax laid by a State on the amount of sales of goods made by an auctioneer is a tax on the goods so sold. *Cook* v. *Pennsylvania*, 566.
13. The statute of Pennsylvania of May 20, 1853, modified by that of April 9, 1859, requiring every auctioneer to collect and pay into the State treasury a tax on his sales, is, when applied to imported goods in the original packages, by him sold for the importer, in conflict with sects. 8 and 10 of art. 1 of the Constitution of the United States, and therefore void, as laying a duty on imports and being a regulation of commerce. *Id.*
14. An act of the General Assembly of Illinois, approved March 8, 1867, incorporating the Northwestern Fertilizing Company, with continued succession and existence for the term of fifty years, authorized and empowered it to establish and maintain in Cook County, Illinois, at any point south of the dividing line between townships 37 and 38, "chemical and other works, for the purpose of manufacturing and converting dead animals and other animal matter into an agricultural fertilizer, and into other chemical products by means of chemical, mechanical, and other processes," and "to establish and maintain depots in the city of Chicago, in said county, for the purpose of receiving and carrying off from and out of said city any and all offal, dead animals, and other animal matter which it might buy or own, or which might be delivered to it by the city authorities and other persons." The works, before the proprietors of them were incorporated, were located within the designated territory, at a place then swampy and nearly uninhabited, but now forming a part of the village of Hyde Park, and the company established and maintained depots at the city. In March, 1869, the legislature passed an act revising the charter of that village, and conferring upon it the largest powers of police and local government; among them, to "define or abate nuisances which are, or may be, injurious to the public health," provided that the sanitary and police powers thereby conferred should not be exercised against the Northwestern Fertilizing Company in said village until the full expiration of two years from

CONSTITUTIONAL LAW (*continued*).

and after the passage of said act. Nov. 29, 1872, the village authorities adopted the following ordinance: "No person shall transfer, carry, haul, or convey any offal, dead animals, or other offensive or unwholesome matter or material, into or through the village of Hyde Park. Any person who shall be in charge of or employed upon any train or team carrying or conveying such matter or material into or through the village of Hyde Park shall be subject to a fine of not less than five nor more than fifty dollars for each offence;" and Jan. 8, 1873, caused the engineer and other employés of a railway company which was engaged in carrying the offal to the works from the city through the village to be arrested and tried for violating the ordinance. They were convicted, and fined fifty dollars each; whereupon the company filed this bill to restrain further prosecutions, and for general relief. *Held*, 1. That nothing passed by the charter but what was granted in express terms or by necessary intendment. 2. That the charter, although, until revoked, a sufficient license, was not a contract, guaranteeing that the company, notwithstanding its business might become a nuisance by reason of the growth of population around the place originally selected for its works, should for fifty years be exempt from the exercise of the police powers of the State. 3. That the charter affords the company no protection from the enforcement of the ordinances. *Fertilizing Company* v. *Hyde Park*, 659.

CONTRACTS. See *Bailment*, 2; *Constitutional Law*, 1–7, 14; *Estoppel*, 1, *Tax, Enforcement of the Payment thereof*, 1, 4; *Usury*.

1. In 1864, A. entered into two contracts with the United States to deliver a specified number of tons "of timothy or prairie hay" at Fort Gibson, and other points within the Indian Territory, which was then the theatre of hostilities. Each contract contained this clause: "It is expressly understood by the contracting parties hereto, that sufficient guards and escorts shall be furnished by the government to protect the contractor while engaged in the fulfilment of this contract." He cut hay within that Territory; and payments were made to him for that which he delivered and for that which, with other personal property, had been destroyed by the enemy. Having been prevented by the enemy from there cutting all the hay necessary to fulfil his contract, he sued to recover an amount equal to the profits he would have made had the contract been fully performed; and he alleged that the United States did not "furnish sufficient guards and escorts for his protection in the cutting and delivery of said hay." The United States set up as a counter-claim the amount paid him for the loss of the hay and his other personal property. The Court of Claims gave judgment for the claimant, allowing in part the counter-claim. Both parties appealed here. *Held*, 1. That the contract was for the sale and delivery of hay,

CONTRACTS (*continued*).

and not for cutting and hauling grass. 2. That the obligation of the United States to A. was not that of an insurer against any loss he might sustain from hostile forces, but to protect his person and property while engaged in the effort to perform his contract. 3. That A. was entitled to the full value of the property actually lost by him, and having been paid therefor, his petition and the counter-claim should be dismissed. *United States* v. *McKee*, 233.

2. Where the owner of a vessel charters her, there arises, unless the contrary be shown, an implied contract on his part that she is seaworthy and suitable for the service in which she is to be employed. He is therefore bound, unless prevented by the perils of the sea or unavoidable accident, to keep her in proper repair, and is not excused for any defects known or unknown. *Work* v. *Leathers*, 379.
3. A defect in the vessel, which is developed without any apparent cause, is presumed to have existed when the service began. *Id.*
4. A contract between the United States and A., for the transportation by him of stores between certain points, provided that the distance should be "ascertained and fixed by the chief quartermaster," and that A. should be paid for the full quantity of stores delivered by him. Annexed to the contract, and signed by the parties, was a tabular statement fixing the sum to be paid for each one hundred pounds of stores transported. The distance, as ascertained and fixed by the chief quartermaster, was less than by air line, or by the usual and customary route. *Held*, 1. That his action is, in the absence of fraud, or such gross mistake as would necessarily imply bad faith, or a failure to exercise an honest judgment, conclusive upon the parties. 2. That A. was not entitled to compensation, according to the number of pounds received for transportation, in all cases where the loss in weight, occurring during transportation, was without neglect upon his part, but only for the number of pounds actually delivered by him. *Kihlberg* v. *United States*, 398.

CONTRIBUTORY NEGLIGENCE. See *Admiralty*, 1, 2.

CORPORATION. See *Alabama; Bond*, 1; *Constitutional Law*, 1–6; *Estoppel*, 1, 2; *Jurisdiction*, 6, 8; *Municipal Bonds*, 1–6; *Practice*, 10.

1. The officers of a corporation are the custodians of its books; and it is their duty to see that a transfer of shares of its capital stock is properly made, either by the owner himself or by a person having authority from him. In either case, they must act upon their own responsibility. Accordingly, when the name of the owner of a certificate of stock had been forged to a blank form of transfer, and to a power of attorney indorsed on it, and the purchaser of the certificate in this form, using the forged power of attorney, obtained a transfer of the stock on the books of the corporation, — *Held*, in a suit by such owner against the corporation, that he was entitled to

CORPORATION (*continued*).

a decree compelling it to replace the stock on its books in his name, issue a proper certificate to him, and pay him the dividends received on the stock after its unauthorized transfer, or to an alternative decree for the value of the stock, with the amount of the dividends. *Telegraph Company* v. *Davenport*, 369.

2. The negligence of their guardian cannot preclude minors from asserting, by suit, their right to stock belonging to them, which was so sold and transferred. If competent to transfer it, or to approve of the transfer made, they must, to create an estoppel against them, have, by some act or declaration by which the corporation was misled, authorized the use of their names, or subsequently approved such use by accepting the purchase-money with knowledge of the transfer; but under the statute of Ohio, where the minors who are the complainants herein resided, they were not, nor, without the authority of the Probate Court, was their guardian, competent to authorize a sale of their property. *Id.*

COTTON. See *Intercourse and Trade*, 2; *Rebellion, The*, 1–4.

COUNTY. See *Parties*.

COUPONS. See *Municipal Bonds*, 6; *Practice*, 2, 8.

COURT AND JURY. See *Imports, Duties on*, 8; *Internal Revenue*, 5, 8; *Practice*, 8, 6.

COURT OF CLAIMS. See *Rebellion, The*, 2.

COURT OF EQUITY.

A court of equity having jurisdiction of the subject-matter and the parties, when it takes charge of a railroad and its appurtenances, as a trust fund for the payment of incumbrances, has power to appoint managing receivers of the property, and, for its preservation and management, authorize moneys to be raised, and declare the same chargeable as a paramount lien on the fund. *Wallace* v. *Loomis*, 146.

COURTS-MARTIAL. See *Criminal Law*, 1, 5.

COURTS, POWERS OF, TO APPOINT REFEREES. See *Referees*.

CREDITOR. See *Bankruptcy; Illinois; Judgment in Personam; Mortgage*, 1.

CRIMINAL LAW. See *Smuggling*, 1; *States, Police Power of*, 2.

1. The thirtieth section of the act of March 3, 1863 (12 Stat. 731), entitled "An Act for enrolling and calling out the national forces, and for other purposes," did not make the jurisdiction of the military tribunals over the offences therein designated, when committed by persons in the military service of the United States, and subject to the articles of war, exclusive of that of such courts of the loyal

CRIMINAL LAW (*continued*).

States as were open and in the undisturbed exercise of their jurisdiction. *Coleman* v. *Tennessee*, 509.

2. When the territory of the States, which were banded together in hostility to the national government, and making war against it, was in the military occupation of the United States, the tribunals mentioned in said section had, under the authority conferred thereby, and under the laws of war, exclusive jurisdiction to try and punish offences of every grade committed there by persons in the military service. *Id.*
3. Officers and soldiers of the army of the United States were not subject to the laws of the enemy, nor amenable to his tribunals for offences committed by them during the war. They were answerable only to their own government, and only by its laws, as enforced by its armies, could they be punished. *Id.*
4. Unless suspended or superseded by the commander of the forces of the United States which occupied Tennessee, the laws of that State, so far as they affected its inhabitants among themselves, remained in force during the war, and over them its tribunals, unless superseded by him, continued to exercise their ordinary jurisdiction. *Id.*
5. A., charged with having committed murder in Tennessee, whilst he was there in the military service of the United States during the rebellion, was, by a court-martial, then and there convicted, and sentenced to suffer death. The sentence, for some cause unknown, was not carried into effect. After the constitutional relations of that State to the Union were restored, he was, in one of her courts, indicted for the same murder. To the indictment he pleaded his conviction before the court-martial. The plea being overruled, he was tried, convicted, and sentenced to death. *Held*, 1. That the State court had no jurisdiction to try him for the offence, as he, at the time of committing it, was not amenable to the laws of Tennessee. 2. That his plea, although not proper, inasmuch as it admitted the jurisdiction of that court to try and punish him for the offence, if it were not for such former conviction, would not prevent this court from giving effect to the objection taken in this irregular way to such jurisdiction. Accordingly, this court reverses the judgment, and directs the discharge of A. from custody under the indictment. *Id.*

DAMAGES. See *Admiralty*, 1, 2; *Infringement*, 1; *Letters-patent*, 16.

DEATH, PRESUMPTION OF.

1. A person who for seven years has not been heard of by those who, had he been alive, would naturally have heard of him, is presumed to be dead; but the law raises no presumption as to the precise time of his death. *Davis* v. *Briggs*, 628.
2. The triers of the facts may infer that he died before the expiration of the seven years, if it appears that within that period he encoun-

DEATH, PRESUMPTION OF (*continued*).
tered some specific peril, or came within the range of some impending or imminent danger which might reasonably be expected to destroy life. *Id.*

DEBT, ACTION OF. See *Smuggling.*

DECALCOMANIE PICTURES. See *Imports, Duties on*, 1.

DECREE. See *Equity of Redemption; Estoppel*, 8; *French and Spanish Land-Grants*, 6; *Jurisdiction*, 5, 8; *Practice*, 9.

DEED. See *Mortgage*, 1–3.

DE FACTO CORPORATION. See *Municipal Bonds*, 6.

DEMURRER. See *Practice*, 9; *Rebellion, The*, 5.

DEPOSITION. See *Evidence*, 4.

DEVISEE. See *Assignee in Bankruptcy*, 2.

DISMISSAL OF A BILL. See *Practice*, 10.

DISTANCE. See *Contracts*, 4.

DISTILLERY. See *Internal Revenue*, 9.

DISTRICT JUDGE, DISABILITY OF. See *Jurisdiction*, 7.

DISTRICT OF COLUMBIA.

1. The act of the legislative assembly of the District of Columbia of June 26, 1873, exempting from general taxes for ten years thereafter such real and personal property as might be actually employed within said District for manufacturing purposes, provided its value should not be less than $5,000, did not create an irrepealable contract with the owners of such property, but merely conferred a bounty liable at any time to be withdrawn. *Welch* v. *Cook*, 541.
2. Congress, by the act of June 20, 1874 (18 Stat. 117), which superseded the then existing government of the District, declared that for the fiscal year ending June 30, 1875, there should be "levied on all real estate in said District, except that belonging to the United States and to the District of Columbia, and that used for educational and charitable purposes," certain specified taxes. *Held*, that under said act real property used for manufacturing purposes, although within the exemption granted by the act of the legislative assembly, became subject to taxation. *Id.*
3. Congress, in exercising legislation over property and persons within the District of Columbia, may, provided no intervening rights are thereby impaired, confirm the proceedings of an officer in the District, or of a subordinate municipality, or other authority therein, which, without such confirmation, would be void. *Mattingly* v. *District of Columbia*, 687.
4. An act of Congress, approved June 19, 1878 (20 Stat. 166), entitled "An Act to provide for the revision and correction of assessments for special improvements in the District of Columbia, and for other

DISTRICT OF COLUMBIA (*continued*).

purposes," considered, with reference to the preceding legislation of Congress and of the legislative assembly of said District. *Held*, 1. That said act was practically a confirmation of the doings of the board of public works of the District, touching the improvement of streets and roads, and a ratification of the assessments prepared under an act of said assembly of Aug. 10, 1871, as charges upon the adjoining property, and that it conferred authority upon the commissioners to revise and correct such assessments within thirty days after the passage of the act. 2. That such confirmation was as binding and effectual as if authority had been originally conferred by law to direct the improvements and make the assessments. *Id.*

DONATION ACT.

After the passage of the act of July 17, 1854 (10 Stat. 306), amendatory of the act of Sept. 27, 1850 (9 id. 496), commonly known as the Donation Act, a husband and wife, who, by reason of their residence and cultivation, were, under the latter act, entitled to a patent from the United States for land in Oregon, could, before receiving such patent, sell and convey the land, so as to cut off the rights of his or of her children or heirs, in case of his or her death before the patent was actually issued. *Barney* v. *Dolph*, 652.

DURESS. See *Payment.*

EJECTMENT. See *Foreclosure*, 2.

EQUITABLE ASSIGNMENT. See *Claims against the United States.*

EQUITY. See *Court of Equity; Infringement*, 1; *Mortgage*, 1.

EQUITY OF REDEMPTION. See *Foreclosure*, 2; *Mortgage*, 2–4.

The statute of Minnesota declares that, in the foreclosure of a mortgage by a proceeding in court, the debtor, after the confirmation of the sale, shall be allowed twelve months in which to redeem, by paying the amount bid at the sale, with interest. Where, in a foreclosure suit, a decree, passed by a court of the United States sitting in that State, ordered the master, on making the sale, to deliver to the purchaser a certificate that, unless the mortgaged premises were, within twelve months after the sale, redeemed, by payment of the sum bid, with interest, he would be entitled to a deed, and should be let into possession upon producing the master's deed and a certified copy of the order of the court confirming the report of the sale, — *Held*, that the decree gave substantial effect to the equity of redemption secured by the statute. *Allis* v. *Insurance Company*, 144.

EQUIVALENT. See *Letters-patent*, 5.

ESTOPPEL. See *Contracts*, 4; *Corporation*, 2; *Practice*, 7; *Tax, Enforcement of the Payment thereof.*

1. Where stockholders sanctioned a contract, under which moneys were loaned to a corporation by its directors, and its bonds therefor,

ESTOPPEL (*continued*).

secured by mortgage, given, and the moneys have been properly applied, the corporation is estopped from setting up that the bonds and mortgage are void by reason of the trust relations which the directors sustained to it. *Hotel Company* v. *Wade*, 13.

2. A party is estopped from denying the corporate existence of a company when, by holding its bonds, he acquires a *locus standi* in the suit brought to foreclose the mortgage made to secure their payment. *Wallace* v. *Loomis*, 146.

3. A., the owner of a parcel of land, consisting of four adjoining lots, three of them having buildings thereon, conveyed it in fee to B. in trust, to secure the payment of certain notes to C. He subsequently used the land and buildings as a paper manufactory, annexing thereto the requisite machinery, and secured by lease a supply of water as a motive-power. Default having been made in paying the notes, B., under the power conferred by the deed, sold the land, excluding therefrom the machinery and water-power therewith connected; and on the ground that they constituted an entirety, and should have been sold together, A., by his bill against C., obtained a decree setting aside said sale. The notes remaining unpaid, C. filed his bill against A. and the lessor of the water-power, to enforce the execution of the trust, and prayed that the land mentioned in said deed, including the fixtures, machinery, and water-power, be sold as an entirety. The court below passed a decree accordingly. A. appealed here. *Held*, 1. That the decree is correct. 2. That the former decree estopped the parties thereto from again litigating the questions thereby decided. *Hill* v. *National Bank*, 450.

EVIDENCE. See *Clearance*, 2, 3; *French and Spanish Land-Grants*, 5; *Internal Revenue*, 2–5; *Jurisdiction*, 13; *Mortgage*, 4; *Practice*, 3, 6, 7; *Probable Cause, Certificate of*.

1. The doings of a county court of Missouri can be shown only by its record. *County of Macon* v. *Shores*, 272.

2. A claim under a Mexican grant was, in 1862, confirmed by this court to A. to the extent of five hundred acres of land. The title thereto was afterwards transferred to B., who brought ejectment therefor against A. The latter offered in evidence a duly certified copy of a decree of the District Court, rendered in pursuance of a mandate of this court of the 13th of June, 1866, confirming the title of the city of San José, as a successor of the Mexican pueblo of that name, to certain lands or commons belonging to the pueblo, the out-boundaries of which included the demanded premises; but the decree excepted from the confirmation all parcels vested in private proprietorship, under grants from lawful authority, which the tribunals of the United States had finally confirmed to parties claiming under such grants. *Held*, that the offered evidence was properly excluded *Chaboya* v. *Umbarger*, 280.

EVIDENCE (*continued*).

3. Where the conditions of a bond which are not sustainable are severable from those which are, the latter hold good *pro tanto*, and evidence to show a breach of them are admissible. *United States* v. *Mora*, 413.

4. It is not necessary to the admissibility of a deposition, offered to prove the evidence given at a previous trial by a witness who is now dead, that the deponent shall be able to give the exact language of such witness. The substance is all that the law requires, and the deponent may, in order to refresh his memory, recur to his notes taken at the trial. *Ruck* v. *Rock Island*, 693.

EXCEPTIONS. See *Bill of Exceptions.*

EXECUTION. See *Bailment*, 2.

EXECUTORS. See *Judgment in Personam.*

FAILURE. See *Jurisdiction*, 8.

FEDERAL QUESTION. See *Evidence*, 2.

FORECLOSURE. See *Equity of Redemption*, 1; *Estoppel*, 2; *Jurisdiction*, 6.

1. In Illinois, open, visible, and exclusive possession of lands by a person, under a contract for a conveyance of them to him, is constructive notice of his title to creditors and subsequent purchasers. *Noyes* v. *Hall*, 34.

2. A., the owner in fee of certain lands, having mortgaged them to B., to secure a debt, contracted in writing to sell and convey them to C., who thereupon, pursuant to the contract, entered on them, and thereafter remained in the open and visible possession of them. The assignee of B. subsequently brought suit to foreclose the mortgage, but failed to make C. a party. A decree by default was rendered, under which the lands were sold to D., who conveyed them to B., after C. had paid to A. all that was due upon the contract and received from him a deed, which was in due time recorded. B. brought ejectment, and C. filed his bill to redeem. *Held*, that C., not having been served with process, was not bound by the foreclosure proceedings, and that the title which passed by the sale under them was subject to his right of redemption. *Id.*

FOREIGN PATENT OR PUBLICATION. See *Letters-patent*, 7.

FORFEITURE. See *Condition Subsequent; French and Spanish Land-Grants*, 1.

FORMER CONVICTION, PLEA OF. See *Criminal Law*, 5.

FRAUD. See *Contracts*, 4; *Internal Revenue*, 1–5; *Judgment in Personam*, *Payment.*

FRAUDS, STATUTE OF. See *Assignee in Bankruptcy*, 2; *Mortgage*, 4.

FRAUDULENT CONVEYANCE. See *Judgment in Personam.*

FRAUDULENT PREFERENCE. See *Bankruptcy*, 1.

FRENCH AND SPANISH LAND-GRANTS.

1. On Dec. 17, 1798, A. applied to the Spanish governor-general for a grant of six hundred and ten arpents of land, for a plantation and settlement, in the district of Baton Rouge, three miles from the Mississippi. To the application was annexed a certificate of the local surveyor that in the district of St. Helena, on the west bank of the Tangipahoa River, beginning at the thirty-first parallel of latitude, the boundary line of the United States, and about fifty miles east of the Mississippi, there were vacant lands in which could be found the arpents front which the petitioner asked for, excluding whatever might be in the possession of actual settlers. To this application the surveyor of the district added a further certificate, dated Dec. 22, 1798, and addressed to the governor, by which he stated that four hundred and ten arpents might be conceded in the place indicated by the local surveyor. Thereupon De Lemos, then governor, issued a warrant or order of survey, as follows: —

"NEW ORLEANS, Jan. 2, 1799.

"The surveyor of this province, Don Carlos Trudeau, shall locate this interested party on four hundred and ten arpents of land, front, in the place indicated in the foregoing certificate, they being vacant, and thereby not causing injury to any one, with the express condition to make the high-road and do the usual clearing of timber in the absolutely fixed limit in one year; and that this concession is to remain null and void if at the expiration of the precise space of three years the land shall not be found settled upon, and to not be able to alienate it within the same three years, under which supposition there shall be carried out uninterruptedly the proceedings of the survey, which he (the surveyor) shall transmit to me, so as to provide the interested party with the corresponding title-papers in due form."

Neither survey, settlement, nor improvement of any kind was ever made by A., or by any one claiming under him. On Feb. 26, 1806, after the cession of Louisiana to the United States, but before this part of it was surrendered by Spain, he procured from the local Spanish surveyor at Baton Rouge an authority to a deputy surveyor, to survey the tract according to certain general instructions which do not appear, specifying, however, that it was understood that the warrant was for a certain number of arpents in front, and that the depth ought to be forty arpents, or four hundred perches of Paris. Nothing was ever done by the deputy surveyor, and the prosecution of the grant was abandoned by A. and his assigns until long afterwards. Grandpré having, in 1806, become governor, issued a warrant for a thousand arpents, on a portion of the tract, to one Yarr, whose title was subsequently confirmed by the United States. Before the country was occupied by the United States, actual settlers had become possessed of the whole tract, and they were, upon the

FRENCH AND SPANISH LAND-GRANTS (*continued*).

report of the commission appointed to investigate the titles to land in that region, subsequently confirmed in their holdings by the act of March 3, 1819. A., Sept. 16, 1814, assigned his right to the land to B., who, Dec. 26, 1824, presented his claim to the lands to the commissioners, under the act passed May 26, 1824 (4 Stat. 59), by whom it was rejected. B. having died, C., claiming as his devisee, brought this suit under the act of June 22, 1860, entitled "An Act for the final adjustment of land-claims in the States of Florida, Louisiana, and Missouri, and for other purposes" (12 id. 85), but showed no derivation of title to himself. *Held*, 1. That the lands, by reason of the non-performance within the specified time of the conditions mentioned in the warrant of survey, were forfeited and became subject to the disposing power of the United States. 2. That, if the legal representatives of B. had a valid claim, C., being a stranger thereto, and showing no interest therein, would not be entitled to a decree confirming it in their favor. *McMicken* v. *United States*, 204.

2. The said act of June 22, 1860 (*supra*), although it contains sundry remedial provisions, and removes the objection arising from the want of title in the government which was in possession of the territory at the time of making the grants, if they were otherwise sustainable on the principles of justice and equity, does not aid claims which from intrinsic defects were invalid in 1815 or 1825. *Id.*

3. The laws and the proceedings thereunder, touching French and Spanish grants, mentioned, and the decisions as to the effect thereon of a breach of the conditions annexed thereto cited and examined. *Id.*

4. Where a grant of lands, made pursuant to a sale of them, and describing them by metes and bounds, according to a previous regular survey, was made by the Spanish Intendant, March 5, 1804, when, according to the views of the government of the United States, the title to Spain had terminated, but while she was in actual possession, and claimed the sovereignty of that part of Louisiana where the lands are situate, — *Held*, that the grant is subject to confirmation, under the act of June 22, 1860, entitled "An Act for the final adjustment of private land-claims in the States of Florida, Louisiana, and Missouri, and for other purposes." 12 Stat. 85. *United States* v. *Watkins*, 219.

5. Where the original documents to support a claim under said act are not produced, and there is no just ground to suspect their genuineness, the record of them, made by the proper commissioner, to whom the claim was originally presented, is sufficient *prima facie* evidence of their contents. *Id.*

6. A. and B., assignees of the party to whom the grant was made in 1804, filed, under said act, a petition in the District Court praying

FRENCH AND SPANISH LAND-GRANTS (*continued*).

for the confirmation of their claim covering lands, portions of which had been donated by the United States to settlers. Due proof was made of the grant and assignment; but it appeared that B. had conveyed his interest thereunder to C. A decree was passed dismissing the petition as to B., confirming the right of A. to one undivided half of so much of said lands whereto the title remained in the United States, and awarding him certificates of location equal in extent to one undivided half of the residue of said lands. *Held*, 1. That the decree was proper. 2. That "sold," where it occurs in the sixth section of said act, is of equivalent import with "sold or otherwise disposed of." *Id.*

GRANTS. See *French and Spanish Land-Grants; Land-Grant Railroads; Mexican Land-Grants; Swamp and Overflowed Lands.*

GUARDIAN AND WARD. See *Corporation*, 2.

HEARING, CAUSES TO BE READY FOR, WHEN REACHED. See *Practice*, 5.

HEIR. See *Assignee in Bankruptcy*, 2; *Donation Act.*

HUSBAND AND WIFE. See *Donation Act; Judgment in Personam.*

ILLINOIS. See *Pleading*, 1.

In Illinois, open, visible, and exclusive possession of lands by a person, under a contract for a conveyance of them to him, is constructive notice of his title to creditors and subsequent purchasers. *Noyes* v. *Hall*, 34.

IMPLICATION, REPEAL BY. See *Repeal.*

IMPLIED CONTRACT. See *Contracts*, 2.

IMPORTS, DUTIES ON. See *Constitutional Law*, 13; *Smuggling.*

1. Certain chromo-lithographs, printed from oil-stones upon paper, and known as decalcomanie pictures, were imported. *Held*, that they were, as printed papers, subject, under sect. 2504 of the Revised Statutes, to a duty of twenty-five per cent *ad valorem*. *Arthur* v. *Moller*, 365.

2. On the arrival of the steamship "Hansa" at her pier or dock at Hoboken, N. J., certain packages were, without a permit or the knowledge of the customs inspectors, unladen by her officers as the baggage of steerage passengers. The customs officers having there examined the packages, and found them to contain articles subject to duty, so marked them for identification, and sent them to Castle Garden, New York City, for further examination. Upon such further examination at that place, and the failure to pay the duties, the packages were sent to the seizure-room at the custom-house. *Held*, that the seizure was made at Castle Garden, and not on the pier or dock at Hoboken. *Four Packages* v. *United States*, 404.

3. It being fully proved that the packages were so unladen, the court

IMPORTS, DUTIES ON (*continued*).
below did not err in directing a verdict condemning them for a violation of the fiftieth section of the act of March 2, 1799 (1 Stat. 665). *Id.*

INDICTMENT. See *Criminal Law*, 5; *States, Police Powers of*, 2.

INFERENCE. See *Death, Presumption of*, 2; *Internal Revenue*, 1–5; *Jurisdiction*, 13.

INFRINGEMENT. See *Letters-patent*, 5, 6, 11–14, 16.

1. Where contractors laid a pavement for a city, which infringed the patent of Nicholson, and the city paid them as much therefor as it would have had to pay him had he done the work, thus realizing no profits from the infringement, — *Held*, that in a suit in equity, to recover profits, against the city and the contractors, the latter alone are responsible, although the former might have been enjoined before the completion of the work, and perhaps would have been liable in an action for damages. *Elizabeth* v. *Pavement Company*, 126.
2. Where profits are made by an infringer by the use of an article patented as an entirety or product, he is responsible to the patentee for them, unless he can show — and the burden is on him to show it — that a portion of them is the result of some other thing used by him. *Id.*
3. No stipulations between a patentee and his assignee, as to royalty to be charged, can prevent the latter from recovering from an infringer the whole profits realized by reason of the infringement. *Id.*

INJUNCTION. See *Infringement*, 1.

INNOCENT PURCHASER. See *Mortgage*, 8.

INSOLVENCY. See *Bankruptcy*, 1.

INSURER. See *Contracts*, 1.

INTENT. See *Internal Revenue*, 1–5.

INTERCOURSE AND TRADE.

1. The proclamation of the President of June 13, 1865 (13 Stat. 763), annulling in the territory of the United States east of the Mississippi, all restrictions previously imposed upon internal, domestic, and coastwise intercourse and trade, and upon the removal of products of States theretofore declared in insurrection, took effect as of the beginning of that day. *United States* v. *Norton*, 164.
2. There was, therefore, on that day, no authority, under the act of July 2, 1864 (13 Stat. 375), and the treasury regulations of May 9, 1865, for retaining from the owner of cotton shipped to New Orleans from Vicksburg, Miss., one-fourth thereof, nor for exacting from him a payment equal in value to such one-fourth. *Id.*
3. *United States* v. *Lapeyre* (17 Wall. 191) reaffirmed. *Id.*

INTEREST. See *Usury*, 1.

INTERNAL REVENUE. See *Probable Cause, Certificate of.*

1. The ninth section of the act of July 13, 1866 (14 Stat. 133), imposed upon "smoking-tobacco, sweetened, stemmed, or butted, a tax of forty cents per pound," and "on smoking-tobacco of all kinds not sweetened, nor stemmed, nor butted, including that made of stems, or in part of stems," fifteen cents per pound. *Held*, that a mixture of smoking-tobacco, consisting of leaves from which the stems had been removed, and of stems so manipulated as to be undistinguishable from the leaf, — the proportion of stems and leaves being the same which they originally bore to each other, — was liable to a tax of forty cents per pound, as smoking-tobacco stemmed or butted. *Lilienthal's Tobacco* v. *United States*, 237.
2. Under the act of March 3, 1865 (13 id. 477), a manufacturer returned such smoking-tobacco for taxation at thirty-five cents per pound, and after the passage of the act of July 13, 1866 (*supra*), at forty cents per pound, until Aug. 20, 1866, when he somewhat increased the proportion of stems used, and for seventeen months thereafter returned it for taxation at fifteen cents per pound. *Held*, that his conduct was evidence proper to be considered by the jury, in connection with other circumstances, in determining whether or not he intended to defraud the United States of the tax to accrue upon the manufactured and the unmanufactured tobacco found in his factory at the time of seizure. *Id.*
3. A. used portions of a building as a tobacco manufactory, and the remainder of it as a salesroom, having a counter at which goods were sold at retail. Cigars and tobacco removed from the factory to the salesroom, for sale at retail, were returned by him for taxation as "sold or removed for sale," though he still owned them. *Held*, 1. That this was not such a sale or removal as to entitle the tobacco to be so returned. 2. That A.'s manner of doing business was proper to be considered by the jury in determining whether or not he thereby intended to defraud the United States in respect to other tobacco in his manufactory at the time of seizure. *Id.*
4. Certain tobacco, liable to a tax of twenty-five cents per pound, was, by the act of March 3, 1865 (*supra*), subjected, after the last day of that month, to a tax of thirty-five cents per pound. On March 8, 1865, A made a fictitious sale of a large quantity of such tobacco, in order that he might return it as sold prior to April 1, 1865, and did so return it, paying but twenty-five cents per pound as the tax thereon. *Held*, 1. That he was not authorized thus to return it. 2. That the United States had the right to show the fictitious character of the transaction as tending to prove an intent to defraud, even though some of the tobacco was, when actually sold and removed, liable to pay a tax of but ten cents per pound. *Id.*
5. Evidence having been given of the foregoing acts and of other viola-

INTERNAL REVENUE (*continued*).

tions of the internal-revenue laws by A., consisting of acts and omissions in connection with the sale and removal of tobacco subject to tax, but unconnected with the property under seizure, the court instructed the jury, in substance, that if they found that A. had in fact so violated the internal-revenue laws, the burden of proof was upon him to satisfy them that such violations were not committed by him with intent to defraud the revenue; and that unless he did so, they might draw the inference that such intent existed; and from such inference further conclude that the property seized was also held by him with like intent, as charged in the information. *Held*, that the instruction was not erroneous. *Id.*

6. In the forenoon of March 3, 1875, A. stamped, sold, and removed for consumption or use from the place of manufacture certain tobacco, which, under sect. 3368 of the Revised Statutes, was subject to a tax of twenty cents per pound. On the afternoon of that day, the President approved the act of March 3, 1875 (18 Stat. 339), increasing the tax to twenty-four cents per pound, but providing that such increase should "not apply to tobacco on which the tax under existing laws shall have been paid when this act takes effect." *Held*, that the increase of tax under that act did not apply to the tobacco so stamped, sold, and removed. *Burgess* v. *Salmon*, 381.

7. An action by the United States, to recover the proceeds arising from sales of tobacco, which, found in the hands of the defendant, a bailee, was seized as forfeited for the non-payment of the tax due thereon, and then left with him, under an agreement with the collector of internal revenue that he, the bailee, should sell it and hold the proceeds, subject to the decision of the proper court, is, within the meaning of sect. 699 of the Revised Statutes, an action to enforce a revenue law, and this court has jurisdiction to re-examine the judgment, without regard to the amount involved. *Pettigrew* v. *United States*, 385.

8. The defendant having set up in his plea that, while he held such proceeds, pursuant to the agreement, a suit to recover them, defended by A., the owner of the tobacco, was dismissed by the United States after plea filed, and that the defendant, after retaining them for nearly four years, and no other suit having been brought, paid them to A., the court, although testimony was offered sustaining his plea, instructed the jury that he was liable. *Held*, that the instruction was erroneous. *Id.*

9. If a distiller uses material for distillation in excess of the estimated capacity of his distillery, according to the survey made and returned under the provisions of the law regulating that subject, but, in the regular course of his business, pays the taxes upon his entire production, he cannot be again assessed at the rate of seventy cents on every gallon of spirits which the excess of material used should have produced, according to the rules of estimation prescribed by the internal-revenue law. *Stoll* v. *Pepper*, 438.

INTOXICATING LIQUORS. See *Constitutional Law*, 5.

INVENTION. See *Letters-patent.*

INVOLUNTARY BANKRUPTCY. See *Bankruptcy*, 2.

IOWA. See *Swamp and Overflowed Lands*, 1.

JOINT AND SEVERAL LIABILITY. See *Jurisdiction*, 8.

JUDGMENT. See *Jurisdiction*, 1, 3, 13.

JUDGMENT, COLLATERAL EFFECT OF. See *Jurisdiction*, 2.

JUDGMENT IN PERSONAM.

The court adheres to its ruling in *Phipps* v. *Sedgwick* (95 U. S. 3), that, where a husband causes real estate to be conveyed to his wife in fraud of his creditors, a judgment *in personam* for its value cannot be taken at the suit of his assignee in bankruptcy, against her, nor, in case of her death, against her executors. *Trust Company* v. *Sedgwick*, 304.

JURISDICTION. See *Criminal Law; New Trial; Practice*, 11.

I. Of the Supreme Court.

1. The amount of the judgment below against a defendant in an action for money is *prima facie* the measure of the jurisdiction of this court in his behalf. *Troy* v. *Evans*, 1.
2. This *prima facie* case continues until the contrary is shown; and, if jurisdiction is invoked because of the collateral effect a judgment may have in another action, it must appear that the judgment conclusively settles the rights of the parties in a matter actually in dispute, the sum or value of which exceeds $5,000, exclusive of interest and costs. *Id.*
3. It appearing from the record that the point that the prohibitory liquor law of Massachusetts of 1869 impaired the obligation of the contract contained in the charter of the Boston Beer Company was made on the trial of this case and decided adversely to the company, and was afterwards carried by bill of exceptions to the Supreme Court of Massachusetts, where the rulings of the lower court were affirmed, this court has jurisdiction. *Beer Company* v. *Massachusetts*, 25.
4. This court has jurisdiction to re-examine the judgment of the Circuit Court in an action to enforce a revenue law, without regard to the amount involved. *Pettigrew* v. *United States*, 385.
5. Where a case has been decided in an inferior court of a State on a single point which would give this court jurisdiction, it will not be presumed here that the Supreme Court of the State decided it on some other ground not found in the record or suggested in the latter court. *Keith* v. *Clark*, 454.
6. The court reaffirms the doctrine in *Williams* v. *Bruffy* (96 U. S. 176), that an enactment of the Confederate States, enforced as a law of one

JURISDICTION (*continued*).

of the States composing that confederation, is a statute of such State, within the meaning of the act regulating the appellate jurisdiction of this court over the judgments and decrees of the State courts. *Ford* v. *Surget*, 594.

II. OF THE CIRCUIT COURTS.

7. Bonds issued by a corporation in Nebraska, secured by a mortgage on its lands there situate, were held by citizens of another State, who, on default of the corporation to pay the interest represented by the coupons, applied to the trustee named to take possession of the lands, pursuant to the mortgage, and bring a foreclosure suit. On his refusal, they filed their bill Sept. 24, 1873, in the Circuit Court, against him, the corporation, and the other bond and coupon holders, all citizens of Nebraska, who refused to join in bringing suit. *Held*, that the complainants had the right to file their bill, and that the court below had jurisdiction, although some of the respondents were joined as such solely on the ground that they had refused to unite with the complainants in the prosecution of a suit to compel the trustee to foreclose the mortgage. *Hotel Company* v. *Wade*, 13.

8. The act of Congress approved March 2, 1809 (2 Stat. 534), provides that, in case of the disability of a judge of the District Court of the United States to perform the duties of his office, such duties shall be performed by the justice of the Supreme Court allotted to the circuit which embraces the district. By the second section of the act approved April 10, 1869 (16 id. 44), the same power is conferred upon the circuit judge. *Wallace* v. *Loomis*, 146.

9. The Merchants' Bank of South Carolina, at Cheraw, suspended specie payments Nov. 13, 1860, and never thereafter resumed. Its charter contains a provision that, "in case of the failure of the said bank, each stockholder, copartnership, or body politic, having a share or shares in the said bank at the time of such failure, or who shall have been interested therein at any time within twelve months previous to such failure, shall be liable and held bound individually for any sum not exceeding twice the amount of his, her, or their share or shares." To enforce this provision, A., Dec. 2, 1870, filed, for himself and other note-holders, a bill in the Circuit Court, against the receiver of the bank, its cashier, five of its directors, and some sixty others, as stockholders, alleging, among other matters, that he was a citizen of Virginia, but making no averment touching the citizenship of the other note-holders or of the defendants. Such citizenship does not appear by the record, and the bank was not made a party. Twenty of the defendants were served with process, and the others did not enter an appearance. Dec. 15, 1874, a final decree was rendered, which, after declaring that the persons who held shares of stock in said bank "on the first day of the month of

JURISDICTION (*continued*).

March, A.D. 1865, or who were interested therein within twelve months previous to said first day of March, 1865, are liable and are held bound individually to the complainants, for a sum not exceeding twice the amount of the share or shares held by said stockholders respectively," and reciting the names of over sixty of such stockholders, the number of shares held by each, and the amount for which each was liable, together with the names of five bill-holders, in addition to A., and the amount due to each of them, awards judgment and execution against the defendants, stockholders, as aforesaid, for the amount due said bill-holders respectively, besides costs. *Held*, 1. That the citizenship of the parties is not sufficiently shown to give the court below jurisdiction; and, were it otherwise, the decree is erroneous, in that it was taken against parties not served, and against the defendants jointly, while a several liability was imposed by the charter upon each stockholder, not to exceed twice the amount of his shares. 2. That, within the meaning of its charter, the bank failed Nov. 13, 1860. 3. That a suit against a person who was a stockholder at that date, or within twelve months prior thereto, was, when this suit was commenced, barred by the Statute of Limitations. *Godfrey* v. *Terry*, 171.

10. Where the jurisdiction of a court of the United States depends upon the citizenship of the parties, such citizenship, and not simply their residence, must be shown by the record. *Robertson* v. *Cease*, 646.

11. The ruling in *Railway Company* v. *Ramsey* (22 Wall. 322), approved in *Briges* v. *Sperry* (95 U. S. 401), that the fact of such citizenship need not necessarily be averred in the pleadings, if it otherwise affirmatively appears by the record, does not apply to papers copied into the transcript, but not made a part of the record by bill of exceptions, or by an order of the court referring to them, or by some other mode recognized by the law. *Id.*

12. The presumption that a case is without the jurisdiction of the Circuit Court remains now as it was before the adoption of the Fourteenth Amendment to the Constitution of the United States. *Id.*

13. The defendant having made no objection in the court below to its jurisdiction, by reason of the non-averment of the citizenship of the plaintiff, this court, in reversing the judgment, grants leave to the latter to amend his declaration in respect to his citizenship at the commencement of the suit, if it be such as to authorize that court to proceed with the trial. *Id.*

III. In General.

14. In ejectment for lands in Oregon, the defendant claimed title under a sheriff's deed, pursuant to a sale of them under execution sued out upon a judgment by default rendered in 1861 against A. in the

JURISDICTION (*continued*).

State court. A certified transcript of the judgment record, consisting, as required by the statute, of a copy of the complaint and notice, with proof of service, and a copy of the judgment, was put in evidence. The statute also required that in actions *in personam* service should be made by the sheriff's delivering to the defendant personally, or, if he could not be found, to some white person of his family above the age of fourteen years, at his dwelling-house or usual place of abode, a copy of the complaint and notice to answer. The suit against A. was for the recovery of money, and the sheriff's return showed that service was made "by delivering to the wife of A., a white woman over fourteen years of age, at the usual place of abode," a copy of the complaint and notice; but it contained no statement that A. could not be found. At the ensuing term, judgment was rendered against him, with a recital that the "defendant, although duly served with process, came not, but made default." *Held*, 1. That the court, by such service, acquired no jurisdiction over the person of A., and its judgment was void. 2. That such substituted service, if ever sufficient for the purposes of jurisdiction, can only be made where the condition upon which it is permissible is shown to exist. 3. That the inability of the sheriff to find A. was not to be inferred, but to be affirmatively stated in his return. 4. That the said recital is not evidence of due service, but must be read in connection with that part of the record which sets forth, as prescribed by statute, the proof of service. 5. That such proof must prevail over the recital, as the latter, in the absence of an averment to the contrary, the record being complete, can only be considered as referring to the former. *Settlemier* v. *Sullivan*, 444.

KANSAS, LANDS IN. See *Payment*.

LACHES.

The United States, in asserting its rights, is not barred by the laches of its officers or agents. *Gaussen* v. *United States*, 584.

LAND-GRANT RAILROADS.

1. Subject to certain reservations and exceptions, the act of Congress of July 1, 1862 (12 Stat. 489), "to aid in the construction of a railroad and telegraph line from the Missouri River to the Pacific Ocean, and to secure to the government the use of the same for postal, military, and other purposes," passed to the companies therein named a present interest in every odd-numbered section of public land, within specified limits, on each side of the lines of their respective roads. When those lines were definitely established, the title of the companies acquired precision, and became attached to such sections. *Missouri, Kansas, and Texas Railway Co.* v. *Kansas Pacific Railway Co.*, 491.
2. Said act having been amended by that of July 2, 1864 (13 Stat. 356)

LAND-GRANT RAILROADS (*continued*).

by substituting words of larger import, the grant must be treated as if it had been thus made originally; and therefore, as against the United States, the title of the companies to the increased quantity of land must be considered as taking effect July 1, 1862. *Id.*

3. The company now known as the Kansas Pacific Railway Company was one of the companies mentioned in said acts. By the act of July 3, 1866 (14 Stat. 79), it was authorized to designate the general route of its road, and to file a map thereof at any time before Dec. 1, 1866: *Provided*, that, after the filing of the map, the lands along its entire line, so far as designated, should be reserved from sale by the Secretary of the Interior. Within the specified time, the company filed a map designating as such general route a line from Fort Riley to the western boundary of Kansas, by way of the Smoky Hill River. The lands upon this route, embracing, among others, those now in controversy, were accordingly withdrawn from sale; and, in January, 1867, the road was completed for twenty-five miles, approved by the commissioners appointed to examine it, and accepted by the President. *Held*, 1. That the title of the company attaching to those lands by the location of the road, followed by the construction thereof, took effect, by relation, as of the date of the said act of 1862, so as to cut off all intervening claimants, except in the cases where reservations were specially made in it and the amendatory act of 1864. 2. That such reservations operated as limitations upon the grant. *Id.*

4. It was not within the language or intention of those acts to except from their operation any portion of the odd-numbered sections within the limits specified in either act, for the purpose of thereafter granting them to aid in the construction of other roads. *Id.*

5. The claim of the Missouri, Kansas, and Texas Railway Company to the lands in controversy arises under the act of July 26, 1866 (14 Stat. 289), under which the route of its road was designated, a map thereof filed, and the road constructed. At that date, the title to the lands along that route, which were covered by the previous grant to the Kansas Pacific Railway Company, had already passed from the United States. *Id.*

6. Although the rights of said companies are determined by the date of their respective grants, it appears that the location of the Kansas Pacific was earlier than that of the Missouri, Kansas, and Texas road. *Id.*

LANDS, POSSESSION OF. See *Illinois*.

LEGAL TITLE. See *Mortgage*, 3.

LETTERS-PATENT. See *Infringement*, 1–3; *States, Police Powers of*.

1. The mere change in form of a soluble article of commerce, by reducing it to small particles so that its solution is accelerated and it is rendered more ready for immediate use, convenient for handling, and, by its improved appearance, more merchantable, does not make it a

LETTERS-PATENT (*continued*).

new article, within the sense of the patent law. *Glue Company* v. *Upton*, 8.

2. To render an article new within that law, it must be more or less efficacious, or possess new properties by a combination with other ingredients. *Id.*
3. Reissued letters-patent No. 4072, granted July 12, 1870, to Thomas P. Milligan and Thomas Higgins, assignees of Emerson Goddard, for an improvement in the manufacture of glue, — the alleged improvement consisting "of glue comminuted to small particles of practically uniform size, as distinguished from the glue in angular flakes hitherto known," — are void for want of novelty. *Id.*
4. Letters-patent No. 37,941, granted March 17, 1863, to William M. Welling, for an improvement in rings for martingales, are void for want of novelty, being merely for a product consisting of a metallic ring enveloped in a composition of ivory or similar material. *Rubber-Coated Harness-Trimming Co.* v. *Welling*, 7.
5. The substantial equivalent of a thing is, in the sense of the patent law, the same as the thing itself. Two devices which perform the same function in substantially the same way, and accomplish substantially the same result, are therefore the same, though they may differ in name or form. *Machine Company* v. *Murphy*, 120.
6. The combination, consisting of a fixed knife with a striker and the other means employed to raise the striker and let it fall to perform the cutting function, embraced by letters-patent No. 146,774, issued Jan. 27, 1874, to Merrick Murphy, for an improvement in paper-bag machines, is substantially the same thing as the ascending and descending cutting device embraced by letters-patent No. 24,734, issued July 12, 1859, to William Goodale. *Id.*
7. A foreign patent or publication describing an invention, unless published anterior to the making of the invention or discovery secured by letters-patent issued by the United States, is no defence to a suit upon them. *Elizabeth* v. *Pavement Company*, 126.
8. The presumption arising from the oath of the applicant that he believes himself to be the first inventor or discoverer of the thing for which he seeks letters-patent remains until the contrary is proved. *Id.*
9. The use of an invention by the inventor, or by persons under his direction, if made in good faith, solely in order to test its qualities, remedy its defects, and bring it to perfection, is not, although others thereby derive a knowledge of it, a public use of it, within the meaning of the patent law, and does not preclude him from obtaining letters-patent therefor. *Id.*
10. Samuel Nicholson having, in 1847, invented a new and useful improvement in wooden pavements, and filed in the Patent Office a *caveat* of his invention, put down in 1854, as an experiment, his wooden pavement on a street in Boston, where it was exposed to

LETTERS-PATENT (*continued*).

public view and travelled over for several years, and it proving successful, he, Aug. 7, 1854, obtained letters-patent therefor. *Held*, 1. That there having been no public use or sale of the invention, he was entitled to such letters-patent. 2. That they were not avoided by English letters-patent for the same invention, enrolled in 1850. *Id.*

11. Reissued letters-patent No. 3727, granted by the United States, Nov. 9, 1869, to Edward H. Ashcroft, assignee of William Naylor, for an improvement in steam safety-valves, being a reissue of original letters No. 58,962, granted to Naylor Oct. 16, 1866, cannot, in view of the disclaimer of said Naylor in his specification, upon which English letters-patent No. 1880 were sealed to him Jan. 19, 1864, and of the prior state of the art, be construed to embrace a combination, in every form of spring safety-valve, of a projecting, overhanging, downward-curved lip or periphery, with an annular recess or chamber surrounding the valve-seat, into which a portion of the steam is deflected as it issues between the valve and its seat, but must be limited to a combination of the other elements of his device, with such an annular recess of the precise form, and operating in the manner described, so far as such recess, separately or in combination, differs in construction or mode of operation from those which preceded it. *Ashcroft* v. *Railroad Company*, 189.

12. Said reissued letters, thus limited, are not infringed by the use of a steam safety-valve made in substantial compliance with the specification of letters-patent No. 58,294, granted Sept. 25, 1866, to George W. Richardson. *Id.*

13. This case involves merely questions of fact; and the court finds that letters-patent No. 106,165, granted Aug. 9, 1870, to William G. Hyndman, for an "improvement in rotary blowers," infringe the first, second, third, and fourth claims of reissued letters-patent No. 3570, granted July 27, 1869, to P. H. Roots and F. M. Roots, for an "improvement in cases for rotary blowers," upon the surrender of original letters No. 80,010, dated Aug. 11, 1868. *Hyndman* v. *Roots*, 224.

14. The court concurs with the court below that reissued letters-patent No. 72, dated May 7, 1861, and No. 1683, dated May 31, 1864, for new and useful improvements in reaping-machines, and reissued letters No. 1682, dated May 31, 1864, for a new and useful improvement in harvesters, all of which were granted to William H. Seymour and others, are valid, and that they have been infringed by the respondents. *Marsh* v. *Seymour*, 348.

15. *Seymour* v. *Osborne* (11 Wall. 516) cited and commented on. *Id.*

16. Compensatory damages for the infringement of letters-patent may be allowed in equity, although the business of the infringer was so improvidently conducted as to yield no substantial profits. *Id.*

17. A party who invents a new machine never used before, and procures letters-patent therefor, acquires a monopoly as against all merely

LETTERS-PATENT (*continued*).

formal variations thereof; but if the advance towards the thing desired is gradual, and proceeds step by step, so that no one can claim the complete thing, each inventor is entitled only to his own specific form of device. *Railway Company* v. *Sayles*, 554.

18. Double brakes, operating upon the two trucks of a railroad car at the same time, by a single force, through the medium of connecting rods, had been publicly used before Thompson and Bachelder invented the Tanner brake. Only the specific improvement which they made could, therefore, be covered by the letters-patent for that brake. The latter were not infringed by the Stevens brake, for which letters-patent No. 8552 were issued Nov. 25, 1851, though it was invented after the Tanner brake, inasmuch as it is another and different specific form of brake. The parties are entitled to the specific improvement they respectively invented, provided the later does not include the earlier. *Id.*

19. Though the double brakes used before the Tanner brake was invented may have been much less perfect than it, and may have been superseded by it and by other improved forms of brake, nevertheless, they were actually used, and to some good purpose. Their construction and use, though with limited success, were sufficient to contravene the pretension of Thompson and Bachelder that they were the pioneers in this department of invention. *Id.*

20. The original application for a patent made by Thompson and Bachelder was filed in the Patent Office in June, 1847. Having been rejected, it remained there unaltered until 1852, when it was considerably amended, and letters-patent No. 9109 were, July 6, 1852, granted thereon to Tanner, as assignee. *Held*, that no material alterations introduced by such amendments could avail as against parties who had introduced other brakes prior thereto. *Id.*

21. The original application for letters-patent (with its accompanying drawings and model), filed by an inventor, should possess great weight in showing what his invention really was, especially where it remains unchanged for a considerable period, and is afterwards amended so as to have a broader scope. Amendments embracing any material variation from the original application — any thing new, not comprised in that — cannot be sustained on the original application, and should not be allowed; otherwise, great injustice might be done to others who may have invented or used the same things in the mean time. *Id.*

22. The law does not permit enlargements of an original specification any more than it does where letters-patent already granted are reissued. It regards with jealousy and disfavor any attempt to enlarge the scope of an application once filed, or of letters-patent once granted, the effect of which would be to enable the patentee to appropriate other inventions made prior to such alteration, or improvements which have gone into public use. *Id.*

LICENSE. See *Constitutional Law*, 14.

LIEN. See *Claims against the United States; Court of Equity; Mortgage*, 3.

LIMITATIONS, STATUTE OF. See *Assignee in Bankruptcy*, 1; *Rebellion, The*, 2.

1. The charter of the Merchants' Bank of South Carolina contains a provision that, "in case of the failure of the said bank, each stockholder, copartnership, or body politic, having a share or shares in the said bank at the time of such failure, or who shall have been interested therein at any time within twelve months previous to such failure, shall be liable and held bound individually for any sum not exceeding twice the amount of his, her, or their share or shares." Within the meaning of its charter the bank failed Nov. 18, 1860, when it suspended specie payments. *Held*, that a suit commenced Dec. 2, 1870, against a stockholder, to enforce said liability, was barred by the Statute of Limitations. *Godfrey* v. *Terry*, 171.
2. This court adopts the construction of the Supreme Court of North Carolina, that the term "beyond the seas," where it occurs in the Statute of Limitations of that State, means "without the United States." *Davie* v. *Briggs*, 628.

LIS PENDENS. See *Municipal Bonds*, 4, 5.

MALT LIQUORS. See *Constitutional Law*, 1–6.

MANDAMUS. See *Tax, Enforcement of the Payment thereof.*

MANDATE. See *Practice*, 8.

MASSACHUSETTS, PROHIBITORY LIQUOR LAW OF. See *Constitutional Law*, 1–6.

MEXICAN LAND-GRANTS. See *Evidence*, 1.

1. Pending a proceeding in a tribunal of the United States, for the confirmation of a claim to lands in California, under a Mexican grant, no portion of them embraced within the boundaries designated in the grant is open to settlement, under the pre-emption laws, although, upon the final survey of the claim when confirmed, there may be a surplus within those boundaries. *Hosmer* v. *Wallace*, 575.
2. Until a segregation of the quantity granted is made by an approved official survey, third parties cannot interfere with the grantee's possession of the lands, and limit it to any particular place within those boundaries. *Id.*
3. Between March 1, 1856, and May 30, 1862, unsurveyed public lands in California were not subject to settlement under the pre-emption laws. Since the latter date, they, as well as surveyed lands, have been so subject. *Id.*
4. The right of pre-emption only inures in favor of a claimant when

MEXICAN LAND-GRANTS (*continued*).
he has performed the conditions of actual settlement, inhabitation, and improvement. As he cannot perform them while the land is occupied by another, his right of pre-emption does not extend to it. *Id.*

5. The object of the seventh section of the act of July 23, 1866 (14 Stat. 218), "to quiet land-titles in California," was to withdraw from the general operation of the pre-emption laws lands continuously possessed and improved by a purchaser under a Mexican grant, which was subsequently rejected, or limited to a less quantity than that embraced in the boundaries designated, and to give to him, to the exclusion of all other claimants, the right to obtain the title. *Id.*

MILITARY COMMANDERS. See *Criminal Law*, 4; *Rebellion, The*, 5.

MILITARY TRIBUNALS, JURISDICTION OF. See *Criminal Law*, 1, 2.

MINNESOTA. See *Equity of Redemption.*

MISSOURI. See *Public Administrator; Record.*

Sect. 14, art. 11, of the Constitution of Missouri of 1865 did not take away from a county the authority, which had been previously conferred by statute, to subscribe for stock in a railroad company. *County of Macon* v. *Shores*, 272.

MISTAKE. See *Contracts*, 4; *Mortgage*, 4; *Payment.*

MONEY, ACTION FOR. See *Jurisdiction*, 1.

MORTGAGE. See *Equity of Redemption; Estoppel*, 1, 2; *Foreclosure*, 2; *Jurisdiction*, 6.

1. A deed of land, with a power of sale, to secure the payment of a debt, whether made to the creditor or a third person, is, in equity, a mortgage, if there is left a right to redeem on payment of such debt. *Shillaber* v. *Robinson*, 68.

2. Sales under such a power have no validity unless made in strict conformity to the prescribed directions. Therefore, a sale made on a notice of six weeks, instead of twelve, as required by the mortgage and the statute of the State where the lands are situate, is absolutely void, and does not divest the right of redemption. *Id.*

3. A person holding the strict legal title, with no other right than a lien for a given sum, who sells the land to innocent purchasers, must account to the owners of the equity of redemption for all he receives beyond that sum. *Id.*

4. A., to secure the payment of money borrowed from B., mortgaged land to the latter, who commenced proceedings in foreclosure, and obtained a decree under which he purchased the land, and received a deed therefor from the proper officer. He subsequently conveyed it to C. Eight years after the death of B., A. filed his bill against

MORTGAGE (*continued*).

C., alleging a parol agreement whereby he was to make no defence to the foreclosure; that the equity of redemption, notwithstanding the sale and the deed made pursuant thereto, should not be thereby barred, but that B., on receiving his debt from the rents and profits of the land, should convey it to A.; that B. desiring to be repaid at an earlier date, C., at A.'s instance, paid the same, and took a deed from B. with a full knowledge of the agreement between the latter and A.; that C. agreed that, when reimbursed out of the rents and profits of the land, he would convey it to A. *Held*, 1. That, in order to make out his alleged agreement with B., the burden was upon A. to produce evidence of such weight and character as would justify a court in reforming a written instrument, which, upon the ground of mistake, did not set forth the intention of the parties thereto. 2. That such evidence not having been produced to show the alleged agreement, and A.'s continuing interest in the land, his parol agreement with C. was void, under the Statute of Frauds. *Howland* v. *Blake*, 624.

MUNICIPAL BONDS. See *Parties; Pleading*, 2; *Practice*, 2, 3.

1. On April 5, 1870, the county court of Bates County, Missouri, having received the requisite petition, ordered that an election be held May 8 in Mount Pleasant township, for the purpose of determining whether a subscription of $90,000 should be made on behalf of the township to the capital stock of the Lexington, Chillicothe, and Gulf Railroad Company, to be paid for in the bonds of the county, upon certain conditions and qualifications set forth in the order. The election resulted in favor of the subscription; whereupon the court, June 14, 1870, made an order that said sum "be, and is hereby, subscribed, . . subject to and in pursuance of all the terms, restrictions, and limitations" of the order of April 5, and that the agent of the court be authorized and directed to make said subscription, on behalf of the township, on the stock-books of said company, and, in making it, to have copied in full the order of the court as the conditions on which it was made, and that he report his acts to the court. The agent, Dec. 19, 1870, reported that the company had no stock-books, for which, and other reasons, he did not make the subscription, concluding his report with the words, "the bonds of said township are therefore not subscribed," which report was formally adopted by the court. Jan. 18, 1871, the county court made another order, reciting that the subscription had been made to said Lexington, Chillicothe, and Gulf Railroad Company; that a consolidation had been made between that and another company, resulting in the Lexington, Lake, and Gulf Railroad Company, and directing that $90,000 of bonds be issued to the latter company in payment and satisfaction of said original subscription. The order concluded by authorizing the agent of the court "to subscribe said

MUNICIPAL BONDS (*continued*).

stock" to said Lexington, Lake, and Gulf Railroad Company. The agent made the subscription on the books of that company, which was accepted by it, and a certificate of stock issued to the county. The bonds recite on their face that they are issued to the Lexington, Lake, and Gulf Railroad Company, in payment of the subscription to the Lexington, Chillicothe, and Gulf Railroad Company, authorized by the vote of the people held May 3, 1870, and that the two companies were consolidated, as required by law. *Held*, 1. That the action of the county court on June 14, 1870, was not final and self-executing, and did not constitute a subscription to the Lexington, Chillicothe, and Gulf Railroad Company. 2. That the issue of the bonds to the Lexington, Lake, and Gulf Railroad Company was not authorized by the election held May 3, 1870. 3. That there can be no recovery on said bonds, as their invalidity is shown by their recitals. *County of Bates* v. *Winters*, 83.

2. The court reaffirms its former decisions that where, after a preliminary proceeding, such as a popular election, a county had lawful authority to issue its bonds, and they were issued, bearing upon their face a certificate by the officer whose primary duty it was to ascertain the fact that such proceeding had taken place, a *bona fide* holder of them for value before maturity has a right to assume that such a certificate is true. *County of Warren* v. *Marcy*, 96.

3. The bonds are not, in the hands of such a holder, rendered invalid by the fact that such proceeding was so defective that a suit to prevent their issue should be, and, on appeal to the Supreme Court of the State, ultimately was, sustained against the county officers, nor by the fact that they were issued after such a suit had been brought, and were by him purchased during its pendency. *Id.*

4. The rule that all persons are bound to take notice of a suit pending with regard to the title to property, and that they, at their peril, buy the same from any of the litigating parties, does not apply to negotiable securities purchased before maturity. *Id.*

5. The considerations which exclude the operation of that rule to such securities apply to them, whether they were created during the suit or before its commencement, and to controversies relating to their origin or to their transfer. *Id.*

6. In an action against a county to recover the amount due on coupons detached from bonds issued by it in payment of its subscription to the capital stock of a railroad company, it is no defence that the company, which was a *de facto* corporation when the subscription was made, had not been organized within the time prescribed by its charter, and that when the bonds were issued a suit to restrain the issue of them was pending, however it may have ultimately resulted, if the holder had no actual notice thereof, and was a purchaser of them for value before they matured. *County of Macon* v. *Shores*, 272.

NEGOTIABLE SECURITIES. See *Municipal Bonds*, 4, 5.

NEW ARTICLE. See *Letters-patent*, 1, 2.

NEW TRIAL.

The fifth section of the act of Congress of June 1, 1872 (17 Stat. 197), was not intended to abrogate the established law of the courts of the United States, that to grant or refuse a new trial rests in the sound discretion of the court to which the motion is addressed, and that the result cannot be made the subject of review by writ of error. *Newcomb* v. *Wood*, 581.

NON-APPEARANCE OF APPELLANT. See *Practice*, 4.

NORTH CAROLINA, STATUTE OF LIMITATIONS OF. See *Limitations, Statute of*, 2.

NOTICE, CONSTRUCTIVE. See *Foreclosure*, 1.

NOVELTY. See *Letters-patent*, 3, 4.

NUISANCE. See *Constitutional Law*, 14.

OATH. See *Letters-patent*, 8; *Referees*, 3.

OFFICER OF THE ARMY.

Charges of drunkenness on duty having been preferred against A., a captain in the army, he proposed that if they should not be acted upon he would place his resignation in the hands of his commanding officer, to be held, and not forwarded to the War Department, if he should entirely abstain from the use of intoxicating liquors. Accordingly, May 10, 1868, he enclosed in a letter to that officer his resignation, stating that it was without date, and authorizing him, subject to the condition above stated, to place it in the hands of the department commander, to be forwarded to the War Department if he, A., should become intoxicated again. On A.'s again becoming intoxicated on duty prior to Oct. 8, 1868, the department commander, on being notified of the fact, inserted the date of the 5th of that month in the resignation, and duly forwarded it. On the 29th, it was accepted by the President, and the notification of his action thereon was received by A. Nov. 11. The President revoked his acceptance, Dec. 11; but no order promulgating the revocation, or restoring A. to duty, was issued by the War Department. Dec. 22, 1869, the Senate advised and consented to the appointment of B. to be a captain, *vice* A. resigned. *Held*, 1. That A., by voluntarily placing his resignation, without date, in the hands of his commanding officer, authorized him, upon his (A.) becoming again intoxicated, to insert a proper date in such resignation, and forward it for acceptance. 2. That A.'s office became vacant upon his receipt of the notification of the acceptance by the President of the resignation. 3. That the action of the President, revoking such acceptance, did not restore A. to the service. *Mimmack* v. *United States*, 426.

OFFICIAL BOND. See *Bond*, 2.

OHIO. See *Corporation*, 2.

Any issues in an action, whether they be of fact or of law, may, by sect. 281 of the Code of Ohio, be referred to referees. *Newcomb* v. *Wood*, 581.

OREGON. See *Donation Act; Jurisdiction*, 14.

PARDON AND AMNESTY. See *Rebellion, The*, 3, 4.

PAROL AGREEMENT. See *Mortgage*, 4.

PAROL EVIDENCE. See *Mortgage*, 4.

PARTIES. See *Jurisdiction*, 7, 9, 10; *Practice*, 10.

In an action on certain coupons originally attached to bonds issued by the county of Pickens, South Carolina, the holder of them made as sole defendants to his complaint certain persons whom he named "as county commissioners" of said county. No objection was taken to the pleadings, nor any misnomer suggested. Verdict and judgment for the plaintiff. *Held*, 1. That neither the Constitution nor the statutes of that State declare the name by which a county shall be sued. 2. That, if the action should have been brought against the county by its corporate name, the misdescription, if objected to, was, by the statutes of that State, amendable at the trial; but it furnishes no ground for reversing the judgment. *Commissioners* v. *Bank of Commerce*, 874.

PAYMENT. *See Claims against the United States.*

A contract for the purchase by A. from B. of certain lands in Kansas provided that A. should pay all taxes lawfully assessed on them, and that B. would convey them upon the payment of the purchase-money. The taxes assessed for the year 1870, held by the Supreme Court of the State to be valid, not having been paid, the county treasurer advertised, and, in May, 1871, sold the lands therefor, the county bidding them in. In 1872, C., trustee and representative of A., relying upon the validity of the tax, paid without protest into the county treasury, out of moneys belonging to A., a sum sufficient to redeem the lands so sold, and received the tax certificate therefor, which he took in his own name. He also paid a portion of the taxes for 1871 and 1872. The statute provides that, on the non-redemption of lands within three years from the day of the sale thereof for taxes, the treasurer may, on the presentation of the certificate, execute a deed to the purchaser, or refund the amount paid therefor, if he discovers that, by reason of error or irregularity, the lands ought not to be conveyed. This court having decided that the lands were not taxable, C., in 1874, offered to return the tax-certificate to the county treasurer, and demanded that the moneys paid by him be refunded. That demand having been refused, he brought this action to recover them. *Held*, 1. That C. cannot be

PAYMENT (*continued*).
regarded as a purchaser of the lands. 2. That the payments by him so made, there having been neither fraud, mistake of fact, nor duress, were voluntary, in such a sense as to defeat the action. 3. That the statute of Kansas, as construed by the Supreme Court of that State, does not, upon the facts of the case, entitle him to recover. *Lamborn* v. *County Commissioners*, 181.

PENNSYLVANIA. See *Constitutional Law*, 13.

PERILS OF THE SEA. See *Contracts*, 2.

PLEADING. See *Criminal Law*, 5; *Practice*, 7; *Rebellion, The*, 5.
1. In Illinois, a copy of the written instrument on which the action is founded must be filed with the declaration, and it constitutes part of the pleadings in the case. *Nauvoo* v. *Ritter*, 389.
2. Where bonds issued by a municipal corporation, having lawful authority to issue them upon the performance of certain conditions precedent, refer upon their face to such authority, and there is printed on their back a copy of an ordinance declaring such performance, it is not error, in an action against the corporation by an innocent holder of them, to sustain a demurrer to a special plea tendering an issue as to the authority of the corporation to issue them, or as to matters of fact contained in the recital of such ordinance. *Id.*

POLICE POWERS. See *States, Police Powers of.*

POWER OF SALE. See *Mortgage*, 1, 2.

PRACTICE. See *Bill of Exceptions; Equity of Redemption; Jurisdiction*, 13; *New Trial; Parties; Pleading*, 1; *Probable Cause, Certificate of.*
1. Where it can see that no harm resulted to the appellant, this court will not reverse a decree on account of an immaterial departure from the technical rules of proceeding. *Allis* v. *Insurance Company*, 144.
2. Where, in an action against a county, to recover the amount due on coupons detached from bonds issued by it in payment of its subscription to the capital stock of a railroad company, the declaration avers that the plaintiff is a *bona fide* holder of them for value before maturity, and such averment is traversed, it is competent for him, notwithstanding the presumption of law in his favor, to maintain the issue by direct affirmative proof. *County of Macon* v. *Shores*, 272.
3. Where the holder of the coupons, by producing them on the trial, and by other proofs, shows a clear right to recover, and the matters put in evidence by the county do not tend to defeat that right, it is not error to instruct the jury to find for him. *Id.*
4. When a cause, reached in its regular order upon the docket, has, under Rule 16, been dismissed by reason of the appellant's non-appearance, for which no just cause existed, it will not, over the objection of the appellee, be reinstated. *Hurley* v. *Jones*, 318.

PRACTICE (*continued*).

5. In view of the crowded state of the docket, the court announces its determination to enforce rigidly the rule requiring causes to be ready for hearing when they are reached. *Id.*
6. Where the burden of proof is on the plaintiff, and the evidence submitted to sustain the issue is such that a verdict in his favor would be set aside, the court is not bound to submit the case to the jury, but may direct them to find a verdict for the defendant. *Herbert* v. *Butler*, 319.
7. Assumpsit against an insurance company upon a life policy. Plea, *non assumpsit*, with an agreement that either party might introduce any matter in evidence which would be legally admissible if it had been specially pleaded. Leave was subsequently granted the defendant to file a plea of *puis darrein continuance*. There was also an agreement which provided for the admission of the record of a suit in equity then pending in the Supreme Court of New York, whereto the parties hereto, and others claiming the benefit of the policy, were parties, and stipulated that any further proceedings therein might be filed as a part of the agreement at any time before the trial of this action. A decree was rendered by said court November 26, that the company pay the full amount of the policy to the credit of the suit, for the benefit of such of the other parties as should be found to be thereunto entitled, and that upon such payment the company be released and discharged from further liability on said policy, and that the several claimants be enjoined from suing thereon. The amount was thereupon forthwith paid into court. On the 25th of November the plaintiff stated his case, whereupon the hearing was postponed until the 29th of that month, when the defendant, no evidence having as yet been submitted, filed with the clerk of the court a duly certified transcript of said decree. On the trial, leave was refused the defendant to set up the matter of that suit and decree by way of plea, or put it in evidence, under the agreement. *Held*, that the decree was a final determination of the claim of the plaintiff below, and should have been admitted as matter of evidence, having the same force and effect in a court of the United States as in the courts of New York. *Insurance Company* v. *Harris*, 881.
8. An appeal from the decree which the Circuit Court passed in exact accordance with the mandate of this court upon a previous appeal will, upon the motion of the appellee, be dismissed with costs. *Stewart* v. *Salamon*, 861.
9. The court reaffirms the ruling in *Laber* v. *Cooper* (7 Wall. 565), that, where a case has been tried and a verdict rendered as if the pleadings had been perfect, the failure to demur or to reply to a special plea setting up a matter of defence furnishes no ground for reversing the judgment. *Nauvoo* v. *Ritter*, 389.
10. A., a citizen of Tennessee, filed his bill in the Circuit Court of the

PRACTICE (*continued*).

United States, sitting in that State, against B., a citizen of Ohio. A corporation created by the laws of Tennessee was an indispensable party to any relief to A. which a court of equity could give. The court, on a final hearing upon the pleadings and proofs, dismissed the bill. *Held*, that the dismissal should have been without prejudice. *Kendig* v. *Dean*, 423.

11. A writ of error sued out upon a judgment on a money demand will be dismissed where it affirmatively appears from the record, taken as a whole, that the amount actually in dispute is not sufficient to give this court jurisdiction. *Gray* v. *Blanchard*, 564.

PRE-EMPTION. See *Mexican Land-Grants*.

A "*bona fide* pre-emption claimant" is one who has settled upon lands subject to pre-emption, with the intention to acquire them, and who, in order to perfect his right to them, has complied, or is proceeding to comply, in good faith with the requirements of the pre-emption laws. *Hosmer* v. *Wallace*, 575.

PRESUMPTION. See *Constitutional Law*, 8; *Contracts*, 3; *Death, Presumption of; Jurisdiction*, 4; *Letters-patent*, 8.

PRIMA FACIE CASE. See *Jurisdiction*, 1, 2.

PRIVATE LAND-CLAIMS. See *French and Spanish Land-Grants; Mexican Land-Grants*.

PROBABLE CAUSE, CERTIFICATE OF.

A., a collector of internal revenue, seized certain whiskey belonging to B., for the condemnation and forfeiture whereof proceedings were afterwards, at the suit of the United States, brought in the proper court. The court rendered a judgment dismissing them, and "it appearing that the seizure, though improperly made, was made by his superior officer, the supervisor," ordered that a certificate of probable cause be issued to A. B. brought trespass against the supervisor. *Held*, 1. That the certificate was a bar to the suit. 2. That the motive of the court for granting it makes no part of the record, and should not have been recited therein. *Stacey* v. *Emery*, 642.

PROCESS. See *Foreclosure*, 2; *Jurisdiction*, 13; *Tax, Enforcement of the Payment thereof*, 5.

PROCLAMATION OF THE PRESIDENT. See *Intercourse and Trade*, 1.

PROFITS. See *Infringement*, 1–8; *Letters-patent*, 16.

PROPERTY. See *Assignee in Bankruptcy*, 1.

PROPERTY, USE OF. See *States, Police Power of*.

PUBLIC ADMINISTRATOR.

The statute of Missouri of 1868 (1 Wagner's Stat., ed. 1872, p. 122, sect. 8) does not authorize a suit by a public administrator in that State against a foreign insurance company doing business there, to enforce

PUBLIC ADMINISTRATOR (*continued*)
the payment of a policy of insurance, not made or to be executed in that State, upon the life of a citizen of Wisconsin, who neither resided, died, nor left any estate in Missouri. *Insurance Company* v. *Lewis*, 682.

PUBLIC LANDS. See *Land-Grant Railroads; Mexican Land-Grants; Swamp and Overflowed Lands.*

PUBLIC MORALS. See *States, Police Power of*, 1–4.

PUBLIC OFFICER. See *Bond*, 2.

PUBLIC SAFETY. See *States, Police Power of*, 1–4.

PUBLIC USE. See *Letters-patent*, 9, 10.

PUIS DARREIN CONTINUANCE. See *Practice*, 7.

PURCHASER. See *Payment.*

RAILROAD COMPANY. See *Alabama; Court of Equity; Municipal Bonds*, 1; *Subscriptions to Stock; Taxation, Exemption from.*

REASONABLE SECURITY. See *Clearance.*

REBELLION, THE. See *Clearance; Constitutional Law*, 7–11; *Criminal Law*, 1–5; *Intercourse and Trade.*

1. Cotton owned by a British subject, although he never came to this country, was, if found during the rebellion within the Confederate territory, a legitimate subject of capture by the forces of the United States, and the title thereto was transferred to the government as soon as the property was reduced to firm possession. *Young* v. *United States*, 39.
2. Within two years after the rebellion closed, if he had given no aid or comfort thereto, he could, under the act of March 12, 1863 (12 Stat. 820), have maintained a suit in the Court of Claims, to recover the proceeds of his cotton so captured which were paid into the treasury. *Id.*
3. If he furnished munitions of war and supplies to the Confederate government, or did any acts which would have rendered him liable to punishment for treason had he owed allegiance to the United States, he gave aid and comfort to the rebellion, within the meaning of that act, and was thereby excluded from the privileges which it confers. *Id.*
4. By giving such aid and comfort, he committed, in a criminal sense, no offence against the United States, and he was therefore not included in the pardon and amnesty granted by the proclamation of the President of Dec. 25, 1868 (15 Stat. 711). *Id.*
5. A., a resident of Adams County, Mississippi, whose cotton was there burnt by B., in May, 1862, brought an action for its value against the latter, who set up as a defence that that State, whereof he was at that date a resident, was then in subjection to and under the control of the "Confederate States;" that an act of their congress,

REBELLION, THE (*continued*).

approved March 6, 1862, declared that it was the duty of all military commanders in their service to destroy all cotton whenever, in their judgment, the same should be about to fall into the hands of the United States; that, in obedience to that act, the general commanding the forces in Mississippi issued an order, directed to officers under his command in that State, to burn all cotton along the Mississippi River likely to fall into the hands of the forces of the United States; that the provost-marshal of the county was charged with executing within it that order; that A.'s cotton was likely to fall into the hands of the United States; that the provost-marshal ordered and required B. to burn it; and that B. did burn it, in obedience to the said act and the orders of the commanding general and provost-marshal. *Held*, 1. That the said act, as a measure of legislation, can have no force in any court recognizing the Constitution of the United States as the supreme law of the land. 2. That it did not assume to confer upon such commanders any greater authority than they, by the laws and usages of war, were entitled to exercise. 3. That the orders, as an act of war, exempted from responsibility a soldier of the Confederate army who executed them, at the suit of the owner of such cotton, who, at the time of its destruction, was a voluntary resident within the lines of the insurrection. 4. That the plea should, upon demurrer, be deemed as sufficiently averring the existence of such relations between B. and the Confederate military authorities as entitled him to make the same defence as if he had been such soldier. *Ford* v. *Surget*, 594.

RECEIVERS. See *Court of Equity*.

RECITALS IN MUNICIPAL BONDS, EFFECT OF. See *Municipal Bonds*, 1, 2; *Pleading*, 2.

RECONVEYANCE. See *Swamp and Overflowed Lands*, 1.

RECORD. See *Bill of Exceptions; Jurisdiction*, 10, 13; *Practice*, 11; *Probable Cause, Certificate of.*

The doings of a county court of Missouri can be shown only by its record. *County of Macon* v. *Shores*, 272.

REFEREES.

1. The power, with the consent of the parties, to appoint referees, and refer to them a pending cause, is incident to all judicial administration, where the right exists to ascertain the facts as well as to pronounce the law. *Newcomb* v. *Wood*, 581.
2. Any issues in an action, whether they be of fact or of law, may be so referred by sect. 281 of the Code of Ohio. *Id.*
3. A party who goes to trial before referees, without requiring an oath to be administered to them, waives any objection to the omission of such oath. *Id.*

REFEREES (*continued*).

4. The fact that an award was signed by only two of three referees was not called to the attention of the court when their report was confirmed and judgment rendered thereon. *Held*, that it furnished no ground for reversing the judgment. *Id.*

REPEAL. See *Tax, Enforcement of the Payment thereof*, 4.

1. A recital in a statute, that a former statute was repealed or superseded by subsequent acts, is not conclusive as to such repeal or supersedure. Whether a statute was so repealed is a judicial, not a legislative question. *United States* v. *Claflin*, 546.
2. A statute covering the whole subject-matter of a former one, adding offences and varying the procedure, operates not cumulatively, but by way of substitution, and, therefore, impliedly repeals it. In the absence of any repealing clause, it is, however, necessary to the implication of a repeal that the objects of the two statutes are the same. If they are not, both statutes will stand, though they refer to the same subject. *Id.*
3. The second section of the act of Congress of March 3, 1823 (3 Stat. 781), entitled "An Act to amend an act entitled 'An Act further to regulate the entry of merchandise imported into the United States from any adjacent territory,'" was supplied by the fourth section of the act of July 18, 1866 (14 id. 179), and thereby repealed. *Stockwell* v. *United States* (13 Wall. 531) reviewed. *Id.*

RESIGNATION. See *Officer of the Army*.

REVISED STATUTES OF THE UNITED STATES.

The following sections referred to and explained:—

Sect. 2504. See *Imports, Duties on*, 1.
Sect. 3082. See *Smuggling*, 2.
Sect. 3477. See *Claims against the United States*.

REVOCATION OF ACCEPTANCE OF A RESIGNATION. See *Officer of the Army*.

REWARD. See *Bailment*, 1.

ROYALTY. See *Infringement*, 2.

SALE. See *Bankruptcy*, 2; *Mortgage*, 2.

SECOND ASSESSMENT. See *Internal Revenue*, 9.

SECRETARY OF THE TREASURY. See *Clearance*, 1, 2; *Collector of Customs*.

SEIZURE. See *Imports, Duties on*, 2; *Internal Revenue*, 1–5.

SETTLEMENT. See *Mexican Land-Grants*.

SHARES OF STOCK, TRANSFER OF. See *Corporation*, 1, 2.

SHIPPER. See *Clearance*, 1.

SMOKING-TOBACCO. See *Internal Revenue*, 1, 2.

SMUGGLING.

1. An action of debt cannot be maintained by the United States to recover the penalties prescribed by the fourth section of the act of Congress approved July 18, 1866 (14 Stat. 179), entitled "An Act to prevent smuggling, and for other purposes." That act contemplated a criminal proceeding and not a civil remedy. *United States* v. *Claflin*, 546.
2. Nor does sect. 3082 of the Revised Statutes authorize a civil action. *Id.*

SOUTH CAROLINA. See *Limitations, Statute of*, 1; *Parties.*

SPECIAL ASSESSMENTS. See *District of Columbia*, 4.

SPECIE PAYMENTS. See *Jurisdiction*, 8.

SPECIFICATIONS. See *Letters-patent*, 11, 20–22.

STATE COURTS, APPELLATE JURISDICTION OF THIS COURT OVER JUDGMENTS AND DECREES OF. See *Jurisdiction*, 3, 5.

STATES, POLICE POWER OF. See *Constitutional Law*, 1–5, 14.

1. Where, by the application of the invention or discovery for which letters-patent have been granted by the United States, tangible property comes into existence, its use is, to the same extent as that of any other species of property, subject, within the several States, to the control which they may respectively impose in the legitimate exercise of their powers over their purely domestic affairs, whether of internal commerce or of police. *Patterson* v. *Kentucky*, 501.
2. A party to whom such letters-patent were, in the usual form, issued for "an improved burning oil," whereof he claimed to be the inventor, was convicted in Kentucky for there selling that oil. It had been condemned by the State inspector as "unsafe for illuminating purposes," under a statute requiring such inspection, and imposing a penalty for selling or offering to sell within the State oils or fluids, the product of coal, petroleum, or other bituminous substances, which can be used for such purposes, and which have been so condemned. It was admitted on the trial that the oil could not, by any chemical combination described in the specification annexed to the letters-patent, be made to conform to the standard prescribed by that statute. *Held*, that the enforcement of the statute interfered with no right conferred by the letters-patent. *Id.*

STATUTE OF FRAUDS. See *Frauds, Statute of.*

STATUTE OF LIMITATIONS. See *Limitations, Statute of.*

STATUTE, REPEAL OF. See *Repeal.*

STATUTES OF THE UNITED STATES. See *Revised Statutes of the United States.*

The following, among others, commented on and explained:—

1799. March 2. See *Collector of Customs.*
1799. March 2. See *Imports, Duties on*, 3.

STATUTES OF THE UNITED STATES (*continued*).

1823. March 3. See *Repeal*, 3.
1824. May 26. See *French and Spanish Land-Grants*, 1.
1850. Sept. 27. See *Donation Act*.
1850. Sept. 28. See *Swamp and Overflowed Lands*, 1.
1853. Feb. 26. See *Assignee in Bankruptcy*, 2.
1854. July 17. See *Donation Act*.
1857. March 3. See *Swamp and Overflowed Lands*, 2.
1860. June 22. See *French and Spanish Land-Grants*, 1, 2, 4, 6.
1862. May 20. See *Clearance*, 1.
1862. July 1. See *Land-Grant Railroads*, 1–4.
1863. Feb. 26. See *Claims against the United States*.
1863. March 3. See *Criminal Law*, 1.
1863. March 12. See *Rebellion, The*, 2, 3.
1864. July 2. See *Intercourse and Trade*, 2.
1864. July 2. See *Land-Grant Railroads*, 2–4.
1865. March 3. See *Internal Revenue*, 2, 4.
1866. July 3. See *Land-Grant Railroads*, 3.
1866. July 13. See *Internal Revenue*, 1, 2.
1866. July 18. See *Repeal*, 3.
1866. July 18. See *Smuggling*, 1.
1866. July 23. See *Mexican Land-Grants*, 5.
1866. July 26. See *Land-Grant Railroads*, 5.
1872. June 1. See *New Trial*.
1874. June 20. See *District of Columbia*, 2.
1875. March 3. See *Internal Revenue*, 6.
1878. June 19. See *District of Columbia*, 4.

STIPULATION. See *Bond*, 1; *Infringement*, 3.

STOCK, TRANSFER OF. See *Corporation*.

STOCKHOLDERS. See *Estoppel*, 1; *Jurisdiction*, 3.

STOLEN PROPERTY. See *Bailment*, 1.

SUBSCRIPTIONS TO STOCK. *See Municipal Bonds*, 1.

Sect. 14, art 11, of the Constitution of Missouri of 1865, did not take away from a county the authority, which had been previously conferred by statute, to subscribe for stock in a railroad company. *County of Macon* v. *Shores*, 272.

SUPERVISOR OF INTERNAL REVENUE. See *Probable Cause, Certificate of*.

SWAMP AND OVERFLOWED LANDS.

The legislature of Iowa having, by an act passed Feb. 2, 1853, granted to the counties in which the same were respectively situated the swamp and overflowed lands to which the State was entitled under the act of Congress of Sept. 28, 1850 (9 Stat. 519), the county of Wright presented its claim to the Department of the Interior. Having been informed by A., its agent, that the same had been rejected, and that,

SWAMP AND OVERFLOWED LANDS (*continued*).

under the ruling adopted, but little hope remained of its final allowance, the county, July 9, 1862, through its board of supervisors, entered into a contract with the American Emigrant Company to convey to it "all the swamp and overflowed lands of said county, and all the proceeds thereof, and claim for the same on the United States and all other parties," the company agreeing, in payment therefor, to spend $500 in such public improvements in the county as the board should require, to take the lands subject to the provisions of the said act of Congress and the existing laws of Iowa, and to release the State and the county from any liability to reclaim the lands. The contract was submitted to the vote of the county, and eighty-nine out of the ninety votes which were cast were in favor of affirming it. Neither the supervisors nor the voters knew the nature or the value of what they were selling. The company was informed in regard to both, and it withheld the information from the county officers. Subsequently, A., who had become the agent of the company, and was then acting in its interest, procured the reversal of the former ruling of the department, presented the renewed claim of the county, and secured an allowance of several hundred acres of unsold lands in place, $981 in money, and scrip for about six thousand acres in lieu of swamp lands which had been sold by the United States. Jan. 7, 1867, the county, in fulfilment of the contract, conveyed to the company, by deed, a large quantity of lands. The county, in 1870, no improvements having been made, filed this bill, praying for the annulment and cancellation of the contract, for a reconveyance of the lands, saving the rights of intermediate purchasers, and for an accounting, so far as the company had sold said lands, or received money on account of swamp lands due the county. *Held*, 1. That the fact that all the parties knew that they were dealing with a trust-fund devoted by the donor to a specific purpose demanded the utmost good faith on the part of the company. 2. That, in view of the provision for the diversion of the fund, the gross inadequacy of the compensation, and the successful speculation at the expense of the rights of the public, the county is entitled to the relief prayed. *Emigrant Company* v. *County of Wright*. 339.

2. The act of March 8, 1857 (11 Stat. 251), confirmed to the several States their selections of swamp lands, which had then been reported to the Commissioner of the General Land-Office, so far as the lands were then "vacant and unappropriated, and not interfered with by an actual settlement" under existing laws. *Martin* v. *Marks*, 345.

3. The selections so confirmed could not be set aside, nor could titles to any of the land which they embraced, unless it came within the exceptions mentioned in that act, be thereafter conveyed by the United States to parties claiming adversely to the swamp-land grant. *Id.*

TAX. See *Constitutional Law*, 12, 13; *Internal Revenue*, 1-4, 6.

TAX, ENFORCEMENT OF THE PAYMENT THEREOF.

1. In March and July, 1867, A. entered into contracts with the city of Memphis to pave certain streets. Most of the work was done after the passage of an act of the legislature of Tennessee of Dec. 3, 1867, by which contiguous territory was annexed, and designated as the ninth and tenth wards of the city, but none of it was done in them. An act of the legislature of Dec. 1, 1869, declared that the people residing within the limits of them should not be taxed to pay any part of the city debt contracted prior to the passage of said act of 1867. In March, 1875, A., in whose favor a decree against the city for the money due him for work done under his contracts had been rendered, obtained a *mandamus* commanding the city to levy a tax for its satisfaction. *Held*, 1. That the debt which the decree represents was contracted in March and July, 1867. 2. That the purpose of the act of 1869 was to relieve that territory from municipal obligations previously incurred for objects in which it had no interest when the obligations were assumed, and in regard to which it had no voice. 3. That no contract relation ever existed between A. and the people of that territory. 4. That the act of 1869 interfered, therefore, with no vested rights, impaired the obligation of no contract, and violated no provision of the Constitution of that State in regard to taxation. *United States* v. *Memphis*, 284.
2. The action of the court below, in excluding from the operation of the *alias* writ of *mandamus* the property on which the assessments by the front foot for the cost of the pavement had been paid, having been had in compliance with the petition of A., he cannot be permitted to complain of it here. *Id.*
3. Whether the basis of the levy was to be the assessment of 1875 or that of 1876 is a matter of no importance. The rights of A. were secured by the requirement of the writ, that the city should levy a tax sufficient to yield to him the sum therein mentioned. *Id.*
4. On March 16, 1875, A. obtained a decree against Memphis for the payment to him of $292,133.47, for materials furnished and work done under contracts entered into with that city in 1867 for paving certain streets. Execution having been issued, and returned unsatisfied, the court, on the 22d of that month, awarded an alternative writ of *mandamus*, to compel the city to exercise the power conferred by an act of the legislature passed March 18, 1873, and levy "a tax, in addition to all taxes allowed by law," sufficient to pay the decree. The city answered that said act had been repealed by one passed March 20, 1875, and that the tax which, by the act of Feb. 13, 1854, it was authorized to levy for all purposes had been levied, and its powers were therefore exhausted. A. demurred to the answer; the demurrer was sustained, and the writ made peremptory March 30, 1875. The act passed March 20, 1875, was approved by the gov-

TAX, ENFORCEMENT OF THE PAYMENT THEREOF (*continued*).

ernor of the State on the twenty-third day of that month. *Held*, 1. That the repealing act did not become a law until its approval by the governor. 2. That prior thereto, A., by his decree and the alternative *mandamus*, which was a proceeding commenced by virtue of the act of March 18, 1873, had acquired a vested right, which was not defeated by the repealing act, to have a tax, payable in lawful money, levied sufficient to pay him, although it required the levy of a tax beyond the rate mentioned in the act of 1854. *Memphis* v. *United States*, 293.

5. A., having a decree against the city of Memphis for the payment of money, obtained in March, 1875, a *mandamus*, commanding her to levy upon all the taxable property of the city a tax sufficient in amount to pay the decree. The city thereupon passed an ordinance levying a special tax, in professed conformity with the writ. A., finding that such special tax did not include merchants' capital, which, under the laws of the State, was taxable for general purposes, and that the required sum would not be raised, moved for a further peremptory *mandamus*, commanding that such merchants' capital, as assessed and returned for taxation for the year 1875, be included by the city within the property to be taxed for the payment of his decree, in accordance with the original writ. The court awarded the writ accordingly. *Held*, that the *mandamus* to compel the city to levy and collect the tax for the payment of the decree was process in execution, and that the court below rightfully exercised control over it in deciding that its order to levy a tax upon all the property of the city included the capital of merchants taxable under the laws of the State for general purposes. *Memphis* v. *Brown*, 300.

TAXATION, EXEMPTION FROM. See *District of Columbia*, 1, 2.

1. A provision in the charter of a railroad company that "the capital stock of said company shall be for ever exempt from taxation, and the road, with all its fixtures and appurtenances, including workshops, machinery, and vehicles of transportation, shall be exempt from taxation for the period of twenty years from the completion of the road, and no longer," does not, after the expiration of that period, exempt from taxation the road, with its fixtures, &c., although the same were purchased with or represented by capital. *Railroad Companies* v. *Gaines*, 697.

2. In 1875, the State of Tennessee enacted a railroad tax law, the eleventh section of which provided that a railroad company accepting that section as a special amendment to its charter, and paying annually to the State one and one-half per cent on its gross receipts, should be exempt from other provisions of the act, and that such payment should be in full of all taxation. A company whose char-

TAXATION, EXEMPTION FROM (*continued*).

ter, granted in 1846, exempted from taxation its capital stock for ever, and its road, fixtures, &c., for a specific period, which expired March 28, 1877, accepted the provisions of that section, and paid, for 1875 and 1876, the required percentage. That section having been declared by the Supreme Court of the State to be unconstitutional, it was repealed by an amendment, passed in 1877, which required such companies as had accepted and complied with its provisions to be assessed anew under the other sections of the act of 1875, credit to be given for sums paid by them, and any excess to be refunded. In a suit by the company to restrain the assessment and collection of the tax, — *Held*, that the Constitution of 1870, as construed by the highest judicial authority in the State, required all property to be uniformly taxed; and hence the legislature could not, in 1875, bind the State not to tax the company otherwise than as that section provides, upon the surrender by the company of its charter exemptions. Said amendment, so far as it subjected the property to taxation after March 28, 1877, did not, therefore, impair the obligation of a contract. *Id.*

3. A., a railroad company, was by its charter invested, "for the purpose of *making and using said road*, with all the powers, rights, and privileges, and subject to all the disabilities and restrictions, that have been conferred and imposed upon" company B. The latter was by its charter exempt from taxation upon its capital stock for ever, and upon its road, fixtures, &c., for a term of years. *Held*, that the grant to A. did not include immunity from taxation. *Id.*

TAXES. See *Constitutional Law*, 7–11; *District of Columbia*, 2; *Payment.*

TENNESSEE. See *Constitutional Law*, 7–11; *Criminal Law*, 1–5; *Tax, Enforcement of the Payment thereof*, 1; *Taxation, Exemption from*; *Vested Rights.*

In Tennessee, an act passed by the legislature does not become a law until its approval by the governor. *Memphis* v. *United States*, 293.

TITLE. See *French and Spanish Land-Grants.*

TOBACCO. See *Internal Revenue*, 1–8.

TRADE AND INTERCOURSE. See *Intercourse and Trade.*

TRANSPORTATION. See *Contracts*, 4.

TREASON. See *Rebellion, The*, 3, 4.

TRIAL. See *Referees*, 1.

TRUST. See *Estoppel*, 1.

TRUSTEE. See *Jurisdiction*, 6.

TRUST-FUND. See *Court of Equity; Swamp and Overflowed Lands*, 1.

UNAVOIDABLE ACCIDENT. See *Contracts*, 2.

USURY.

In order to sustain the defence of usury when a contract is, on its face, for legal interest only, there must be proof that there was some corrupt agreement, device, or shift to cover usury, and that it was in full contemplation of the parties. *Hotel Company* v. *Wade*, 18.

VERDICT. See *Practice*, 9.

VESSEL, CHARTER OF. See *Contracts*, 2, 3.

VESTED RIGHTS. See *Constitutional Law*, 5; *Tax*, *Enforcement of the Payment thereof*, 1, 4.

1. Vested rights acquired by a creditor under and by virtue of a statute of a State granting new remedies, or enlarging those which existed when the debt was contracted, are beyond the reach of the legislature, and the repeal of the statute will not affect them. *Memphis* v *United States*, 293.
2. Sect. 49 of the Code of Tennessee, declaratory of the law of that State respecting the effect of repealing statutes, is in accord with this doctrine. *Id.*

VOLUNTARY PAYMENT. See *Payment.*

WAIVER. See *Referees*, 4.

A party who goes to trial before referees, without requiring an oath to be administered to them, waives any objection to the omission of such oath. *Newcomb* v. *Wood*, 581.

WITNESS. See *Evidence*, 4.

WORDS.

"Beyond the Seas." See *Limitations, Statute of*, 2.

"*Bona fide* Pre-emption Claimant." See *Pre-emption.*

"Sold." See *French and Spanish Land-Grants*, 6.

"Sold or otherwise Disposed of." See *French and Spanish Land-Grants*, 6.

"Sold or Removed for Sale." See *Internal Revenue*, 3.

WRIT OF ERROR. See *New Trial; Practice*, 11.

University Press: Printed by John Wilson & Son, Cambridge.